AU OPTRONICS CORPORATION

Specification for Approval

INCOMING INSPECTION STANDARD FOR 24.0" TFT-LCD MODULES (A grade)

Model Name: G240 Series

Approved By	Prepared By
Hunglin Tsai	Yenchun Fu

General Display Business Unit/AU Optronics

Customer	Checked and Approved by
	開發部 2023.07.20 發行

For ACMEPOINT internal use only - provided by yichenchung on 2018/07/18

Revision History				
Rev.	**Date**	**Page**	**Old Inspection Spec**	**New Inspection Spec**
0	2011.Feb. 28	All		Initial Specification
1	2013.Sep.01	All		1. Format changed 2. Add drawing in item3. Inspection sampling method for MIL-STD-105E. 3. Modification: item6.1 Electrical inspection specification,add the criteria for small BP and Image retention. 4.Modification: Item6.2 Appearance inspection specification.
2	2016.Mar. 24	All		New version
3.	2018.July 18	8	6.2 Number definition is wrong	Modify 6.2 Number definition

_(Note 1) The revised inspection criteria is effective before the expiration of the IIS as specified

開發部
2023.07.20
發行
鉅緯科技開發股份有限公司

For ACMEPOINT internal use only - provided by yichenchung on 2018/07/18

AUO Confidential For ACMEPOINT Internal Use Only 20180718 18:04:02

1. Scope:

1.1 The incoming inspection standards shall be applied to TFT-LCD Modules (hereinafter called ""Modules"") that supplied by AU Optronics Corporation (hereinafter called ""seller"").

1.2 Specifications contains

- Electrical inspection specification
- Appearance specification
- Outside dimension specification

2. Incoming inspection:

The buyer (customer) shall inspect the modules within twenty calendar days since the delivery date (the ""inspection period"") at its own cost. The results of the inspection (acceptance or rejection) shall be recorded in writing, and a copy of this writing will be promptly sent to the seller.

The buyer may, under commercially reasonable reject procedures, reject an entire lot in the delivery involved. Within the inspection period,if the samples of modules within a lot show a number of unacceptable defects in accordance with this incoming inspection standards, the buyer must notify the seller in writing of any such rejection promptly, and not later than within three business days in the end of the inspection period.

Should the buyer fail to notify the seller within the inspection period, the buyer''s right to reject the modules shall be lapsed and the modules shall be deemed to have been accepted by the buyer.

3. Inspection sampling method:

Unless otherwise agree in writing, the method of incoming inspection shall be based on MIL-STD-105E.

3.1 Lot size: Quantity per shipment lot per model.

3.2 Sampling type: Normal inspection, single sampling.

3.3 Sampling level: Level II.

3.4 Acceptable quality level (AQL):

Major defect: AQL=1.0%.

Minor defect: AQL=2.5%.

Rig.1: Inspection Sampling standard for MIL-STD-105E :

表14-1 MIL-STD-105E 樣本代字

批量	特殊檢驗水準				一般檢驗水準		
	S-1	S-2	S-3	S-4	I	II	III
2～8	A	A	A	A	A	A	B
9～15	A	A	A	A	A	B	C
16～25	A	A	B	B	B	C	D
26～50	A	B	B	C	C	D	E
51～90	B	B	C	C	C	E	F
91～150	B	B	C	D	D	F	G
151～280	B	C	D	E	E	G	H
281～500	B	C	D	E	F	H	J
501～1,200	C	C	E	F	G	J	K
1,201～3,200	C	D	E	G	H	K	L
3,201～10,000	C	D	F	G	J	L	M
10,001～35,000	C	D	F	H	K	M	N
35,001～150,000	D	E	G	J	L	N	P
150,001～500,000	D	E	G	J	M	P	Q
500,000以上	D	E	H	K	N	Q	R

開發部
2023.07.20
發行
鈺緯科技開發股份有限公司

For ACMEPOINT internal use only - provided by yichenchung on 2018/07/18

Rig.2 Incoming inspection judgment method :

表14-2 MIL-STD-105E正常檢驗單次抽樣計畫

樣本代字	樣本數	允收品質水準（AQL・%） 0.010	0.015	0.025	0.040	0.065	0.10	0.15	0.25	0.40	0.65	1.0	1.5	2.5	4.0	6.5	10	15	25	40	65	100	150	250	400	650	1000
		Ac Re	Ac Re	Ac Re	Ac Re	Ac Re	Ac Re	Ac Re	Ac Re	Ac Re	Ac Re	Ac Re	Ac Re	Ac Re	Ac Re	Ac Re	Ac Re	Ac Re	Ac Re	Ac Re	Ac Re	Ac Re	Ac Re	Ac Re	Ac Re	Ac Re	Ac Re
A	2	↓	↓	↓	↓	↓	↓	↓	↓	↓	↓	↓	↓	↓	↓	0 1	↓	↓	1 2	2 3	3 4	5 6	7 8	10 11	14 15	21 22	30 31
B	3	↓	↓	↓	↓	↓	↓	↓	↓	↓	↓	↓	↓	↓	0 1	↓	↓	1 2	2 3	3 4	5 6	7 8	10 11	14 15	21 22	30 31	44 45
C	5	↓	↓	↓	↓	↓	↓	↓	↓	↓	↓	↓	↓	0 1	↑	↑	1 2	2 3	3 4	5 6	7 8	10 11	14 15	21 22	30 31	44 45	↑
D	8	↓	↓	↓	↓	↓	↓	↓	↓	↓	↓	↓	0 1	↑	↓	1 2	2 3	3 4	5 6	7 8	10 11	14 15	21 22	30 31	44 45	↑	↑
E	13	↓	↓	↓	↓	↓	↓	↓	↓	↓	↓	0 1	↑	↓	1 2	2 3	3 4	5 6	7 8	10 11	14 15	21 22	30 31	44 45	↑	↑	↑
F	20	↓	↓	↓	↓	↓	↓	↓	↓	↓	0 1	↑	↓	1 2	2 3	3 4	5 6	7 8	10 11	14 15	21 22	↑	↑	↑	↑	↑	↑
G	32	↓	↓	↓	↓	↓	↓	↓	↓	0 1	↑	↓	1 2	2 3	3 4	5 6	7 8	10 11	14 15	21 22	↑	↑	↑	↑	↑	↑	↑
H	50	↓	↓	↓	↓	↓	↓	↓	0 1	↑	↓	1 2	2 3	3 4	5 6	7 8	10 11	14 15	21 22	↑	↑	↑	↑	↑	↑	↑	↑
J	80	↓	↓	↓	↓	↓	↓	0 1	↑	↓	1 2	2 3	3 4	5 6	7 8	10 11	14 15	21 22	↑	↑	↑	↑	↑	↑	↑	↑	↑
K	125	↓	↓	↓	↓	↓	0 1	↑	↓	1 2	2 3	3 4	5 6	7 8	10 11	14 15	21 22	↑	↑	↑	↑	↑	↑	↑	↑	↑	↑
L	200	↓	↓	↓	↓	0 1	↑	↓	1 2	2 3	3 4	5 6	7 8	10 11	14 15	21 22	↑	↑	↑	↑	↑	↑	↑	↑	↑	↑	↑
M	315	↓	↓	↓	0 1	↑	↓	1 2	2 3	3 4	5 6	7 8	10 11	14 15	21 22	↑	↑	↑	↑	↑	↑	↑	↑	↑	↑	↑	↑
N	500	↓	↓	0 1	↑	↓	1 2	2 3	3 4	5 6	7 8	10 11	14 15	21 22	↑	↑	↑	↑	↑	↑	↑	↑	↑	↑	↑	↑	↑
P	800	↓	0 1	↑	↓	1 2	2 3	3 4	5 6	7 8	10 11	14 15	21 22	↑	↑	↑	↑	↑	↑	↑	↑	↑	↑	↑	↑	↑	↑
Q	1250	0 1	↑	↓	1 2	2 3	3 4	5 6	7 8	10 11	14 15	21 22	↑	↑	↑	↑	↑	↑	↑	↑	↑	↑	↑	↑	↑	↑	↑
R	2000	↑	↑	1 2	2 3	3 4	5 6	7 8	10 11	14 15	21 22	↑	↑	↑	↑	↑	↑	↑	↑	↑	↑	↑	↑	↑	↑	↑	↑

↓ ＝採用箭頭下第一個抽樣計畫，如樣本大小等於或超過批量時，則用全數檢驗。
↑ ＝採用箭頭上第一個抽樣計畫。*Ac*＝允收數，*Re*＝拒收數。

4. Inspection instruments:

4.1 Pattern generator: LD-2000 or equivalent model.

4.2 Video board: AU video board or equivalent. The output of the signal should comply with the specification provided by AU.

4.3 Luminance colorimeter: Topcon BM-7 or equivalent model

5. Inspection environment conditions:

5.1 Room temperature : **20 ~ 25** C.

5.2 Humidity: **65±5**% RH.

5.3 Illumination: Fluorescent light (Day-Light Type) display surface illumination to be **300 ~ 700** lux. (standard **500** lux.)

5.4 To be a distance about **35 ± 5** cm in front of LCD unit, viewing line should be perpendicular to the surface of the module judge the visual appearance with human's eyes.

5.5 Take off the protector of polarizer while judging the display area.

開發部 2023.07.20 發行

For ACMEPOINT internal use only - provided by yichenchung on 2018/07/18

5.6 If there is any question while judging, check the panel again while operating.

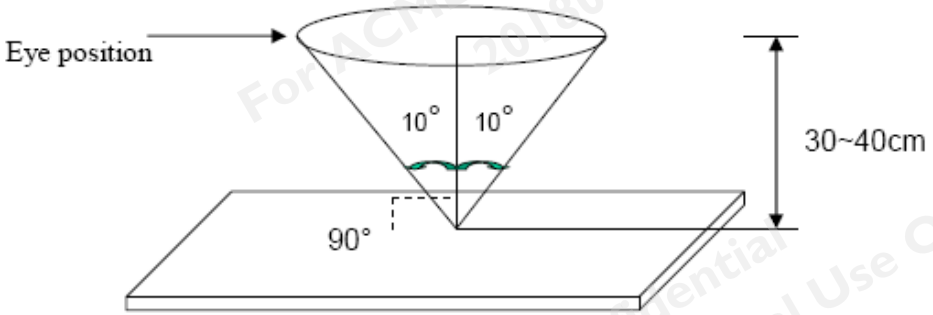

6. Classification of defects:

Defects are classified as major defects and minor defects according to the degree of defectiveness defined herein.

Major defects:

A major defect is a defect that is likely to result in failure, or to reduce materially the usability of the product for its intended purpose.

Minor defects:

A minor defect is either a defect that is not likely to reduce materially the usability of the product for its intended purpose, or a departure from an intended purpose with little bearing on the effective use or operation of the product.

6.1 Electrical inspection specification:

Inspection Item		Specification
Line defect		Not allowed
Bright dots		≦0 dot
Dark dots		≦5 dots
Total dots defect		≦5 dots
Continuous defect	Two continuous bright dots :	Not allowed
	Over three continuous bright dots (vertical, horizontal, oblique) :	Not allowed
	Two continuous dark dots (vertical, horizontal, oblique) :	≦1 pair
	Over three continuous dark dots (vertical, horizontal, oblique) :	Not allowed
	Two continuous dark dots and bright dots (vertical, horizontal, oblique) :	Not allowed
	Over three continuous dots (vertical, horizontal, oblique) :	Not allowed
	Distance between 2 Bright dots :	Not allowed

For ACMEPOINT internal use only - provided by yichenchung on 2018/07/18

	Distance between 2 Dark dots :	≥ 5 mm
	Distance between Dark dot and Bright Dot :	Not allowed
Mura		5% ND filter

Note 1) For dot defect, one sub pixel is defined as one dot. Defect area (of dot defect) should be larger than 1/2 area of one sub-pixel to be count as 1 dot defect.

Note 2) Judgment criteria (For Bright dot and Small Bright dot) : Using ND Filter 5% (distance : 30 cm). If it could be observed, dot defines as one bright dot. If not, dot defines as one small bright dot.

ND filter use method: The inspection method of ND Filter - holding ND filter in front of the panel around 5 cm and examine the panel from **35±5** cm in the front view for **3** seconds.

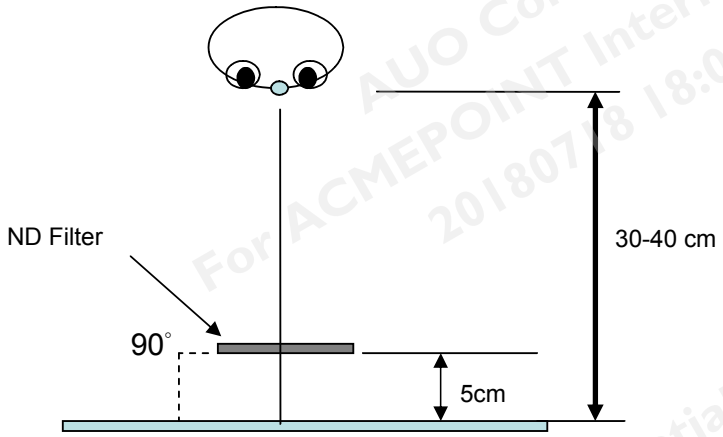

Note 3) A dot defect that is smaller than the defined dot defect will be treated as small bright dot.

The drawing of 1/2 area sub-pixel definition: The 1/2 area sub-pixel can be defined as below one or more of specific shapes (Fig.1). The small bright dots is less than or equal to 5 dots.



Fig.1

Note 4) All bright dot defects should not be noticeable by observer under specified inspection environment (Please refer to item 5).

Note 5) Adjacent-dot defect should be observed under the same display pattern in any one of Black/Green/Blue/Red pattern.

Definition of two continuous bright dots: Only for two continuous dots (included vertical, horizontal, oblique type)

*Inspection pattern: Standard inspection patterns of dot defect are listed below. AU uses these patterns as standard

For ACMEPOINT internal use only - provided by yichenchung on 2018/07/18

criteria for judging dot defect. Please inform AU if any other pattern is to be used to examine dot defect.

Test Pattern	Defect
Black	For bright dot(s)
Red	For bright and dark dot(s)
Green	For bright and dark dot(s)
Blue	For bright and dark dot(s)

Note 6) In three (or more) adjacent dot defect, for any 3rd dot that adjacent to 2 continuous defective dots (can be of any combination of bright dots and dark dots), the 3rd dot, no matter how large it may be, should be viewed as a dot.

Note 7) Defect criteria diagram

- Dot defect diagram

One dot (Bright /Dark)

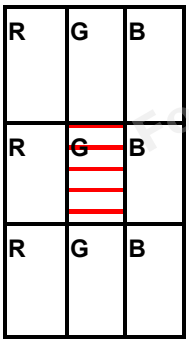

Two continuous dots(Bright/Dark)

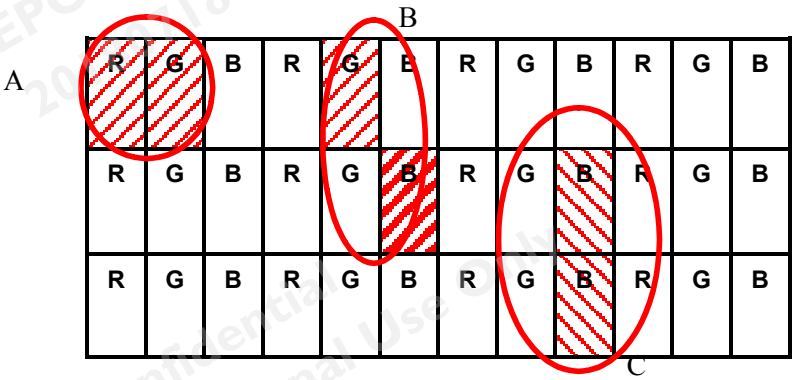

- Definition of distance between defect dots as following

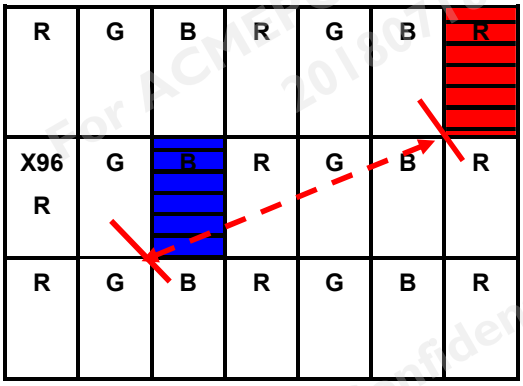

A: Distance between defect dots

Defect Dot

Note 8) Unless otherwise specified by written document or limit samples, Mura (display un-uniformity) should inspected under the ND filter and shall be accepted when it is invisible 5% ND filter is applied.

開發部 2023.07.20 發行

For ACMEPOINT internal use only - provided by yichenchung on 2018/07/18

Note 9) While operating over 50℃ ambient temperature, there should be no function failure occur and Mura (display un-uniformity) should be invisible under 1% ND filter applied.

Note 10) Image Retention: 5secs Test pattern and Image sticking must be disappeared in 5secs after pattern changed.

6.2 Inspection specification

Judge area	Judge item		Inspection specification			Judge criterion	
						Major	Minor
Active area	Particles,	Circular	**Average diameter: D (mm)** **Distance: ND(mm)**		**Numbers**		○
			D≦0.2		N= Disregarded, ND= Disregarded		
			0.2＜D≦0.8		N≦3, ND= Disregarded		
			D>0.8		N=0		
		Linear	**Width: W (mm)** **Length: L (mm)**		**Numbers**		○
			W≦0.15	-	N= Disregarded, ND= Disregarded		
			0.15＜W≦0.2	L≦ 5.0	N≦3, ND= Disregarded		
			0.2＜W	5.0＜L	N=0		
	Scratch/Dent	Circular	**Average diameter: D (mm)**		**Numbers**		○
			D<0.2		N= Disregarded , ND= Disregarded		
			0.2≦D<0.8		N≦4 ND= Disregarded		
			0.80≦D		N=0		
		Linear	**Width: W (mm)** **Length: L (mm)**		**Numbers**		○
			W≦0.10	-	N= Disregarded , ND= Disregarded		
			0.10<W≦0.2mm	L≦10mm	N≦4 ND= Disregarded		
			W>0.2mm	L>10mm	N=0		
	Bubble	Circular	**Average diameter: D (mm)**		**Numbers**		○
			D≦0.2		N= Disregarded, ND= Disregarded		
			0.2<D≦0.5		N≦3, ND= Disregarded		
			D>0.5		N=0		
Bezel	Gap between front and back bezel on all sides		W ≦ 1.0 mm				○

開發部 2023.07.20 發行 宸鴻科技開發股份有限公司

For ACMEPOINT internal use only - provided by yichenchung on 2018/07/18

	Scratches, Wrap and Sunken	Allowed (No harm, dangerous)		○
	Assembly Fail	Not allowed	○	
	Color Difference	Allowed (No harm, dangerous)		○
Carton and Panel Label (S/N, B/L, WEEK)	No label	Not allowed	○	
	Invert label		○	
	Broken		○	
	Dirt	No larger than 30mm×20mm.	○	
	Not clear	Word can be read. Barcode can be scanned.		○
	Word out of shape			○
	Content Error	No allowed	○	
	Position	Be attached on right position		○
	Crease	Allowed (Word can be read. Barcode can be scanned)	○	
	Label overlapping	Allowed	○	
Screw	Not enough (Q'ty)	No allowed	○	
	Loose	No allowed	○	
Connector	Appearance	No broken, rising, deformation	○	

Note 1 : When L>=2W, defect count as liner defect.

Note 2: D=(W+L)/2

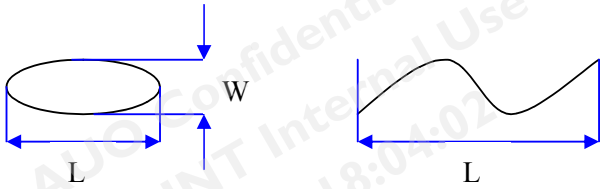

Note 3 : Extraneous substances which can be wiped out, such as fingerprint and particles are not considered as a defect.

Note 4 : Defects on the Black Matrix (outside Active Area 0.3mm) are not considered as a defect.

7. Inspection judgement:

7-1 The judgement of the shipped lot (acceptance or rejection) should follow the sampling plan of MIL-STD-105E, single sampling, normal inspection, level II.

7-2 If the number of defects is equal to or less than the applicable acceptance level, the lot shall be accepted.

7-3 If the number of defects is more than the applicable acceptance level, the lot shall be rejected and the buyer should inform the seller of the result of incoming inspection in writing

8 Precaution:

For ACMEPOINT internal use only - provided by yichenchung on 2018/07/18

Please pay attention to the following items when you use the LCD Module with back-light unit.

1. Do not twist or bend the module and prevent the unsuitable external force for display module during assembly.
2. Adopt measures in adequately ventilated environment. Be sure to use the module in the specified temperature range.
3. Avoid dust or oil mist during assembly.
4. Follow the correct power sequence while operating. Do not apply the invalid signal, otherwise, it will cause improper shut down and damage the module.
5. Try to avoid the electrical magnetic interference, and it will be more safety and less noise.
6. Please operate module in suitable temperature. The response time & brightness will drift by different temperature.
7. Avoid displaying the fixed pattern (exclude the white pattern) in a long period, otherwise, it will cause image sticking.
8. Be sure to turn off the power when connecting or disconnecting the circuit.
9. Display surface Polarizer scratches easily, please avoid dirt and stains carefully.
10. A dewdrop may lead to destruction. Please wipe off any moisture before using module.
11. Sudden temperature changes cause condensation, and it will cause polarizer damaged.
12. High temperature and humidity may degrade performance. Please do not expose the module to the direct sunlight and so on.
13. Avoid any acid or chlorine compounds, which are harmful to the LCD module.
14. Static electricity will damage the modules; please do not touch the module without any grounded device connected.
15. Do not disassemble and reassemble the module by self.
16. Do not touch the rear side directly to avoid the electrical shock by the backlight high voltage.
17. Avoid strong vibration or shock. or it will cause the module broken.
18. Store the modules in suitable environment with regular packing.
19. Be careful of injury from a broken display module. Please avoid the pressure adding to the surface (front or rear side) of modules, because it will cause the non-uniformity or other function issue to display.

AU Optronics Corp.
No. 1, Li-Hsin Rd. II,
Science-Based Industrial Park,
Hsin-Chu City, Taiwan, R.O.C.Tel :886-3-500-8800
Fax:886-3-666-9320

開發部
2023.07.20
發行
鈺緯科技開發股份有限公司

For ACMEPOINT internal use only - provided by yichenchung on 2018/07/18