



設計驗證
工程課
2024-04-30
發行
鈺華科技開發股份有限公司

亨悅工業(股)公司

Hand Well Enterprise CO., LTD.

樣品承認書

APPROVAL SHEET

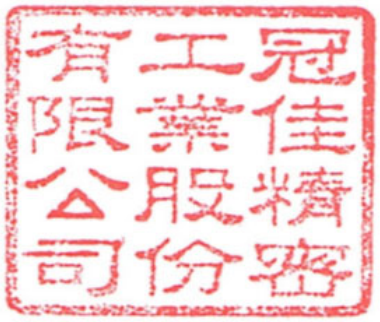

客　　戶: 鈺緯科技
(Customer Name)

料　　號: 3MD362ME210
(Parts Number)

品　　名: BUTTOM BRACKET
(Parts Name)

日　　期: 2024/04/25
(Date)



送樣數量: 30 PCS
(Sample Quantity)

The Table of Contents

No.	Content	Ready "V"
01	客戶圖面 Drawing	V
02	首樣檢驗報告 FAI Report	V
03	材質證明 Material Certificate	V
04	SECC SGS Report	V

(End)

亨悅工業股份有限公司

樣品尺寸檢驗報告

CUSTOMER 客戶	鈺緯		DATE OF Manufacture 製造日期		2024/4/24
PART NAME 品名(英文)	BUTTOM BRACKET(TR 50)		DATE OF INSP 檢驗日期		2024/4/25
P/N 品號	3MD362ME210		MATERIAL 材質		SECC 1.0T
SURFACE TREAT 表面處理	無		成品數量	30	
PRINTING 印刷	無		抽樣數量	5	
Measuring Instrument 使用儀器	A:游標卡尺 B:高度規 C:角度規 D:分厘卡 E:孔規 F:投影机 G:R角規 H:牙規 I:量測儀器 J:外觀目視 K:檢驗治具(螺柱位置)				

No	Location 位置	Specification 圖面尺寸	SAMPLE READING 量測記錄							
			1	2	3	4	5	RE-SULT	MI	備註
1	E6	126.5±0.5	126.51	126.55	126.65	126.53	126.63	OK	A	
2	E3	26±0.3	26.04	26.08	26.07	26.03	25.99	OK	A	
3	F7	9±0.15	8.98	8.97	9.03	9.02	8.96	OK	A	
4	E3	11±0.1	10.98	10.97	11.03	11.01	10.97	OK	A	
5	D4	R1.0	OK	OK	OK	OK	OK	OK	G	
6	C3	10±0.1	10.03	10.02	10.01	10.01	10.01	OK	A	
7	C4	1.5±0.1	1.53	1.51	1.47	1.53	1.53	OK	A	
8	B4	R3.0	OK	OK	OK	OK	OK	OK	G	
9	B4	3.5±0.1	3.53	3.51	3.50	3.50	3.49	OK	A	
10	B6	5±0.1	5.01	5.01	4.97	5.02	4.98	OK	A	
11	B6	R4.75	OK	OK	OK	OK	OK	OK	G	
12	D6	78±0.15	77.97	78.05	77.97	77.96	78.03	OK	A	
13	C3	26±0.1	26.01	26.02	25.98	26.01	26.00	OK	A	
14	D6	ϕ3.2	OK	OK	OK	OK	OK	OK	E	
15	E6	ϕ3.5	OK	OK	OK	OK	OK	OK	E	
16	F6	5.2±0.1	5.17	5.18	5.22	5.17	5.21	OK	A	
17	G5	35±0.15	34.97	35.02	35.03	35.04	34.96	OK	A	
18	G5	18±0.1	18.03	18.01	18.02	17.97	18.00	OK	A	
19	G4	R1.6	OK	OK	OK	OK	OK	OK	G	
20										
21										
22										
23										
24										
25										

主管	檢驗者
湯昊丞	呂錫泰

REV.	DATE	DESCRIPTION	BY	APVD
-	2023-04-17	ES SAMPLE VERSION	Laslie	-
0	2024-02-26	RELEASE FOR PRODUCTION	Laslie	

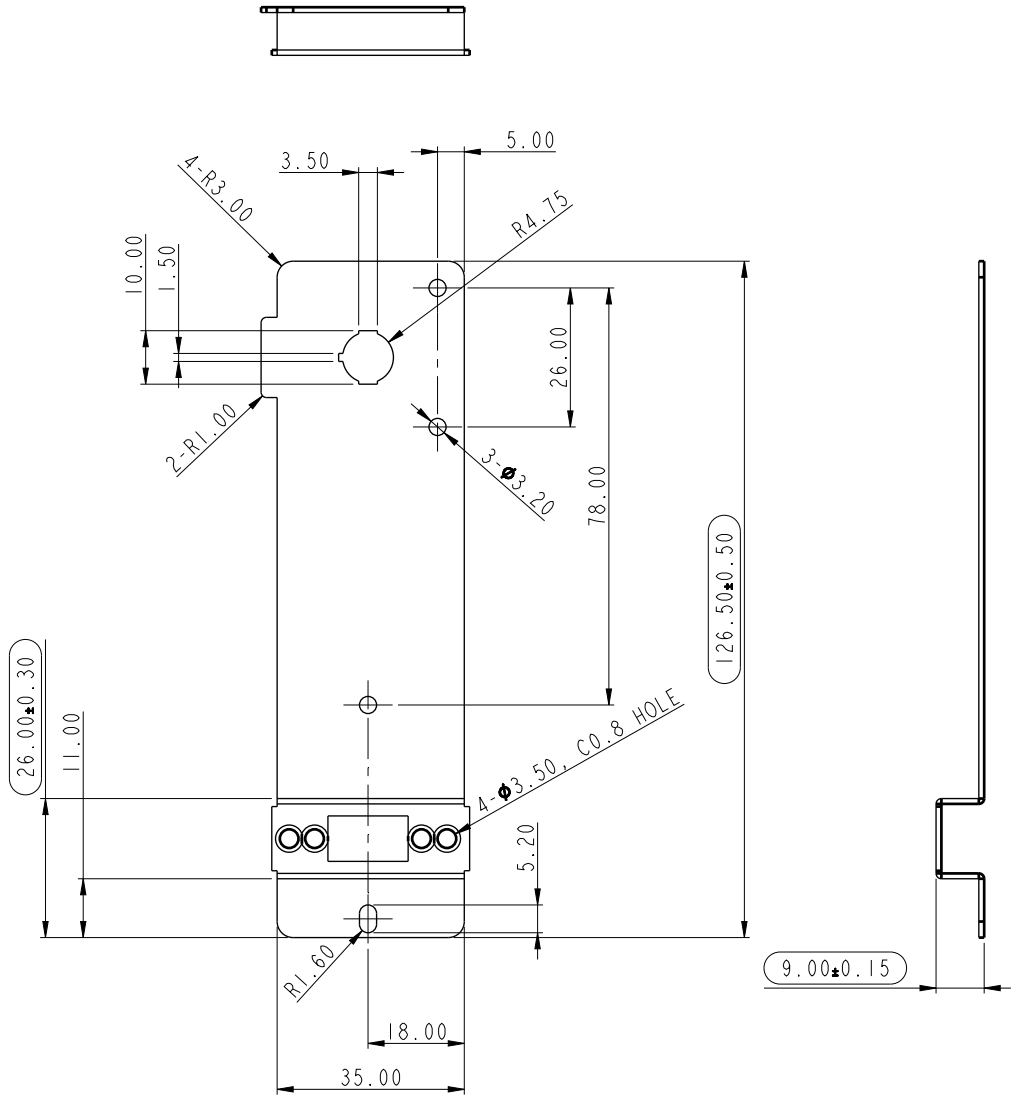

NOTE:
1. Material: SECC t=1.0
2. ◯ Inspection dimension.
3. Unspecified Dimension refer to CAD Drawing file.
4. RoHS Compliant.
5. DIVA QC Inspection Document NO.: QWI-014

設計驗證
工程課
2024-04-30
發行
鈺緯科技開發股份有限公司

RANGE OF DIMENSION	TOLERANCE CLASS DESIGNATION f	V m	c
UP TO 30	±0.10	±0.20	±0.50
ABOVE 30~120	±0.15	±0.30	±0.80
ABOVE 120~315	±0.20	±0.50	±1.20
ABOVE 315~1000	±0.30	±0.80	±2.00
ANGLE	±1°	±1.75/1001	

THIRD ANGLE PROJECTION

DSGD by	Laslie	2023-04-17
CHK by	Ferris	2024-02-26
APVD by	Laslie	2024-02-26
APVD NO.:		

UNITS: mm | SCALE: 1/1 | SHEET: 1 OF 1 | MODEL NO.: TR 50
MATERIAL: SECC t=1.0 | TREATMENT:
PART NAME: BUTTOM BRACKET
PART NO.: 3MD362ME210 | REV. 0
3D FILE NAME: 00_BUTTON_BKT_MEDIRECO_3
DIVA Laboratories ,Ltd.

中國鋼鐵 CHINA STEEL

品質證明書
TEST CERTIFICATE

中國鋼鐵股份有限公司
CHINA STEEL CORPORATION
中華民國高雄市小港區中鋼路1號
1 CHUNG KANG ROAD HSIAO KANG, KAOHSIUNG 81223
TAIWAN, REPUBLIC OF CHINA
TEL:(07)802-1111 FAX:(07)802-2511, (07)801-9427
E-mail: t211mae@mail.csc.com.tw

F0151-01 COMPANY REGISTRATION NUMBER: 30414175 0437

客戶名稱 CUSTOMER	永發鋼鐵工業股份有限公司 YUNG FA STEEL & IRON INDUSTRY CO., LTD.			產品名稱 PRODUCT	EG SHEET-COIL
				發票號碼 INVOICE NO.	GZA8702476
				證明書編號 CERTIFICATE NO.	091103F0151
規格名稱 SPEC.	CSC SECC1-SD, ZINC COATING MASS: ZZ20/ZZ20 (20/20 G/M2), CHROMATE-FREE ANTI-FINGER PRINT TREATED (A/A), UNOILED. R-36			客戶編號 CUSTOMER NO.	35489006
				中鋼訂單編號 CSC ORDER NO.	DC3283A
				交運日期 SHIPPING DATE	NOV. 02, 2020
				證明書日期 T/C ISSUE DATE	NOV. 03, 2020
檢驗 INSP.	CSC MILL INSPECTION.	T/C	02	客戶訂單編號 CUST ORDER NO.	

項目 ITEM NO.	產品序號 LABEL NO.	尺寸 DIMENSIONS 厚度 THICK. mm	寬度 WIDTH mm	長度 LENGTH mm	數量 QTY	質量 MASS kg	爐號 HEAT	鋼捲號碼 COIL NO.	試片編號 SAMPLE ID.	拉伸試驗 *1 G.L. = 50 mm 降伏 Y.S. MPa, N/mm2	抗拉 T.S. MPa, N/mm2	伸長 EL %	*02 彎曲試驗	*05 硬度 RB	*12 單點上 g/m2	*13 單點下 g/m2
003	E757263	0.980	1219	COIL	1	10,735	4KB03	53758042	5375804	222	325	45.0	OK	45	18	18
	E757340	"	"	"	1	10,990	5HQ06	53399732	5339973	219	331	43.0	OK	47	18	18
	E757464	"	"	"	1	10,245	4K346	53764021	5376402	205	322	45.0	OK	45	18	18
	E757496	"	"	"	1	10,525	5HX47	55970451	5597045	205	326	42.0	OK	47	18	18
			TOTAL:		4	42,495										

化學成分 CHEMICAL COMPOSITION %

C	Mn	P	S	Si	Cu	Ni	Cr	Al	備註 REMARK
2 X10	2 X10	3 X10		2 X10				3 X10	
2	13	10	6	1				32	
2	15	15	11	1				37	
2	15	11	3	1				28	
2	15	14	6	Tr				41	

註釋 NOTES

*01 拉伸試驗 TENSILE TEST
*02 彎曲試驗 BEND TEST
*05 硬度試驗 HARDNESS TEST
*12 上表面鍍鋅量 UPPER COAT (SINGLE)
*13 下表面鍍鋅量 LOWER COAT (SINGLE)

1MPa = 1N/mm2
Al = TOTAL Al

Tr: TRACE ELEMENT WITH ITS CONTENT CONFORMING TO THE SPECIFICATION REQUIREMENTS.

SURVEYED BY

茲證明本表所列產品，均依材料規格製造及試驗，並符合規格之要求。
WE HEREBY CERTIFY THAT MATERIAL DESCRIBED HEREIN HAS BEEN MANUFACTURED AND TESTED WITH SATISFACTORY RESULTS IN ACCORDANCE WITH THE REQUIREMENT OF THE ABOVE MATERIAL SPECIFICATION.

Shon-Chin Huang

冶金技術處處長
GENERAL MANAGER, METALLURGICAL DEPARTMENT

測試報告
Test Report

號碼(No.): EKR23702128　　日期(Date): 15-Aug-2023　　頁數(Page) : 1 of 8

中國鋼鐵股份有限公司 (CHINA STEEL CORPORATION)
高雄市小港區中鋼路1號 (1 CHUNG KANG ROAD, HSIAO KANG, KAOHSIUNG 812401, TAIWAN, REPUBLIC OF CHINA)

以下測試樣品係由申請廠商所提供及確認 (The following sample(s) was/were submitted and identified by the applicant as)：

送樣廠商(Sample Submitted By)	:	中國鋼鐵股份有限公司 (CHINA STEEL CORPORATION)
樣品名稱(Sample Name)	:	電鍍鋅產品(ELECTRO-GALVANIZED PRODUCTS)
樣品型號(Style/Item No.)	:	無鉻耐指紋電鍍鋅鋼捲(ELECTRO-GALVANIZED COILS (COATING AFP))

==========

收件日(Sample Receiving Date)	:	31-Jul-2023
測試期間(Testing Period)	:	31-Jul-2023 to 15-Aug-2023

測試需求(Test Requested) : 依據客戶指定，參考RoHS 2011/65/EU Annex II及其修訂指令(EU) 2015/863測試鎘、鉛、汞、六價鉻、多溴聯苯、多溴聯苯醚, DBP, BBP, DEHP, DIBP。 (As specified by client, with reference to RoHS 2011/65/EU Annex II and amending Directive (EU) 2015/863 to determine Cadmium, Lead, Mercury, Cr(VI), PBBs, PBDEs, DBP, BBP, DEHP, DIBP contents in the submitted sample(s).)

測試結果(Test Results) : 請參閱下一頁 (Please refer to following pages.)

結　論(Conclusion) : 根據客戶所提供的樣品，其鎘、鉛、汞、六價鉻、多溴聯苯、多溴聯苯醚, DBP, BBP, DEHP, DIBP的測試結果符合RoHS 2011/65/EU Annex II暨其修訂指令(EU) 2015/863之限值要求。 (Based on the performed tests on submitted sample(s), the test results of Cadmium, Lead, Mercury, Cr(VI), PBBs, PBDEs, DBP, BBP, DEHP, DIBP comply with the limits as set by RoHS Directive (EU) 2015/863 amending Annex II to Directive 2011/65/EU.)

報告簽署人/張伯睿 博士/部經理
Ray Chang, Ph.D./ Department Manager
Signed for and on behalf of
SGS TAIWAN LTD.
化學實驗室-高雄/Chemical Laboratory-Kaohsiung

PIN CODE: B8D71B40

This document is issued by the Company subject to its General Conditions of Service printed overleaf, available on request or accessible at https://www.sgs.com.tw/terms-of-service and, for electronic format documents, subject to Terms and Conditions for Electronic Documents at https://www.sgs.com.tw/terms-of-service. Attention is drawn to the limitation of liability, indemnification and jurisdiction issues defined therein. Any holder of this document is advised that information contained hereon reflects the Company's findings at the time of its intervention only and within the limits of client's instruction, if any. The Company's sole responsibility is to its Client and this document does not exonerate parties to a transaction from exercising all their rights and obligations under the transaction documents. This document cannot be reproduced, except in full, without prior written approval of the Company. Any unauthorized alteration, forgery or falsification of the content or appearance of this document is unlawful and offenders may be prosecuted to the fullest extent of the law. Unless otherwise stated the results shown in this test report refer only to the sample(s) tested.

測試報告
Test Report

中國鋼鐵股份有限公司 (CHINA STEEL CORPORATION)
高雄市小港區中鋼路1號 (1 CHUNG KANG ROAD, HSIAO KANG, KAOHSIUNG 812401, TAIWAN, REPUBLIC OF CHINA)

測試部位敘述 (Test Part Description)

No.1 : 灰色金屬 (GRAY METAL)

測試結果 (Test Results)

測試項目 (Test Items)	測試方法 (Method)	單位 (Unit)	MDL	結果 (Result) No.1	限值 (Limit)
鎘 (Cd) (Cadmium (Cd))	依據IEC 62321-5: 2013，以感應耦合電漿發射光譜儀分析。(According to IEC 62321-5: 2013, analysis was performed by ICP-OES.)	mg/kg	2	n.d.	100
鉛 (Pb) (Lead (Pb))		mg/kg	2	n.d.	1000
汞 (Hg) (Mercury (Hg))	依據IEC 62321-4: 2013+ AMD1: 2017，以感應耦合電漿發射光譜儀分析。(According to IEC 62321-4: 2013+ AMD1: 2017, analysis was performed by ICP-OES.)	mg/kg	2	n.d.	1000
六價鉻 (Hexavalent Chromium) Cr(VI) (#2)	依據IEC 62321-7-1: 2015，以紫外光-可見光分光光度計分析。(According to IEC 62321-7-1: 2015, analysis was performed by UV-VIS.)	μg/cm²	0.1	n.d.	-
一溴聯苯 (Monobromobiphenyl)	參考IEC 62321-6: 2015自訂方法，以氣相層析儀/質譜儀分析。(With reference to IEC 62321-6: 2015 in house method, analysis was performed by GC/MS.)	mg/kg	5	n.d.	-
二溴聯苯 (Dibromobiphenyl)		mg/kg	5	n.d.	-
三溴聯苯 (Tribromobiphenyl)		mg/kg	5	n.d.	-
四溴聯苯 (Tetrabromobiphenyl)		mg/kg	5	n.d.	-
五溴聯苯 (Pentabromobiphenyl)		mg/kg	5	n.d.	-
六溴聯苯 (Hexabromobiphenyl)		mg/kg	5	n.d.	-
七溴聯苯 (Heptabromobiphenyl)		mg/kg	5	n.d.	-
八溴聯苯 (Octabromobiphenyl)		mg/kg	5	n.d.	-
九溴聯苯 (Nonabromobiphenyl)		mg/kg	5	n.d.	-
十溴聯苯 (Decabromobiphenyl)		mg/kg	5	n.d.	-
多溴聯苯總和 (Sum of PBBs)		mg/kg	-	n.d.	1000

This document is issued by the Company subject to its General Conditions of Service printed overleaf, available on request or accessible at https://www.sgs.com.tw/terms-of-service and, for electronic format documents, subject to Terms and Conditions for Electronic Documents at https://www.sgs.com.tw/terms-of-service. Attention is drawn to the limitation of liability, indemnification and jurisdiction issues defined therein. Any holder of this document is advised that information contained hereon reflects the Company's findings at the time of its intervention only and within the limits of client's instruction, if any. The Company's sole responsibility is to its Client and this document does not exonerate parties to a transaction from exercising all their rights and obligations under the transaction documents. This document cannot be reproduced, except in full, without prior written approval of the Company. Any unauthorized alteration, forgery or falsification of the content or appearance of this document is unlawful and offenders may be prosecuted to the fullest extent of the law. Unless otherwise stated the results shown in this test report refer only to the sample(s) tested.

測試報告
Test Report

中國鋼鐵股份有限公司 (CHINA STEEL CORPORATION)
高雄市小港區中鋼路1號 (1 CHUNG KANG ROAD, HSIAO KANG, KAOHSIUNG 812401, TAIWAN, REPUBLIC OF CHINA)

測試項目 (Test Items)	測試方法 (Method)	單位 (Unit)	MDL	結果 (Result) No.1	限值 (Limit)
一溴聯苯醚 (Monobromodiphenyl ether)	參考IEC 62321-6: 2015自訂方法，以氣相層析儀/質譜儀分析。(With reference to IEC 62321-6: 2015 in house method, analysis was performed by GC/MS.)	mg/kg	5	n.d.	-
二溴聯苯醚 (Dibromodiphenyl ether)		mg/kg	5	n.d.	-
三溴聯苯醚 (Tribromodiphenyl ether)		mg/kg	5	n.d.	-
四溴聯苯醚 (Tetrabromodiphenyl ether)		mg/kg	5	n.d.	-
五溴聯苯醚 (Pentabromodiphenyl ether)		mg/kg	5	n.d.	-
六溴聯苯醚 (Hexabromodiphenyl ether)		mg/kg	5	n.d.	-
七溴聯苯醚 (Heptabromodiphenyl ether)		mg/kg	5	n.d.	-
八溴聯苯醚 (Octabromodiphenyl ether)		mg/kg	5	n.d.	-
九溴聯苯醚 (Nonabromodiphenyl ether)		mg/kg	5	n.d.	-
十溴聯苯醚 (Decabromodiphenyl ether)		mg/kg	5	n.d.	-
多溴聯苯醚總和 (Sum of PBDEs)		mg/kg	-	n.d.	1000
鄰苯二甲酸二丁酯 (DBP) (Dibutyl phthalate (DBP))	依據IEC 62321-8: 2017，以氣相層析儀/質譜儀分析。(According to IEC 62321-8: 2017, analysis was performed by GC/MS.)	mg/kg	50	n.d.	1000
鄰苯二甲酸丁苯甲酯 (BBP) (Butyl benzyl phthalate (BBP))		mg/kg	50	n.d.	1000
鄰苯二甲酸二異丁酯 (DIBP) (Diisobutyl phthalate (DIBP))		mg/kg	50	n.d.	1000
鄰苯二甲酸二(2-乙基己基)酯 (DEHP) (Di-(2-ethylhexyl) phthalate (DEHP))		mg/kg	50	n.d.	1000

This document is issued by the Company subject to its General Conditions of Service printed overleaf, available on request or accessible at https://www.sgs.com.tw/terms-of-service and, for electronic format documents, subject to Terms and Conditions for Electronic Documents at https://www.sgs.com.tw/terms-of-service. Attention is drawn to the limitation of liability, indemnification and jurisdiction issues defined therein. Any holder of this document is advised that information contained hereon reflects the Company's findings at the time of its intervention only and within the limits of client's instruction, if any. The Company's sole responsibility is to its Client and this document does not exonerate parties to a transaction from exercising all their rights and obligations under the transaction documents. This document cannot be reproduced, except in full, without prior written approval of the Company. Any unauthorized alteration, forgery or falsification of the content or appearance of this document is unlawful and offenders may be prosecuted to the fullest extent of the law. Unless otherwise stated the results shown in this test report refer only to the sample(s) tested.

測試報告
Test Report

中國鋼鐵股份有限公司 (CHINA STEEL CORPORATION)
高雄市小港區中鋼路1號 (1 CHUNG KANG ROAD, HSIAO KANG, KAOHSIUNG 812401, TAIWAN, REPUBLIC OF CHINA)

備註(Note)：

1. mg/kg = ppm；0.1wt% = 0.1% = 1000ppm
2. MDL = Method Detection Limit (方法偵測極限值)
3. n.d. = Not Detected (未檢出)；小於MDL / Less than MDL
4. "-" = Not Regulated (無規格值)
5. (#2) =
   a. 當六價鉻結果大於0.13 μg/cm²，表示樣品表層含有六價鉻。(The sample is positive for Cr(VI) if the Cr(VI) concentration is greater than 0.13 μg/cm². The sample coating is considered to contain Cr(VI).)
   b. 當六價鉻結果為n.d. (濃度小於0.10 μg/cm²)，表示表層不含六價鉻。(The sample is negative for Cr(VI) if Cr(VI) is n.d. (concentration less than 0.10 μg/cm²). The coating is considered a non-Cr(VI) based coating)
   c. 當六價鉻結果介於 0.10 及 0.13 μg/cm² 時，無法確定塗層是否含有六價鉻。(The result between 0.10 μg/cm² and 0.13 μg/cm² is considered to be inconclusive - unavoidable coating variations may influence the determination.)
6. 除非另有說明，參照ILAC-G8:09/2019，採用簡單二元(w=0)允收規則進行符合性判定；根據此規則，符合性結果之判定係以測試結果與限值做比較。(Unless otherwise stated , the decision rule for conformity reporting is based on Binary Statement for Simple Acceptance Rule (w=0) stated in ILAC-G8:09/2019. According to this rule, the judgement of conformity is based on the comparing test results with limits.)
7. 申請人提交的產品是用於電機電子設備之原物料。(The product from the applicant submitted is a raw material which is used for electric and electronic equipment.)

This document is issued by the Company subject to its General Conditions of Service printed overleaf, available on request or accessible at https://www.sgs.com.tw/terms-of-service and, for electronic format documents, subject to Terms and Conditions for Electronic Documents at https://www.sgs.com.tw/terms-of-service. Attention is drawn to the limitation of liability, indemnification and jurisdiction issues defined therein. Any holder of this document is advised that information contained hereon reflects the Company's findings at the time of its intervention only and within the limits of client's instruction, if any. The Company's sole responsibility is to its Client and this document does not exonerate parties to a transaction from exercising all their rights and obligations under the transaction documents. This document cannot be reproduced, except in full, without prior written approval of the Company. Any unauthorized alteration, forgery or falsification of the content or appearance of this document is unlawful and offenders may be prosecuted to the fullest extent of the law. Unless otherwise stated the results shown in this test report refer only to the sample(s) tested.

中國鋼鐵股份有限公司 (CHINA STEEL CORPORATION)
高雄市小港區中鋼路1號 (1 CHUNG KANG ROAD, HSIAO KANG, KAOHSIUNG 812401, TAIWAN, REPUBLIC OF CHINA)

重金屬流程圖 / Analytical flow chart of Heavy Metal

根據以下的流程圖之條件，樣品已完全溶解。（六價鉻測試方法除外）
These samples were dissolved totally by pre-conditioning method according to below flow chart.
（Cr^{6+} test method excluded）

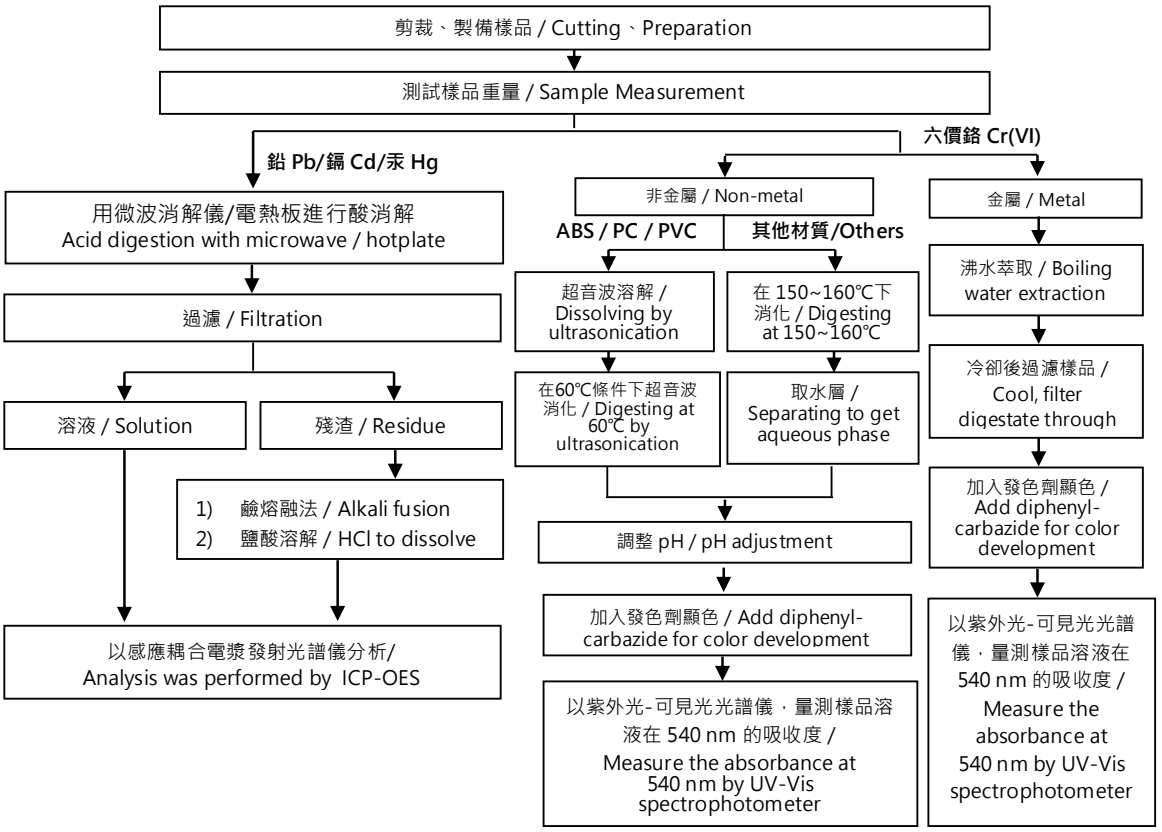

This document is issued by the Company subject to its General Conditions of Service printed overleaf, available on request or accessible at https://www.sgs.com.tw/terms-of-service and, for electronic format documents, subject to Terms and Conditions for Electronic Documents at https://www.sgs.com.tw/terms-of-service. Attention is drawn to the limitation of liability, indemnification and jurisdiction issues defined therein. Any holder of this document is advised that information contained hereon reflects the Company's findings at the time of its intervention only and within the limits of client's instruction, if any. The Company's sole responsibility is to its Client and this document does not exonerate parties to a transaction from exercising all their rights and obligations under the transaction documents. This document cannot be reproduced, except in full, without prior written approval of the Company. Any unauthorized alteration, forgery or falsification of the content or appearance of this document is unlawful and offenders may be prosecuted to the fullest extent of the law. Unless otherwise stated the results shown in this test report refer only to the sample(s) tested.

中國鋼鐵股份有限公司 (CHINA STEEL CORPORATION)
高雄市小港區中鋼路1號 (1 CHUNG KANG ROAD, HSIAO KANG, KAOHSIUNG 812401, TAIWAN, REPUBLIC OF CHINA)

多溴聯苯/多溴聯苯醚 分析流程圖 / PBB/PBDE analytical FLOW CHART

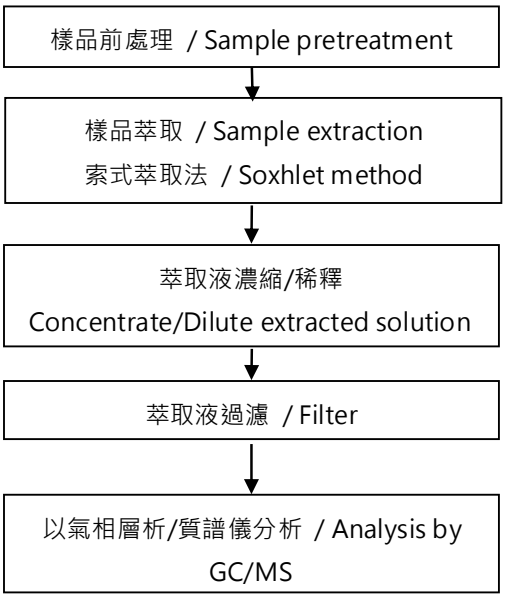

This document is issued by the Company subject to its General Conditions of Service printed overleaf, available on request or accessible at https://www.sgs.com.tw/terms-of-service and, for electronic format documents, subject to Terms and Conditions for Electronic Documents at https://www.sgs.com.tw/terms-of-service. Attention is drawn to the limitation of liability, indemnification and jurisdiction issues defined therein. Any holder of this document is advised that information contained hereon reflects the Company's findings at the time of its intervention only and within the limits of client's instruction, if any. The Company's sole responsibility is to its Client and this document does not exonerate parties to a transaction from exercising all their rights and obligations under the transaction documents. This document cannot be reproduced, except in full, without prior written approval of the Company. Any unauthorized alteration, forgery or falsification of the content or appearance of this document is unlawful and offenders may be prosecuted to the fullest extent of the law. Unless otherwise stated the results shown in this test report refer only to the sample(s) tested.

中國鋼鐵股份有限公司 (CHINA STEEL CORPORATION)
高雄市小港區中鋼路1號 (1 CHUNG KANG ROAD, HSIAO KANG, KAOHSIUNG 812401, TAIWAN, REPUBLIC OF CHINA)

可塑劑分析流程圖 / Analytical flow chart of phthalate content

【測試方法/Test method: IEC 62321-8】

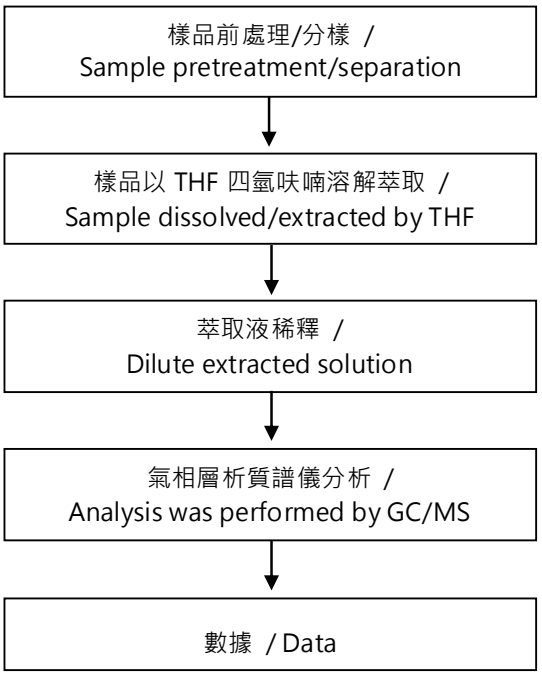

This document is issued by the Company subject to its General Conditions of Service printed overleaf, available on request or accessible at https://www.sgs.com.tw/terms-of-service and, for electronic format documents, subject to Terms and Conditions for Electronic Documents at https://www.sgs.com.tw/terms-of-service. Attention is drawn to the limitation of liability, indemnification and jurisdiction issues defined therein. Any holder of this document is advised that information contained hereon reflects the Company's findings at the time of its intervention only and within the limits of client's instruction, if any. The Company's sole responsibility is to its Client and this document does not exonerate parties to a transaction from exercising all their rights and obligations under the transaction documents. This document cannot be reproduced, except in full, without prior written approval of the Company. Any unauthorized alteration, forgery or falsification of the content or appearance of this document is unlawful and offenders may be prosecuted to the fullest extent of the law. Unless otherwise stated the results shown in this test report refer only to the sample(s) tested.

測試報告
Test Report

中國鋼鐵股份有限公司 (CHINA STEEL CORPORATION)
高雄市小港區中鋼路1號 (1 CHUNG KANG ROAD, HSIAO KANG, KAOHSIUNG 812401, TAIWAN, REPUBLIC OF CHINA)

*** 照片中如有箭頭標示，則表示為實際檢測之樣品/部位. ***
(The tested sample / part is marked by an arrow if it's shown on the photo.)

EKR23702128

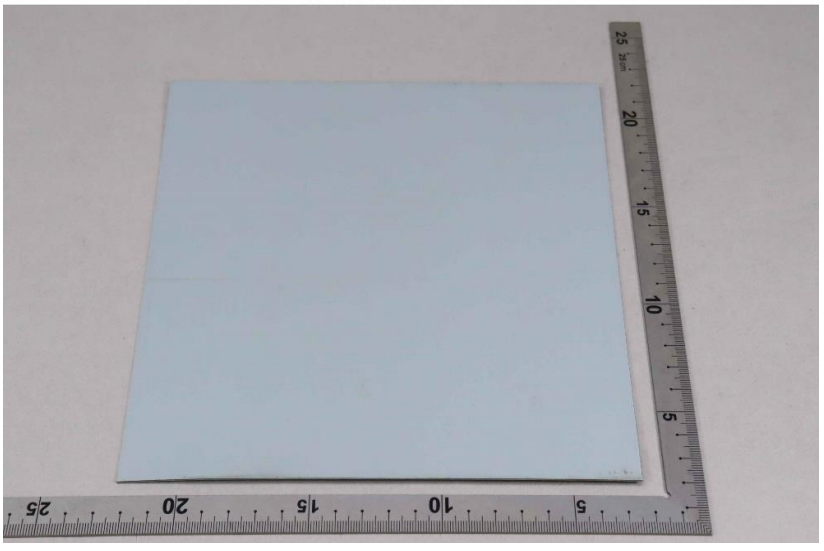

** 報告結尾 (End of Report) **

This document is issued by the Company subject to its General Conditions of Service printed overleaf, available on request or accessible at https://www.sgs.com.tw/terms-of-service and, for electronic format documents, subject to Terms and Conditions for Electronic Documents at https://www.sgs.com.tw/terms-of-service. Attention is drawn to the limitation of liability, indemnification and jurisdiction issues defined therein. Any holder of this document is advised that information contained hereon reflects the Company's findings at the time of its intervention only and within the limits of client's instruction, if any. The Company's sole responsibility is to its Client and this document does not exonerate parties to a transaction from exercising all their rights and obligations under the transaction documents. This document cannot be reproduced, except in full, without prior written approval of the Company. Any unauthorized alteration, forgery or falsification of the content or appearance of this document is unlawful and offenders may be prosecuted to the fullest extent of the law. Unless otherwise stated the results shown in this test report refer only to the sample(s) tested.