REV.	DATE	DESCRIPTION	BY	ARRD

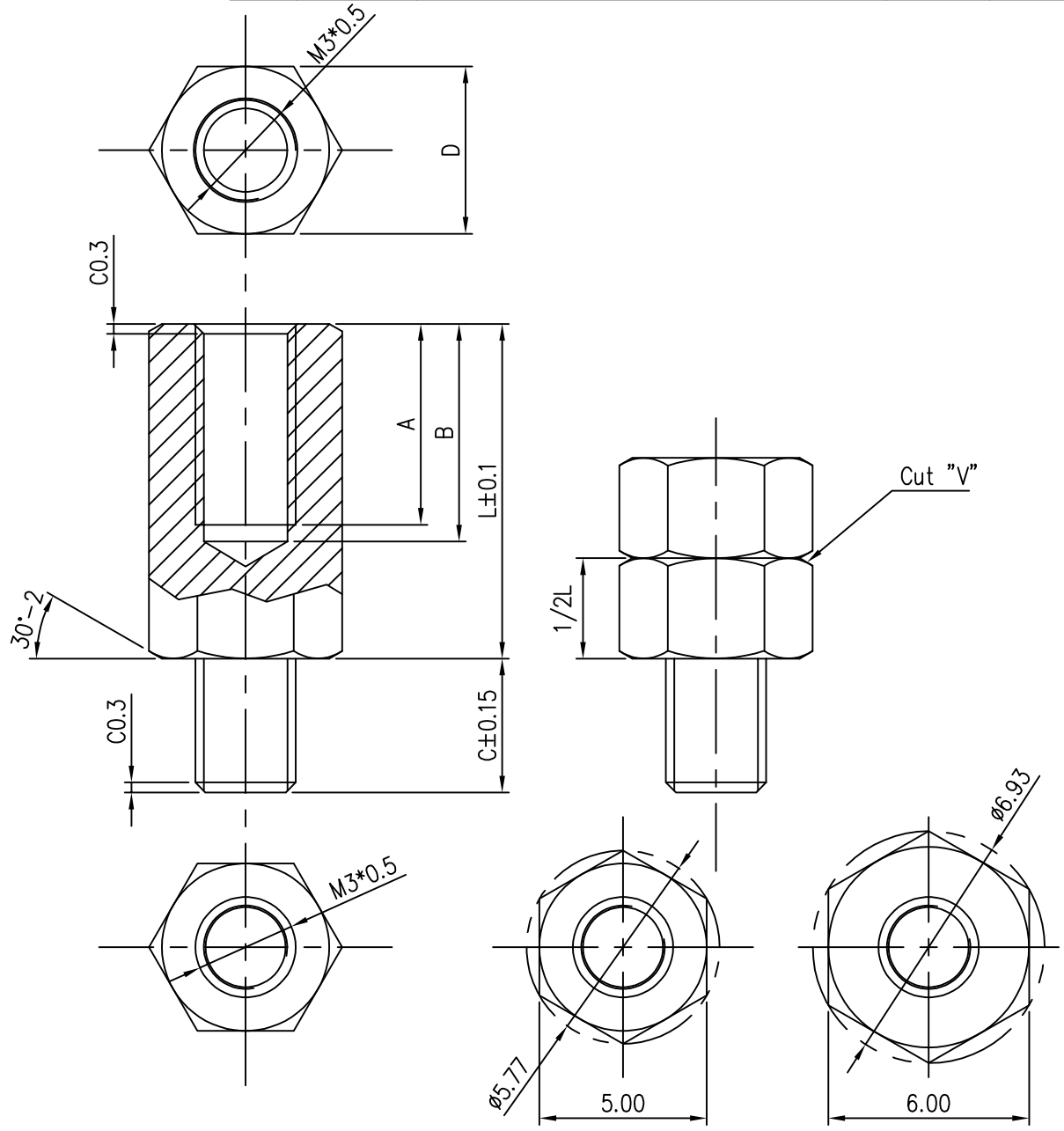

Part No.	A	B	C	D	L	Cut "V"	Material	Treatment	Approved No.
3MD380ME200	4.5	5.5	4.0	5.0	7.0	No	Brass(C3604)	Ni plated	M2663
3MD380ME110	4.5	5.5	4.0	5.0	7.0	No	Brass(C3600)	Degrease	M2663
3MDL29ME820	10.0	11.0	5.0	6.0	17.0	No	Brass(C3600)	Degrease	M2663
3MDL29ME800	6.0	7.0	3.0	5.0	20.0	No	SAE 1215	Ni plated	M1524
3MD001ME130	6.0	7.0	4.0	5.0	9.3	Yes	SAE 1215	Ni plated	M1524
3MDL29ME770	4.5	5.0	4.0	5.0	6.0	Yes	SAE 1215	Ni plated	M1524
3MDL29ME750	6.0	7.0	3.0	5.0	25.0	No	Brass(C3600)	Ni plated	M1944
3MDL29ME740	6.0	7.0	4.0	5.0	17.5	No	Brass(C3600)	Ni plated	M1334
3MDL29ME480	4.0	4.0	3.8	5.0	5.0	No	Brass(C3600)	Ni plated	M1333
3MDL29ME35A	6.0	7.0	4.0	5.0	10.0	No	SAE 1215	Ni plated	M1332

THIRD ANGLE PROJECTION	UNITS : mm	SCALE : 5 / 1	SHEET :1 / 1	MODEL NO.: Common
	MATERIAL : see notes		TREATMENT : see notes	
DSGD by Ferris Tsai	2024/05/13	PART NAME: STAND OFF (M3)		
APPD by		PART NO.: SEE NOTE		VER. 2
APPD No. : SEE NOTE	FILE NAME : stand-off_m3	DIVA Laboratories ,Ltd.		