* RoHS COMPLIANT *

✳ REVISIONS				
LTR	DESCRIPTION	DATE	REVISED	APPROVED

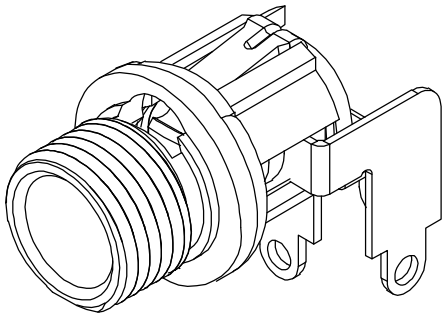

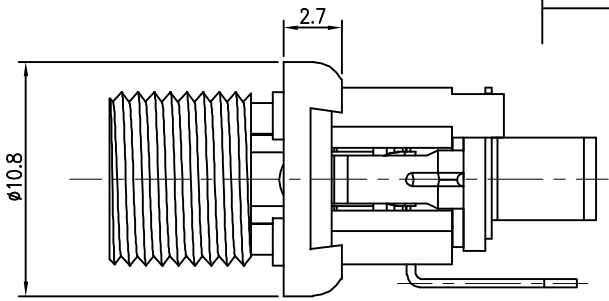

CAT NO.	PIN	SCHEMATIC
DCD-020-66LMA	ø2.0	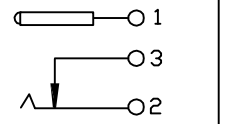
DCD-020-66LMB	ø2.5	

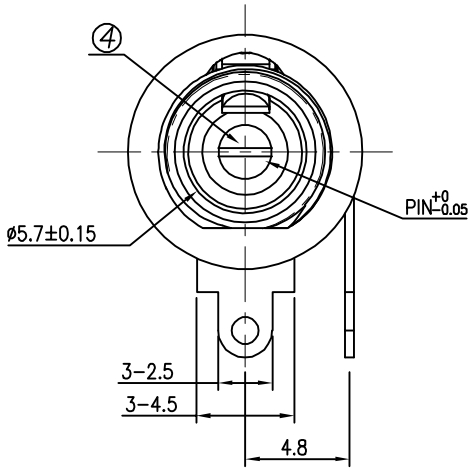

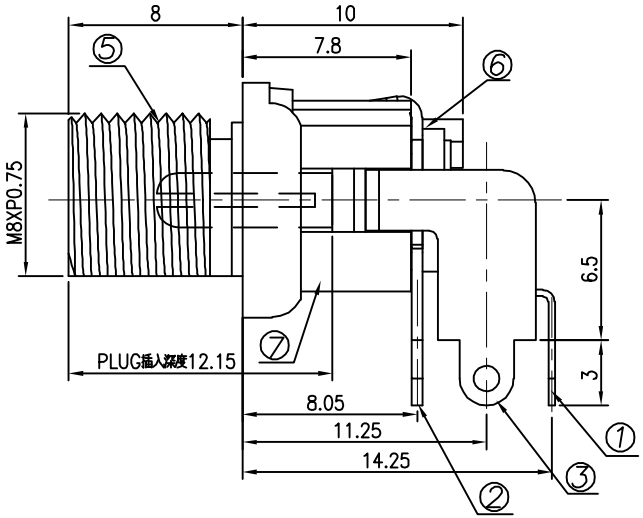

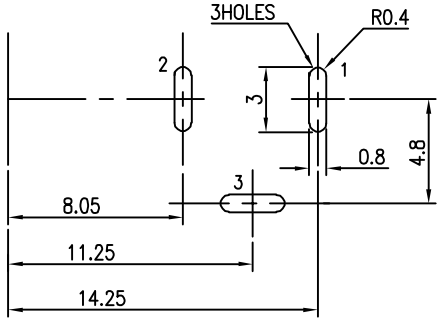

T:1.6 Dimensions of PC board holes

Tolerance : ±0.05(Printed-Top view)

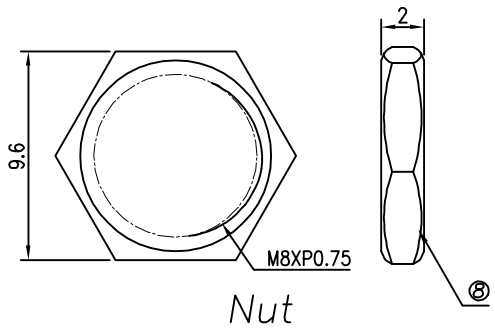

Nut

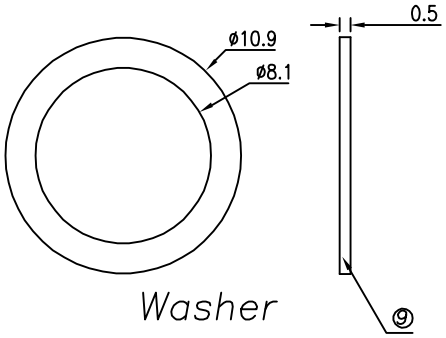

Washer

9	WASHER	1	SPCC	Ni PLATED
8	NUT	1	H59(COPPER ALLOY)	Ni PLATED
7	HOUSING	1	PBT 4815	UL-94V0(BLACK)
6	INSULATOR	2	PF	
5	AXIS SUPPORT	1	H59(COPPER ALLOY)	Ni PLATED
4	PIN	1	H59(COPPER ALLOY)	Ni PLATED
3	SHUNT TERMIANL	1	C2680	Sn PLATED
2	TIP SPRING	1	C5191	Sn PLATED
1	CENTER PIN TERMINAL	1	C2680	Sn PLATED
LTR	PART NAME	QTY	MATERIAL	REMARK

DWN	MOMO	DATE	2019.12.24	3RD ANGLE PROJECTION	NAME: DC POWER JACK
CHKD	ANDY	DATE	2019.12.24		CAT. NO.: DCD-020-66LM
APVD	JON	DATE	2019.12.24	UNIT: mm	
JKCR Electronics Co., Ltd.					DWN.NO.: F-020-66 004

UNLESS OTHERWISE SPECIFIED, TOLERANCE ON DECIMAL: ±0.3