5. Signal Timing Specification

5.1 Input Timing

5.1.1. Timing table

Timing Table (DE only Mode)

Signal	Item	Symbol	Min.	Typ.	Max	Unit
Vertical Section	Period	Tv	2200	2250	2715	Th
	Active	Tdisp (v)		2160		
	Blanking	Tblk (v)	40	90	555	Th
Horizontal Section	Period	Th	530	550	600	Tclk
	Active	Tdisp (h)		480		
	Blanking	Tblk (h)	50	70	120	Tclk
Clock	Frequency	Fclk=1/Tclk	66	74.25	77	MHz
Vertical Frequency	Frequency	Fv	47	60	63	Hz
Horizontal Frequency	Frequency	Fh	120	135	139.2	KHz

Notes:

(1) Display position is specific by the rise of DE signal only. Horizontal display position is specified by the rising edge of 1st DCLK after the rise of 1st DE, is displayed on the left edge of the screen.

(2) Vertical display position is specified by the rise of DE after a “Low” level period equivalent to eight times of horizontal period. The 1st data corresponding to one horizontal line after the rise of 1st DE is displayed at the top line of screen.

(3) If a period of DE “High” is less than 3840 DCLK or less than 2160 lines, the rest of the screen displays black.

(4) The display position does not fit to the screen if a period of DE “High” and the effective data period do not synchronize with each other.

4.1.2. Signal Timing Waveform

Two Section Mode

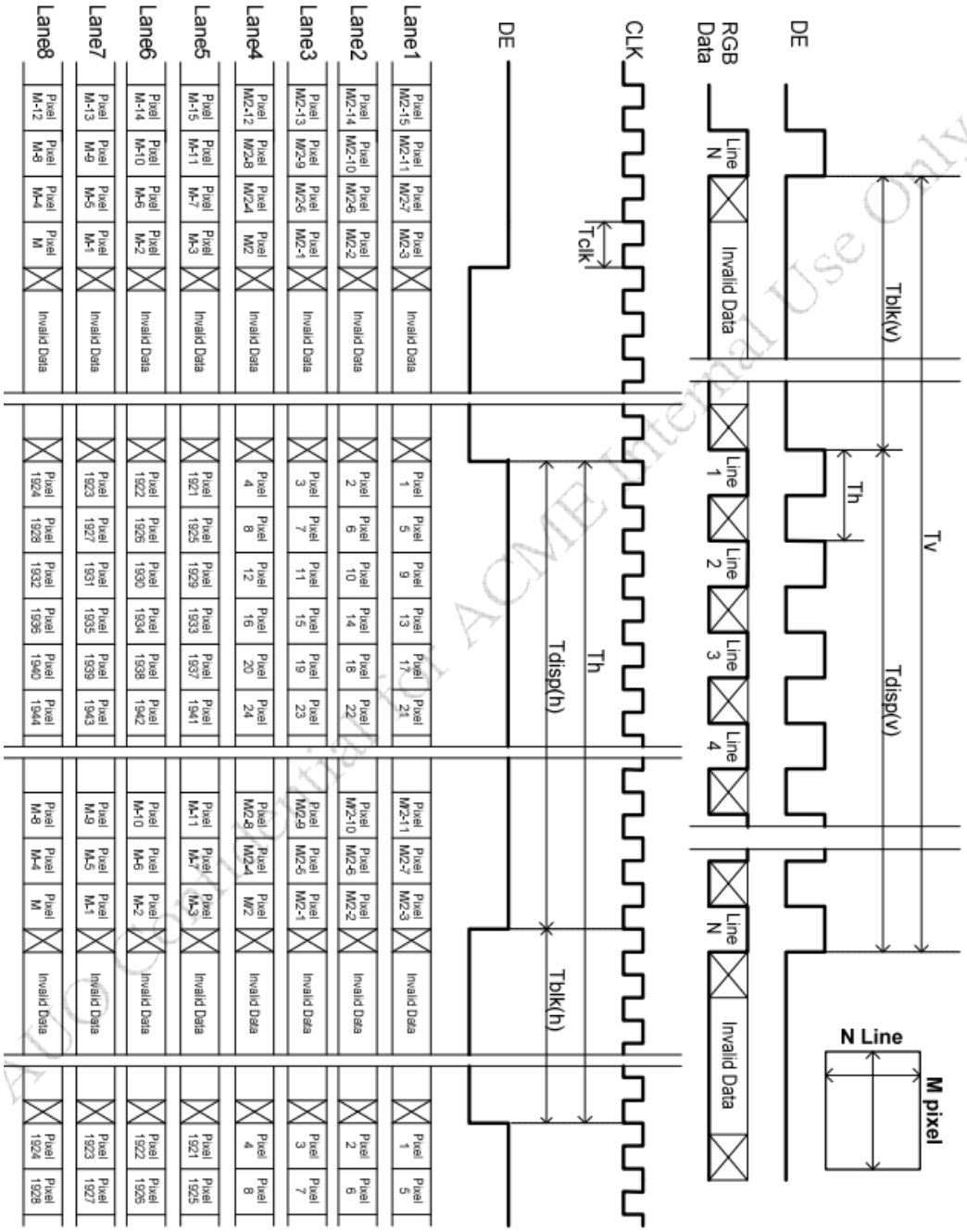

ACME Confidential For ACME Internal Use Only

5.2 Input interface characteristics

V by One spec

Item		Symbol	Min.	Typ.	Max	Unit	Remark
V-by-one Interface	VRXINP/N input each bit Period	TRRIP (UI)	310	-	379	ps	10bit Note 1
	Receiver Clock : Spread Spectrum Modulation range	Fclk_ss	Fclk -0.5%	-	Fclk +0.5%	MHz	Note 2
	Receiver Clock : Spread Spectrum Modulation frequency	Fss	30			KHz	Note 2
	CDR training pattern time	TLOCK	-	500	-	us	Note 1
	Latency from LOCKN 'HIGH' to clock training pattern	L1	0	-	-	us	Note 1
	Latency from LOCKN 'LOW' to normal 8b10b data	L2	-	-	70	us	Note 1
	CML Differential Input High Threshold	VRTH	50	-	-	mV_{DC}	
	CML Differential Input Low Threshold	VRTL	-	-	-50	mV_{DC}	
	CML Common mode Bias Voltage	VRCT	0.8	0.9	1.0	Vdc	
	Intra-pair skew	TINTRA	-	-	0.3	UI	Note 3
	Intra-pair skew	TINTER	-	-	5	UI	Note 4
	Eye diagram at receiver	A_X	-	0.25	-	UI	Note 5
		A_Y	-	0	-	mV	
		B_X	-	0.3	-	UI	
		B_Y	-	50	-	mV	
		C_X	-	0.7	-	UI	
		C_Y	-	50	-	mV	
		D_X	-	0.75	-	UI	
		D_Y	-	0	-	mV	
		E_X	-	0.7	-	UI	
		E_Y	-	-50	-	mV	
		F_X	-	0.3	-	UI	
		F_Y	-	-50	-	mV	

Note 1: V-by-one Signal diagram

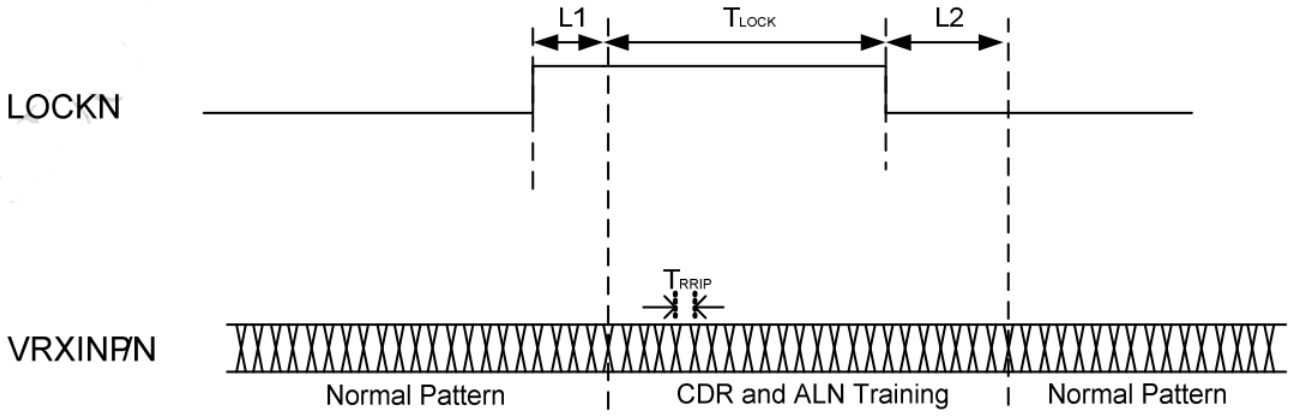

Note 2: Receiver Clock SSCG (Spread spectrum clock generator) is defined as below figures.

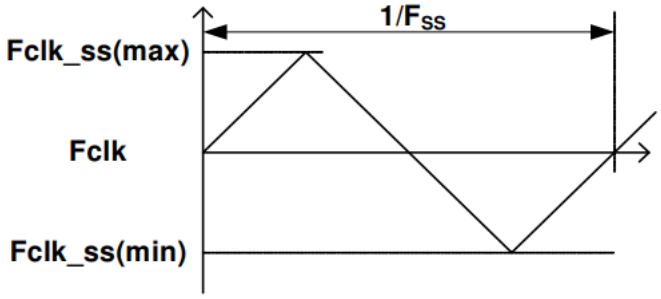

Note 3: V-by-one Intra-pair Skew

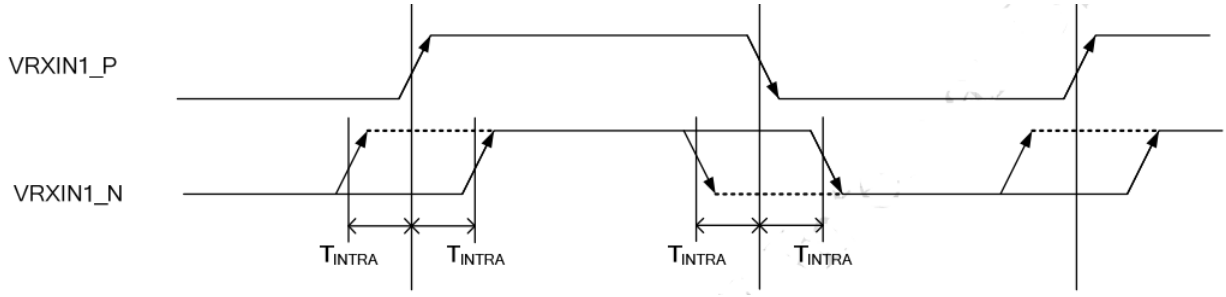

Note 4: V-by-one Inter-pair Skew

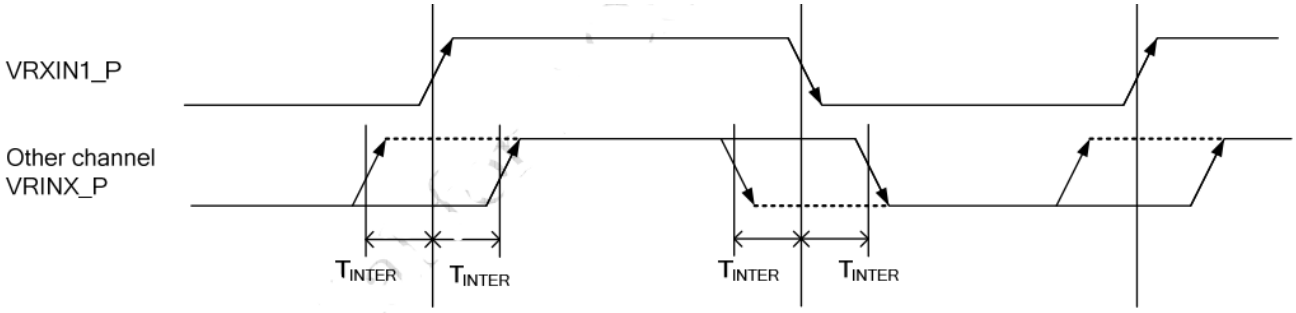

Note 5: Eye diagram at receiver

Eye Mask

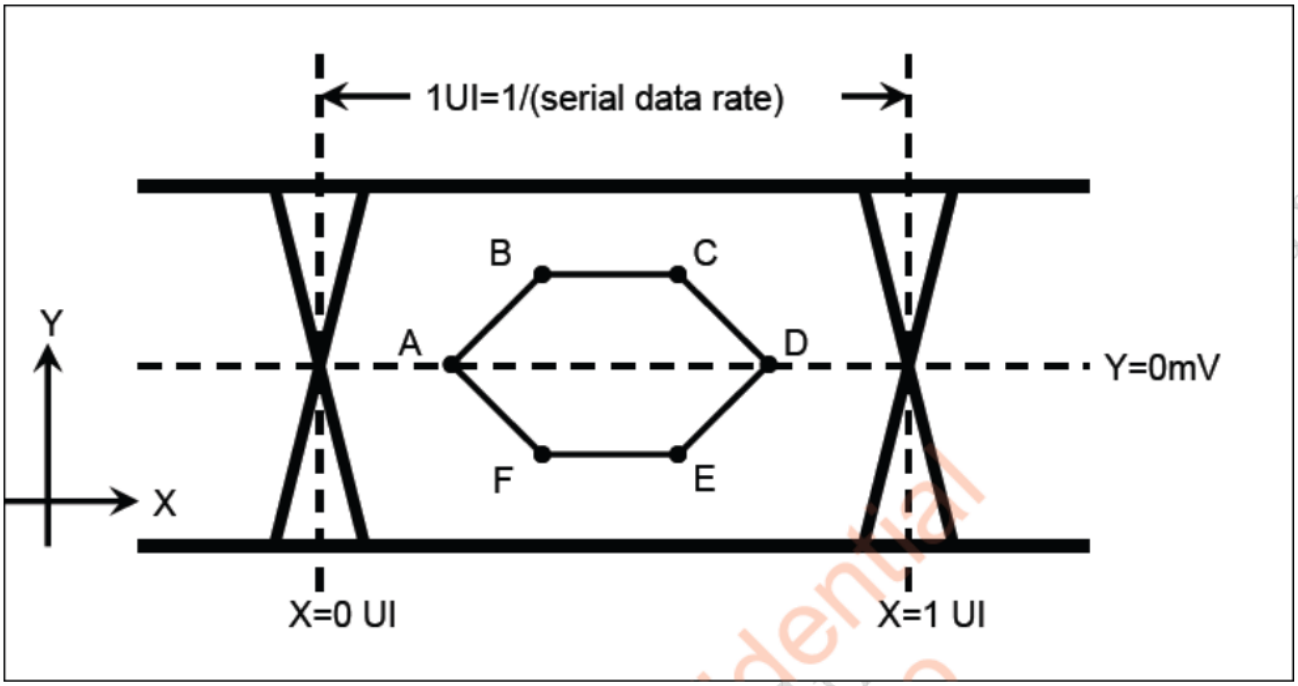

Example of Eye diagram



5.3 Power Sequence for LCD

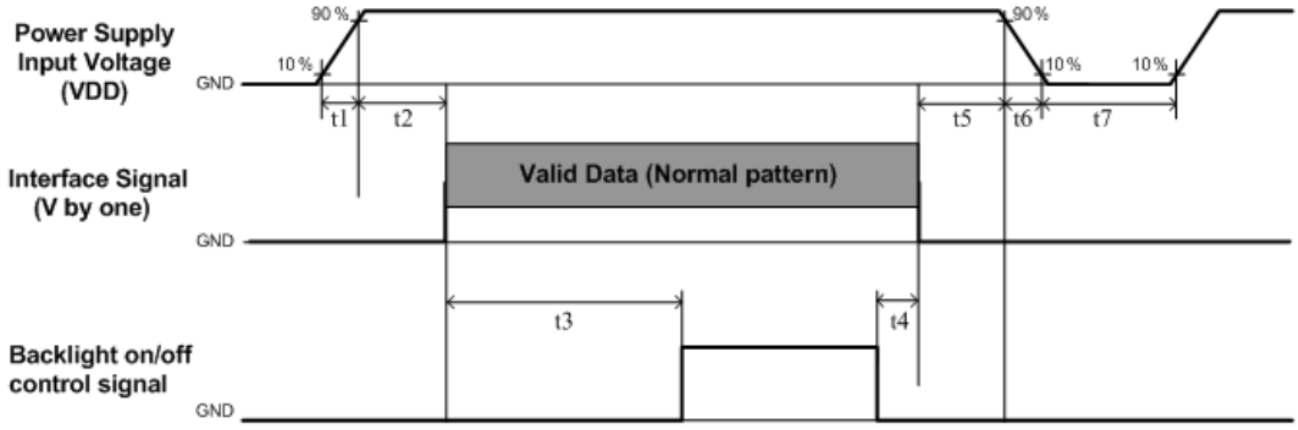

Parameter	Values			Unit
	Min.	Type.	Max.	
t1	0.4	---	30	ms
t2	40	---	---	ms
t3	640	---	---	ms
t4	0 *1	---	---	ms
t5	0	---	---	ms
t6	---	---	--- *2	ms
t7	1000 *3	---	---	ms

Note:

1. t4=0: concern for residual pattern before BLU turn off.
2. t6: voltage of VDD must decay smoothly after power-off. (customer system decide this value)
3. When the power supply input voltage(VDD) is off, be sure to pull down the valid and the invalid data to 0V.

6. Backlight Specification

6.1 Electrical specification

	Item	Symbol		Condition	Min	Typ	Max	Unit	Note
1	Power Supply Input Voltage	VDDB		-	22.8	24	25.2	V	-
2	Power Supply Input Current	IDDB		VDDB=24V		9.89	11.06	A	1
3	Power Consumption	PDDB		VDDB=24V		237.5	265.47	Watt	1
4	Inrush Current	IRUSH		VDDB=24V			14	A	2
5	Control signal votlage	Vsignal	Hi	VDDB=24V	2	-	5.5	V	-
			Low	VDDB=24V	0	-	0.8		3
6	Control signal current	Isignal		VDDB=24V	-	-	1.5	mA	-
7	External PWM Duty ratio (input duty ratio)	D_EPWM		VDDB=24V	20	-	100	%	4
8	External PWM Frequency	F_EPWM		VDDB=24V	14k	-	20k	Hz	4
9	DET status signal	DET	Hi	VDDB=24V	Open Collector			V	5
			Lo	VDDB=24V	0	-	0.8	V	5
10	Input Impedance	Rin		VDDB=24V	300	-	-	Kohm	
11	LED lifetime	LTLED			(50,000)	-	-	Hr	6

Note 1: Dimming ratio= 100%,（Ta=25±5℃, Turn on for 45minutes）

Note 2: MAX input current while DB turn on, measurement condition VDDB rising time=20ms(VDDB: 10%~90%)

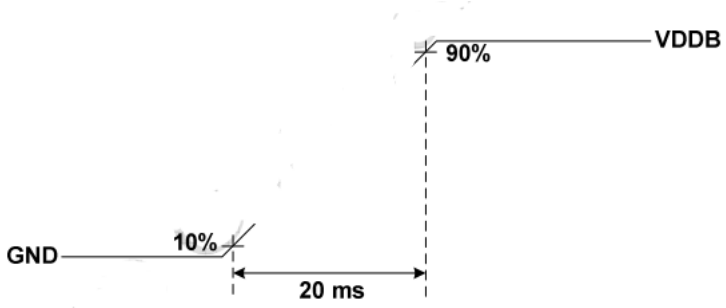

Note 3: When BLU off (VDDB = 24V, VBLON = 0V), IDDB (max) = 0.1A

Note 4: Less than 5% dimming control is functional well and no backlight shutdown happened Note 5: Normal: 0~0.8V; Abnormal: Open collector

Note 6: The lifetime (MTTF) is defined as the time which luminance of LED is 50% compared to its original value. [Operating condition: Continuous operating at Ta = 25±2℃, for single LED only]

6.2 Input Pin Assignment

The G650ZVN01.0 module requires 2 power input (12-pin & 14-pin)
LED DB connector: CI0114M1HRL-NH(CviLux) or equivalent

pin	Symbol	Description	Remark
1	VDDB	Power Supply Input Voltage	
2	VDDB	Power Supply Input Voltage	
3	VDDB	Power Supply Input Voltage	
4	VDDB	Power Supply Input Voltage	
5	VDDB	Power Supply Input Voltage	
6	GND	Ground	
7	GND	Ground	
8	GND	Ground	
9	GND	Ground	
10	GND	Ground	
11	DET	BLU status detection:	Note 1
12	VBLON	BLU On-Off control:	Note 2,3
13	NC	NC	Note 4
14	PDIM	External PWM	Note 2,5

LED DB connector: CI0112M1HRL-NH(CviLux)

pin	Symbol	Description	Remark
1	VDDB	Power Supply Input Voltage	
2	VDDB	Power Supply Input Voltage	
3	VDDB	Power Supply Input Voltage	
4	VDDB	Power Supply Input Voltage	
5	VDDB	Power Supply Input Voltage	
6	GND	Ground	
7	GND	Ground	
8	GND	Ground	
9	GND	Ground	
10	GND	Ground	
11	NC	NC	Note 4
12	NC	NC	Note 4

Note1: DET status

DET	BLU status

0 ~ 0.8V	Normal
Open collector	Abnorma

Recommend pull high R > 10K ohm, pull high voltage VDD = 3.3V

Note2: input control signal threshold voltage definition

Item	Symbo	Min.	Typ.	Max.	Unit
Input High Threshold Voltage	VIH	2	-	5.5	V
Input Low Threshold Voltage	VIL	0	-	0.8	V

Note3: VBLON

Mode selection

VBLON	Note
H or OPEN	BL On
L	BL Off

Note4: Please leave this pin unoccupied. It cannot be connected by any signal (Low/GND/High).

Note5: PDIM



External PWM function dimming ratio 0%~100%, Judge condition as below:

1.Backlight module must be lighted ON normally.

2.All protection function must work normally.

3.Uniformity and flicker could be guaranteed at External PWM function dimming ratio 5%~100%

6.3 Power Sequence for Backlight

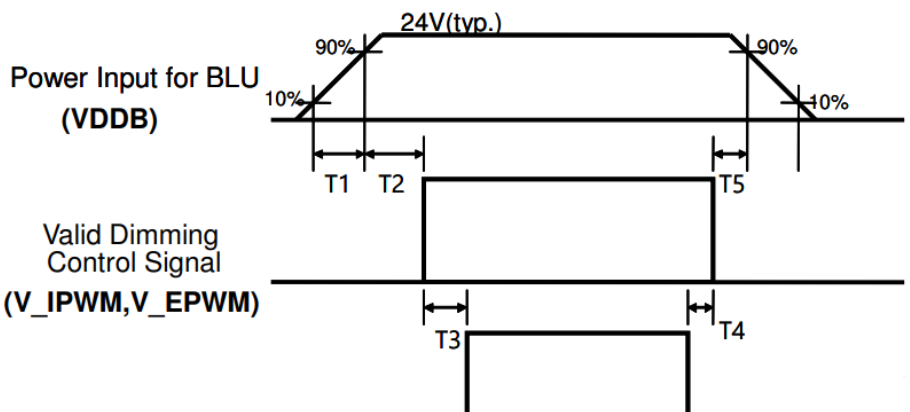

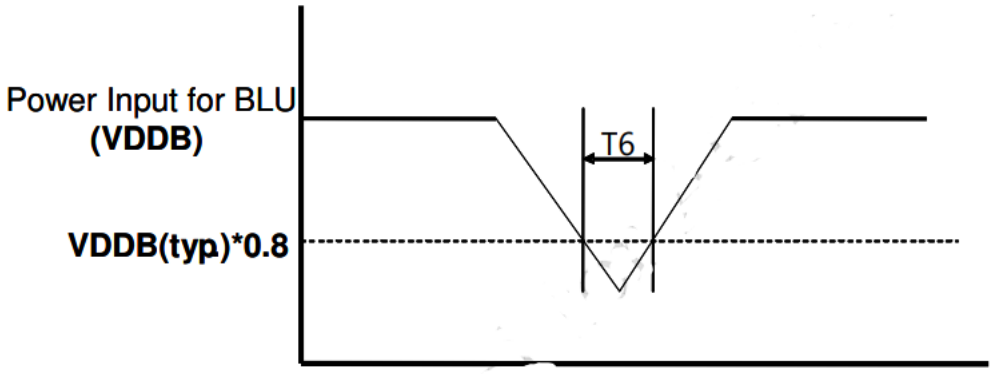

Dip condition

Parameter	Min	Typ	Max	Units
T1	20	-	-	ms *1
T2	250	-	-	ms
T3	200			ms
T4	0	-	-	ms
T5	0	-	-	ms
T6	-	-	1000	ms*2

Note:1. T6 describes VDDB dip condition and VDDB couldn’t lower than 10% VDDB.

7. Mechanical Characteristics

The contents provide general mechanical characteristics for the model G650ZVN01.0. In addition the figures in the next page are detailed mechanical drawing of the LCD.

Item		Dimension	Unit	Remark
Outline Dimension	Horizontal	1450.38	mm	
	Vertical	825.42	mm	
	Depth (Dmin)	31.1	mm	Front bezel to Back Bezel
	Depth (Dmax)	47.8	mm	Front Bezel to DB Cover
	Bezel opening	1216(H)x686.8(V)	mm	
	Bezel Width	9.8/9.8/9.8/9.8	mm	U/D/L/R
	Display Area	1428.48 (H)x803.52 (V)	mm	
Weight	18		Kg	

Front View

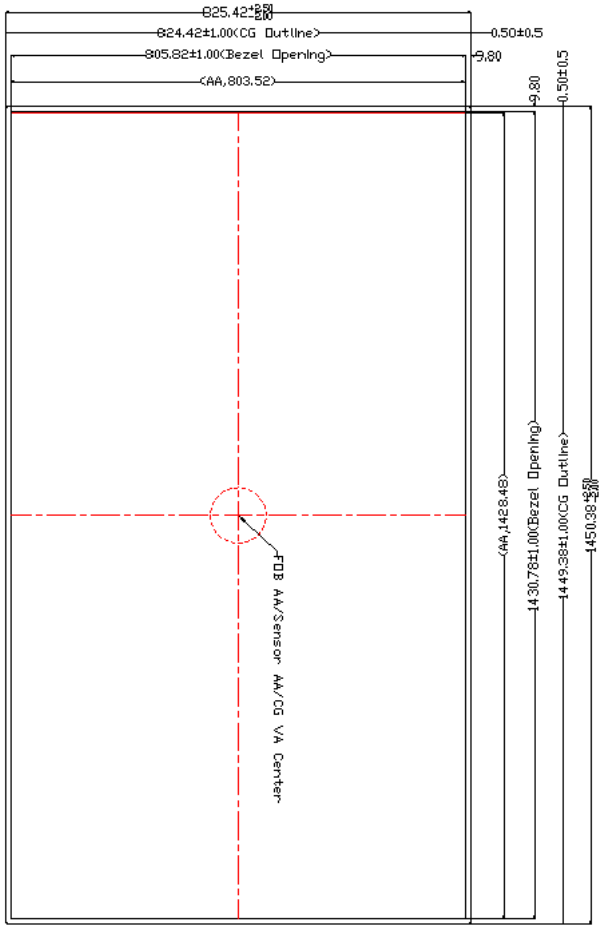

Side View

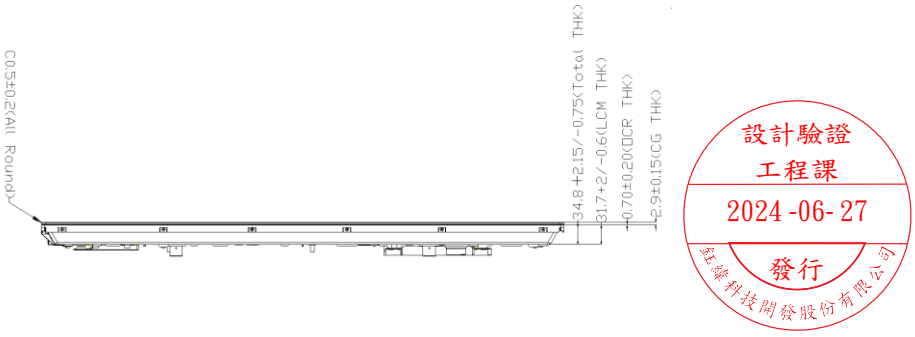

設計驗證
工程課
2024-06-27
發行

Back View

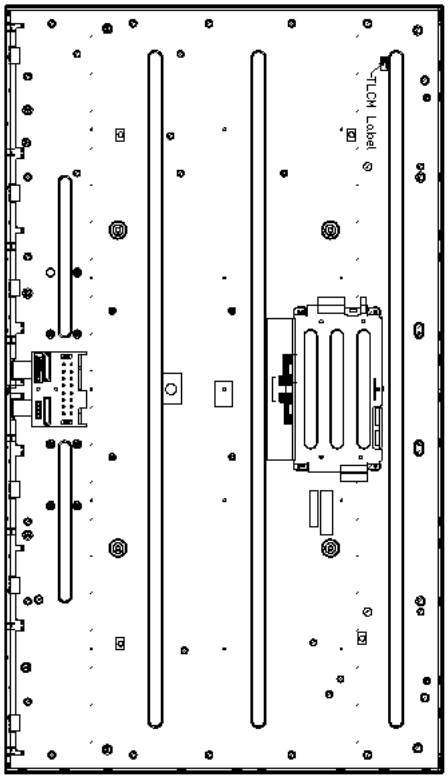

設計驗證
工程課
2024 -06- 27
發行
虹巖科技開發股份有限公司

8. Quality Requirement

The defect categories covered in this specification include defects in the active area such as dot defects, blemishes, and partly / completely malfunctioning displays as well as visual appearance of the complete product and packaging of the product.

8.1 Inspection Conditions

Item	Condition	
Ambient lighting	Cosmetic：600~800Lux Function：300 to 700 Lux	
Temperature /Humidity	Temperature: 20 ~ 25℃ Humidity: 65±5%	
Driving condition	Equipment	Product specific test tool
Inspection method	Supply voltage	Typical voltages as given in the specification
	Distance	100±5 cm from display
	Viewing angle	Standard viewing angle of inspection shall be perpendicular to thedisplay. Inspection at other viewing angles shall not exceed 45 ofperpendicular viewing angle

8.2 Visual Inspection Criteria

Defect category and legend	Inspection standard	Defect grade		
		Critical	Major	Minor
Foreign fiber / Scratch / other linear defects	W≦ 0.2 Disregarded 0.2<W≦ 0.25, L≦ 10, N≤10 ; 0.2<W≦ 0.25, 10 ≦ L≦ 30, N≤3 per 10cm diameter circle W>0.25, L>30, N=0		●	
Non-feeling scratch & Line defects	W≦ 0.25 Disregarded 0.25<W≦ 0.5, L≦ 50 (accumulated), N≤6. Minimum distance between two defects = 100 mm. W>0.5, N=0		●	
Black / White spots / Particles / Bubble / Dent / other dot defects	D≤0.6 Disregarded 0.6<D≦1.2, N≦12 D＞1.2, N=0		●	

Pixel highlight	D≤0.6 Disregarded 0.6<D≦1.2, N≦12 D＞1.2, N=0		●	
Pixel dark spot	>1/2 spot area, visible under 2%ND filter When the LCD module is displayed in black mode, the screen appears bright.R.G or B 1 point: N≤2 Less than or equal to half the sub-pixel size: N≤12		●	
All points are defective	>1/2 spot area, visible under 2%ND filter When the LCD module is displayed in bright mode, the screen displays a dark color.R.G or B 1 point: N≤12 2 adjacent points (horizontal and vertical) : ≤2 pairs Total black spots: N≤14		●	
Total amount of full dot defects	0.6<D≦0.8, N≦ 8 0.8<D≦1.0, N≦ 4 1.0<D≦1.2, N≦ 4		●	
Abnormal display / Bright line / Dark line / No display	Not allowed			●
FPC open	Not allowed	●		
FPC oxidized, dirty, deformed	Not allowed		●	
FPC deformed	Does not affect function accept		●	
Mura / Light leakage	Invisible is OK while 2% ND filter apply at L128. Movable mura is OK after lightly patting on the mura area.		●	
Glass chipping 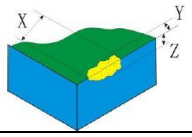	X≤1mm，Y≤1mm， Z≤T/3忽略; X＞1mm，Y＞1mm，Z＞1/3T ， N=0; Does not affect function Accept		●	
Glass crack 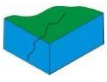	Not allowed		●	
LCM studs	Studs must not be loose, missing, untapped, or crooked, broken, more material, less material, cracked, warped, etc; Does not affect assembly accept		●	
Visually, the cracks were all NG				

Note 1: D=Diameter, L=Length, W=Width, N=Number， DS=Distance

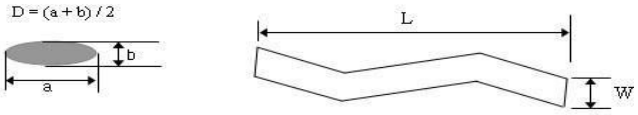

Note 2: dot smaller than 1/2 of sub-pixel size will not counted as “1 dot” defect.

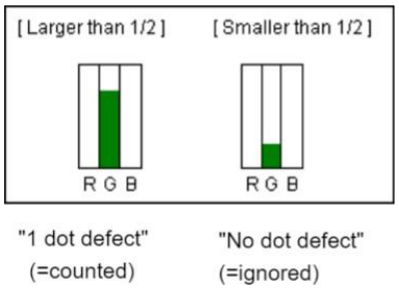

Note 3:adjacent dots defect

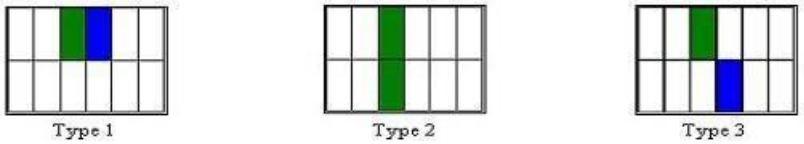

Note 4:LCM studs control drawing(red mark)

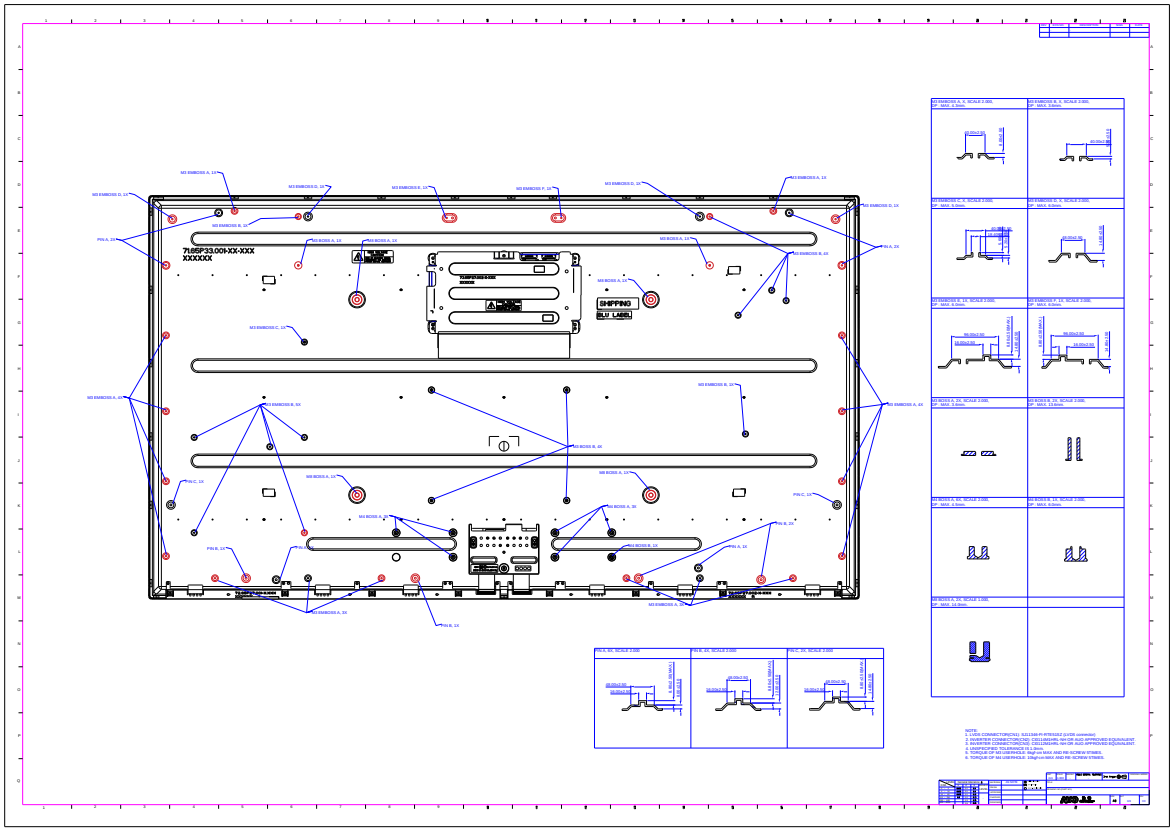

9. Reliability Test Items

	Test Item	Q'ty	Condition
1	High temperature storage test	3	60℃, 500hrs
2	Low temperature storage test	3	-20℃, 500hrs
3	High temperature operation test	3	50℃, 500hrs
4	Low temperature operation test	3	-10℃, 500hrs
5	Vibration test (With carton)	1(PKG)	Random wave (1.04Grms 2~200Hz) Duration : X,Y,Z 20min per axes
6	Drop test (With carton)	1(PKG)	Height: 25.4 cm Direction: Only bottom flat twice (ASTMD4169-I)

10. International Standard

10.1 Safety

1. UL 60950-1; Standard for Safety of Information Technology Equipment Including electrical Business Equipment.
2. IEC 60950-1; Standard for Safety of International Electrotechnical Commission
3. EN 60950-1; European Committee for Electrotechnical Standardization (CENELEC), EUROPEAN STANDARD for Safety of Information Technology Equipment Including Electrical Business Equipment.

10.2 EMC

1. ANSI C63.4 "Methods of Measurement of Radio-Noise Emissions from Low-Voltage Electrical and Electrical Equipment in the Range of 9kHz to 40GHz. "American National standards Institute(ANSI), 1992
2. C.I.S.P.R "Limits and Methods of Measurement of Radio Interface Characteristics of Information Technology Equipment." International Special committee on Radio Interference.
3. EN 55022 "Limits and Methods of Measurement of Radio Interface Characteristics of Information Technology Equipment." European Committee for Electrotechnical Standardization. (CENELEC), 1998

11. Packing

11.1 Module Label

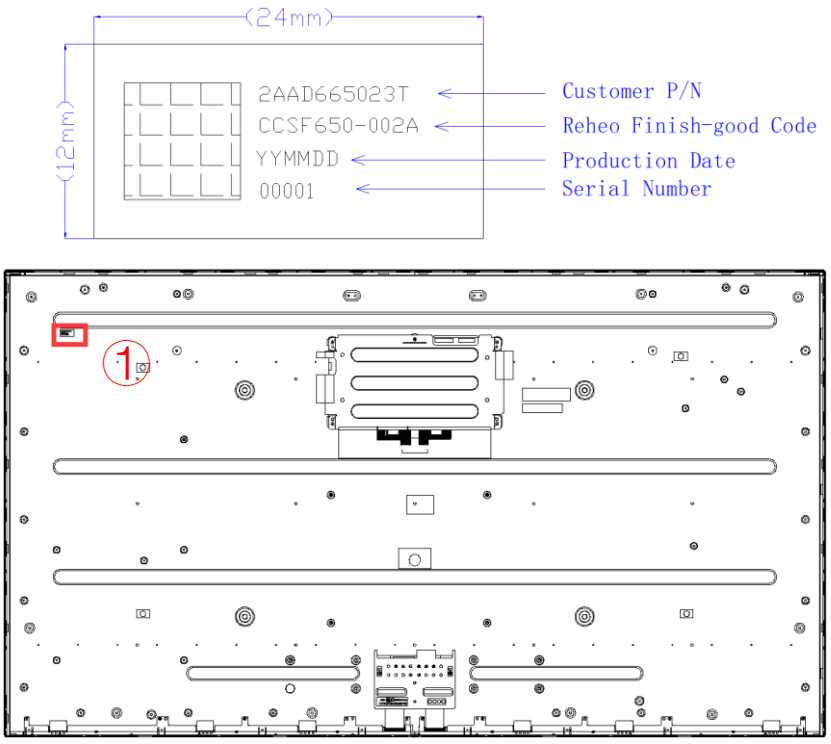

Customer P/N: 2AAD665023T

EHEO Finish-good Code: CCSF650-002A

Serial Number: 5 digits, start from 00001, update everyday

Production Date: 6 digits, e.g.,240108

QR code Format：

2AAD665023T_ CCSF650-002A_00001_YYMMDD

11.2 Box Label

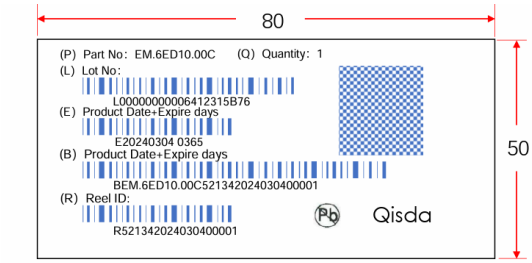

二维码中的内容应包括L码、E码、B码及R码，每项内容用";"分开，且内容只放于一行之中：

L000000000006412315B76;

E20240304 0365;

BEM.6ED10.00C;

R003720240304000001;

10、客户的代码有2个：

①.台湾钰纬：52134

②.苏州钰纬：82588

出货时需根据客户来选择客户代码。

1、一维码使用精度为7μ的code128码，二维码使用精度为23μ的DataMtrix码；

2、P码：客户P/N号；

3、Q码：数量；

4、L码：Lot No：L000000000006412315B76,共21位，其中首位L为标识码，其余为Lot，若lot不足20位则前面加0来满足20位的长度；

5、E码：E20240304 0365,共14位，其中首位E为标识码，中间8位为年月日，后面1位空格，最后4位为质保期，若质保期不足4位则前面加0满足4位的长度；

6、B码：BEM.6ED10.00C521342024030400001,共31位，其中首位B为标识码，后面12位为客户P/N号，再后面5位为厂商代码，再8位为日期，再5位为数量00001，若不足5位则在前面加0满足5位的长度；

7、R码：R521342024030400001,共19位，其中首位R为标识码，52134为厂商代码，后面8位为日期，最后5位为产品流水号，若产品流水号不足5位，则在前面加0满足5位的长度，无论料号是否一样，R码均不允许重复；

8、有无铅标识；

9、右下角为Qisda的logo，字体为Century Gothic；

Box Label

11.3 Packing Methods

1、套PE袋
在每个产品外侧套1个PE袋并用胶带封口，1pcs/产品。

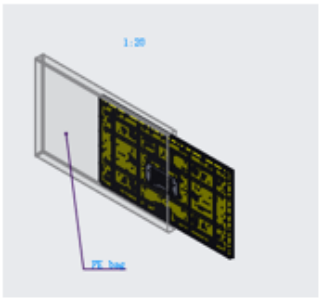

2、将套好PE袋的产品插入EPE BOX，并盖两片左右上盖。4pcs产品/EPE BOX。

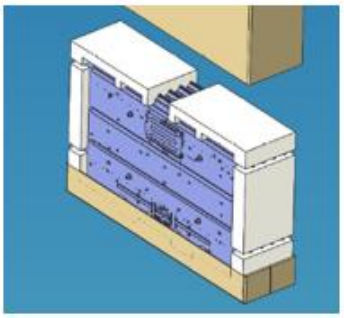

3、装纸箱：

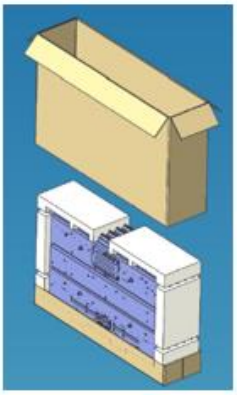

4、封纸箱：胶带H型封箱。

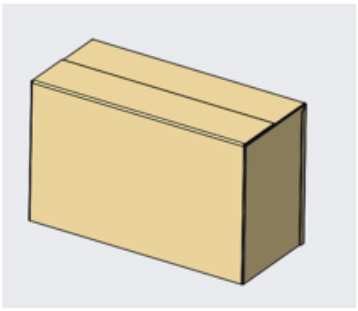

5、打包托盘：每箱需要8根护角加固，1箱/托。用打包带固定成井字形。

打包后外尺寸：长1650*宽700*高1125mm

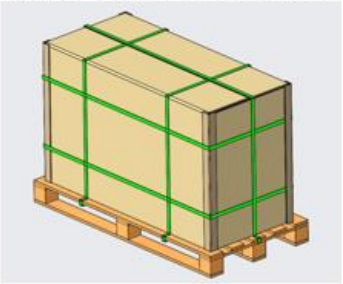

12. Handling & Cautions

12.1 Mounting Method

Excessive stress or pressure on the glass of this product should be avoided. Care must be taken to ensure that no torsional or compressive forces are applied to the product when it is mounted.

If the customer's set presses the main parts of the product, it may show the phenomenon of abnormal display. But this phenomenon does not mean malfunction.

To determine the optimum mounting angle, refer to the viewing angle range in the specification for each model.

Mount a product with the specified mounting parts.

12.2 Caution of Handling and Cleaning

Since the product is mainly made of glass, do not apply strong mechanical impact or static load onto it. Handling with care since shock, vibration, and careless handling may seriously affect the product.

If it falls from a high place or receives a strong shock, the glass maybe broken.

If the use of a chemical is unavoidable, use soft cloth with solvent recommended below to clean the product's surface.

IPA (Isopropyl Alcohol), Ethyl Alcohol, Tri-chloro, tri-florothane.

Please handle FPC with care.

12.3 Caution against Static Charge

Do not input any signals before power is turn on, and ground your body, work/assembly area, assembly equipment to protect against static electricity.

Remove the protective film slowly, keeping the removing direction approximate 30-degree not vertical from the surface, if possible, under ESD control device like ion blower, and the humidity of working room should be kept over 50%RH to reduce the risk of static charge.

Avoid the use work clothing made of synthetic fibers. We recommend cotton clothing or other conductivity-treated fibers.

In handling the product, wear non-charged material gloves. And the conducting wrist to the earth and the conducting shoes to the earth are necessary.

12.4 Caution for Operation

It is indispensable to drive this product within the specified voltage limit. An electro-chemical reaction due to DC drive may cause undesirable deterioration
of this product. so, the use of DC drive should avoid.

Do not connect or disconnect this product to or from the system when power is on.

Never use this product under abnormal conditions of high temperature and high humidity.

When it is exposed to drastic fluctuation of temperature (hot to cold or cold to hot), the product may be affected.

Response time will increase at temperature extremely lower than the operating temperature.

range and on the other hand this product may turn black at temperature above its operational

range. However, those phenomena do not mean malfunction. This product will revert to normal operation once the temperature returns to the recommended temperature range for normal operation.
Do not display a fixed pattern for a long time because it may cause image sticking.
If it is un-avoided, please use a screen saver.
Do not disassemble and/or re-assemble the product.

12.5 Packing

Avoid intense shock and falls from a height.
To prevent the product from degradation, do not operate or store them exposed directly to sunshine or high temperature/humidity for long periods.

12.6 Storage

A slight dew depositing on terminals is a cause for electro-chemical reaction resulting in terminal open circuit.
Relative humidity of the environment should therefore be kept below 60%RH.
Do not store the product near organic solvents or corrosive gasses.
Keep the product safe from vibration, shock, and pressure.
Black or white air-bubbles may be produced if the product is stored for long time in the lower temperature or mechanical shocks are applied onto the product.
In the case of storing for a long period of time for the purpose or replacement use,the following ways are recommended.
Store in a polyethylene bag with sealed so as not to enter fresh air outside in it.
Store in a dark place where neither exposure to direct sunlight nor light is.
Keep temperature in the specified storage temperature range.
If possible, store the product in the packaging situation when it was delivered.

12.7 Safety

For the crash damaged or unnecessary this product, it is recommended to wash off liquid crystal by either of solvents such as acetone and ethanol and should be burned up later.
In the case of this product is broken, watch out whether liquid crystal leaks out or not. If your hands touch the liquid crystal, wash your hands cleanly with water and soap as soon as possible.
If you swallow the liquid crystal by mistake, wash your mouth thoroughly with water and then drink a large amount of water; induce vomiting, and consult a physician.
If the liquid crystal touches your eyes, flush your eyes with running water for at least fifteen minutes.
If the liquid crystal touches your skin or clothes, remove it and wash the affected part of your skin or clothes with soap and running water.

- END -