# 1MHz, 3A Synchronous Step-Down Regulator

## Features

- **High Efficiency: Up to 95%**
- **50μA Operating Quiescent Current**
- **<1μA Shutdown Current**
- **Internal Soft Start Function**
  **Output Current :**
  **G2822T11U: 2A Continuous, 3A Peak**
  **G2822TB1U: 2A Continuous, 3A Peak**
  **G2822RC1U: 3A Continuous**
- **2.7V to 6.5V Input Voltage Range**
- **1MHz Switching Frequency**
- **No Schottky Diode Required**
- **100% Duty Cycle in Dropout Operation**
- **0.6V Reference Allows Low Output Voltages**
- **Over Temperature Protection**
- **Hiccup Short-Circuit Protection**
- **Output Discharge**
- **RoHS Compliant**

## General Description

The G2822 is a high efficiency monolithic synchronous buck regulator using a constant frequency, current mode architecture. Supply current during operation is only 50μA and drops to <1μA in shutdown. The 2.7V to 6.5V input voltage range makes the G2822 ideally suited for single Li-Ion battery-powered applications. 100% duty cycle provides low dropout operation, extending battery run time in portable systems. Switching frequency is internally set at 1MHz, allowing the use of small surface mount inductors and capacitors. The internal synchronous switch increase efficiency and eliminates the need for an external Schottky diode. Built-in soft start function eliminates in-rush current that could damage the system.

## Applications

- **Cellular Telephones**
- **Personal Information Appliances**
- **Microprocessors and DSP Core Supplies**
- **Wireless and DSL Modems**
- **Digital Still and Video Cameras**
- **MP3 Players**
- **Portable Instruments**

## Ordering Information

| ORDER NUMBER | MARKING | OUTPUT VOLTAGE | TEMP. RANGE | PACKAGE (Green) |
|---|---|---|---|---|
| G2822T11U | 2822x | Adjustable | -40°C to +85°C | SOT-23-5 |
| G2822TB1U | 2822x | Adjustable | -40°C to +85°C | SOT-23-6 |
| G2822RC1U | 2822 | Adjustable | -40°C to +85°C | TDFN2X2-8 |

Note: T1: SOT-23-5 TB: SOT-23-6 RC: TDFN2X2-8
1: Bonding Code
U: Tape & Reel
Green : Lead Free / Halogen Free

## Pin Configuration

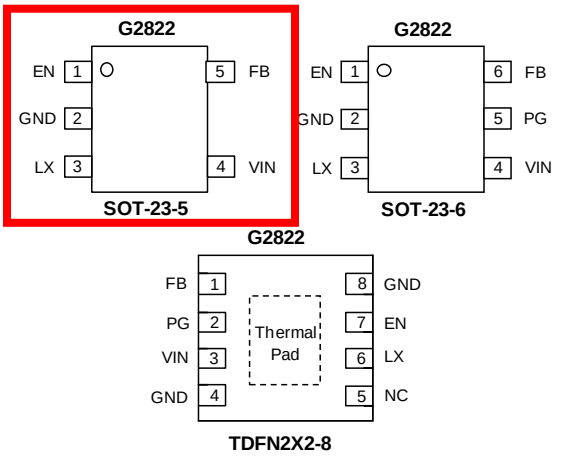


## Typical Application Circuit

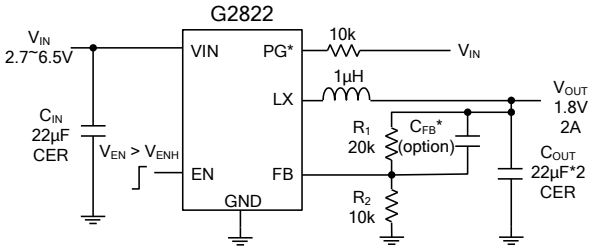

## Absolute Maximum Ratings

VIN to GND . . . . . -0.3V to +7V
EN, VFB to GND. . . . . -0.3V to (VIN + 0.3V)
LX to GND . . . . . -0.3V to (VIN + 0.3V)
LX to GND . . . . . -3V to (VIN + 3V) for <20ns
Thermal Resistance Junction to Ambient, ($\theta_{JA}$)
SOT-23-5. . . . . 250°C/W(1)
SOT-23-6. . . . . 240°C/W(1)
TDFN2X2-8 . . . . . 127°C/W(2)
Continuous Power Dissipation ($T_A$ = +25°C)
SOT-23-5. . . . . .0.52W(1)
SOT-23-6. . . . . .0.52W(1)
TDFN2X2-8 . . . . . .1.0W(2)

Thermal Resistance Junction to Case, ($\theta_{JC}$)
SOT-23-5. . . . . .60°C/W
SOT-23-6. . . . . .60°C/W
TDFN2X2-8 . . . . . .63°C/W
Operating Temperature Range . . . . . -40°C to 85°C
Maximum Junction Temperature . . . . . 150°C
Storage Temperature Range . . . . . -65°C to 165°C
Reflow Temperature (soldeing,10 sec) . . . . . .260°C

Note:
(1) : Please refer to Minimum Footprint PCB Layout Section.
(2): Please refer to 1in$^2$ of 1oz PCB Layout Section.

## Electrical Characteristics

**($V_{IN}$=5V, $V_{OUT}$ =1.8V, L=1μH, $C_{OUT}$ =22μFx2, $T_A$ =25°C)**

The device is not guaranteed to function outside its operating conditions. Parameters with MIN and/or MAX limits are 100% tested at +25°C, unless otherwise specified.

| PARAMETER | SYMBOL | CONDITION | MIN | TYP | MAX | UNIT |
|---|---|---|---|---|---|---|
| Input Voltage Range | $V_{IN}$ | | 2.7 | --- | 6.5 | V |
| Quiescent Current | $I_Q$ | $I_{OUT}$=0, $V_{FB}$=$V_{REF}$×105% | --- | 50 | --- | μA |
| Shutdown Current | $I_{SHDN}$ | EN=0 | --- | 0.1 | 1 | μA |
| Feedback Reference Voltage | $V_{REF}$ | | 0.594 | 0.6 | 0.606 | V |
| PFET RON | $R_{DS(ON),P}$ | | --- | 80 | --- | mΩ |
| NFET RON | $R_{DS(ON),N}$ | | --- | 60 | --- | mΩ |
| PFET Current Limit | $I_{LIM}$ | | 4.0 | 5.0 | 6.0 | A |
| EN rising threshold | $V_{ENH}$ | | 1.5 | --- | --- | V |
| EN falling threshold | $V_{ENL}$ | | --- | --- | 0.4 | V |
| Input UVLO threshold | $V_{UVLO}$ | | --- | --- | 2.65 | V |
| UVLO hysteresis | $V_{HYS}$ | | --- | 0.2 | --- | V |
| Oscillator Frequency | $F_{OSC}$ | $I_{OUT}$=500mA | --- | 1 | --- | MHz |
| Short Circuit Protection Threshold | $V_{SCP}$ | | --- | 0.1 | --- | V |
| Min ON Time | | | --- | 75 | --- | ns |
| Max Duty Cycle | | | 100 | --- | --- | % |
| Soft Start Time | $T_{SS}$ | | --- | 1 | --- | ms |
| Output Discharge Switch On Resistance | $R_{DISCH}$ | | --- | 50 | --- | Ω |
| Thermal Shutdown Temperature | $T_{SD}$ | | --- | 150 | --- | °C |
| Line regulation | | $I_{OUT}$ = 1A, $V_{IN}$ = 2.7V to 6.5V | --- | 0.05 | --- | %/V |
| Load regulation | | $I_{OUT}$ = 0.5A to 3A | --- | 0.2 | --- | %/A |

## Minimum Footprint PCB Layout Section

**SOT-23-5**

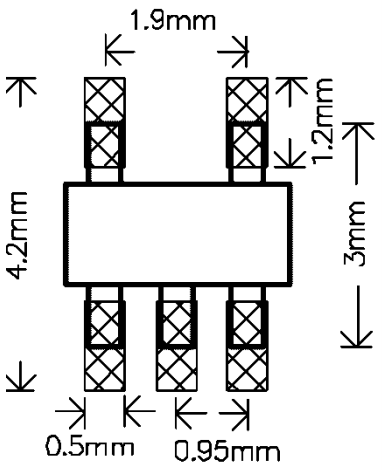


**SOT-23-6**

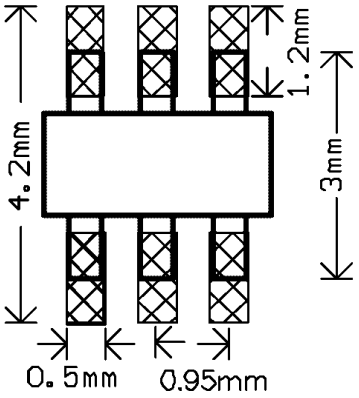


**TDFN2X2-8**

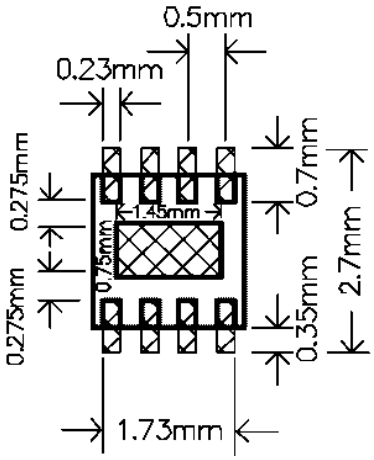


## 1in$^2$ of 1oz PCB Layout Section

**TDFN2X2-8**

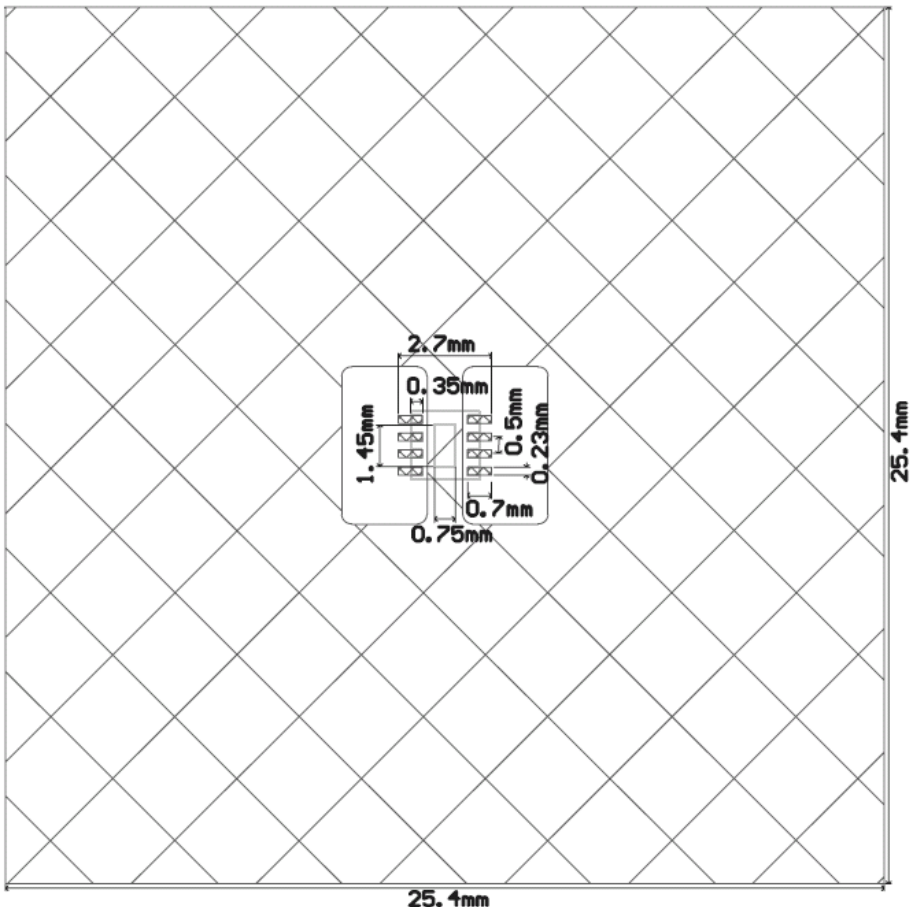

## Typical Performance Characteristics

**($V_{OUT}$ =1.8V, L=1μH, $C_{OUT}$ =22μFx2, $T_A$ =25°C)**

**Efficiency vs. Output Currrent ($V_{OUT}$=1.8V)**

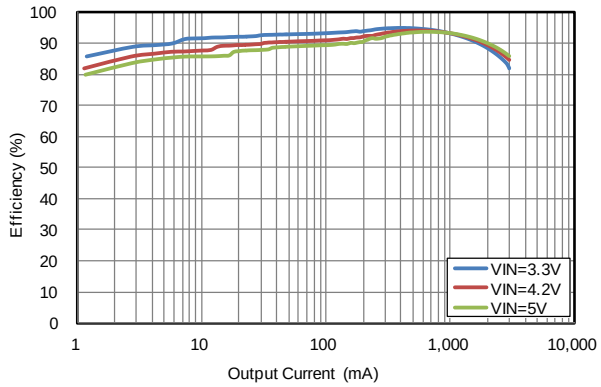


**Output Voltage vs. Output Current**

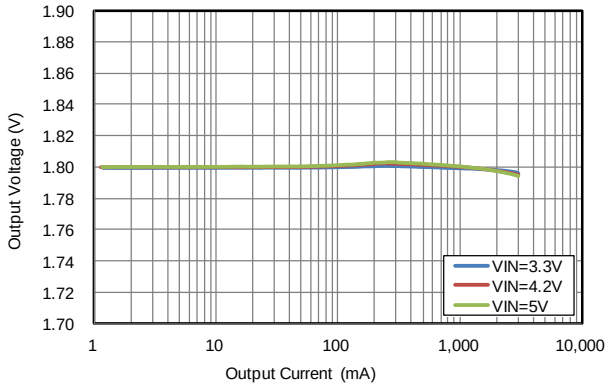


**Output Voltage vs. lutput Voltage**

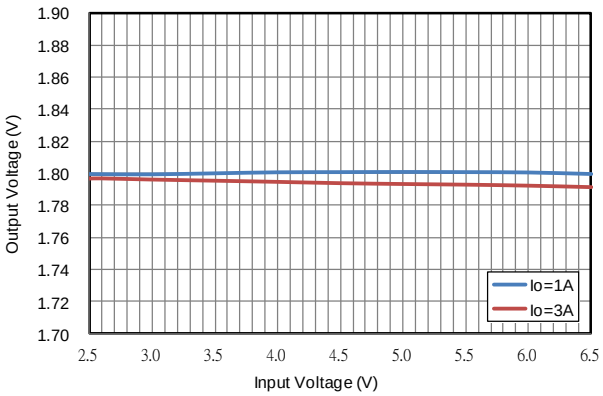


**Enable input Voltage vs. Input Voltage**

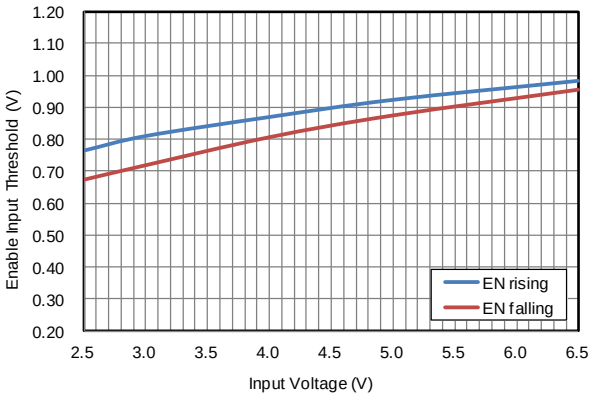


**Shutdown Current vs. Temperature**

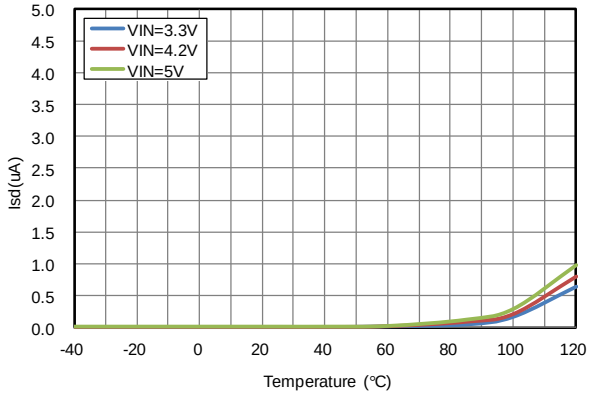


**Quiescent Current vs. Temperature**

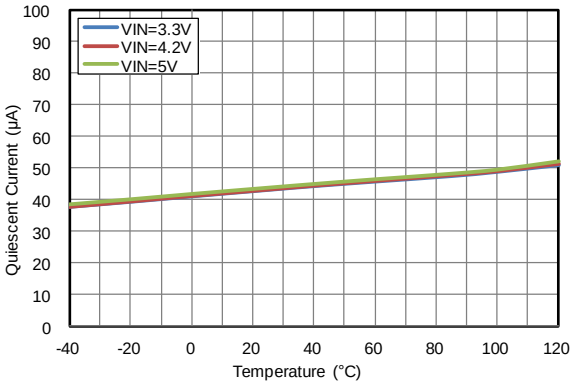

## Typical Performance Characteristics (continued)

**Feedback Voltage vs. Temperature**

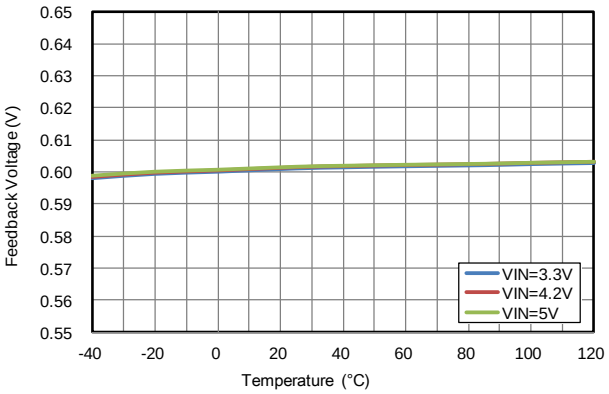


**Switching frequency vs. Temperature**

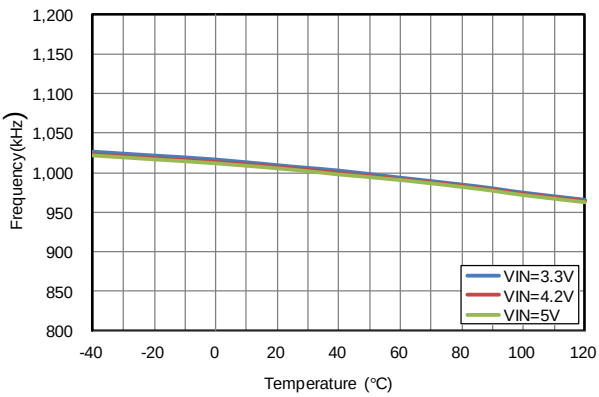


**Power On from EN ($I_O$=0A)**

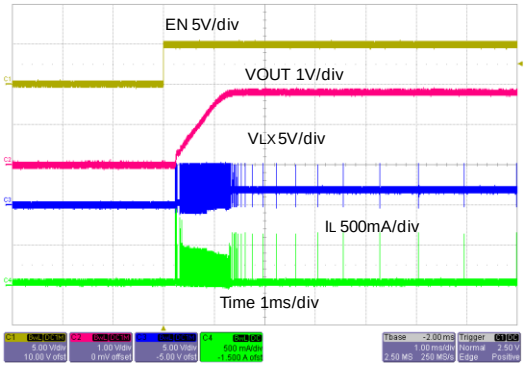


**Power Off from EN ($I_O$=0A)**

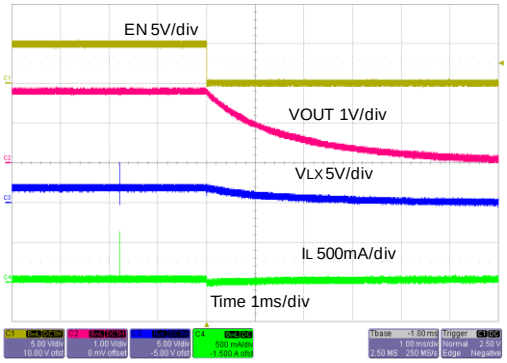


**Power On from EN ($I_O$=2A)**

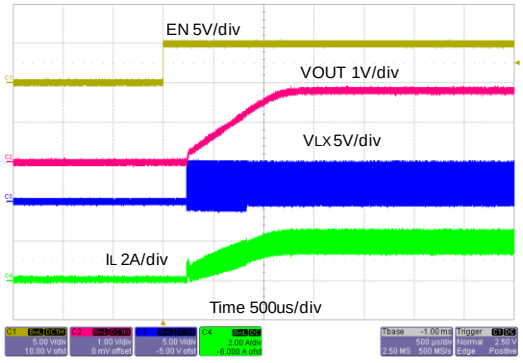


**Power Off from EN ($I_O$=2A)**

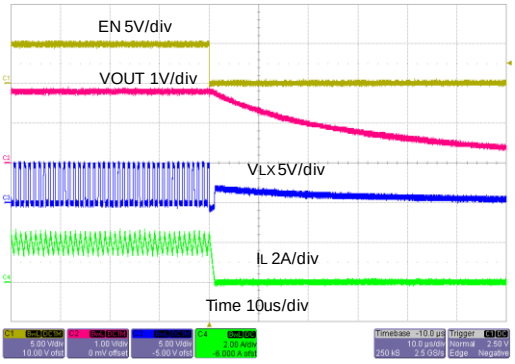

## Typical Performance Characteristics (continued)

**Load Transient Response (0.2A to 2A)**

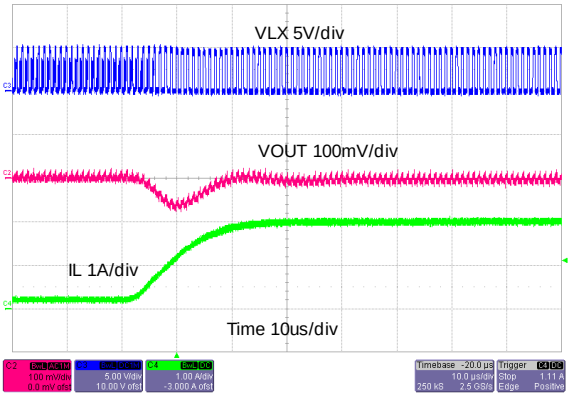


**Load Transient Response (2A to 0.2A)**

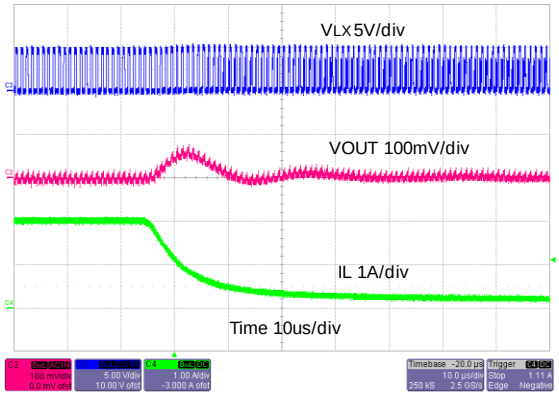


**Steady State Operation ($I_O$=0A)**

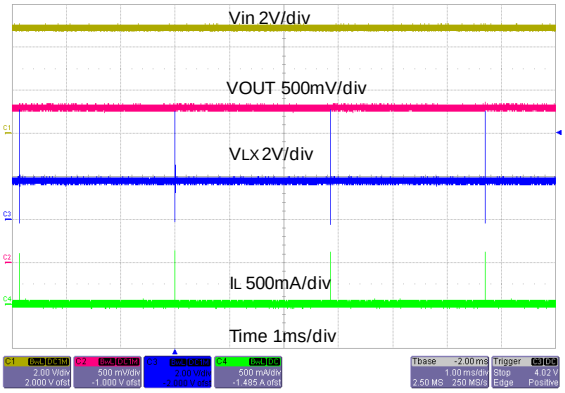


**Steady State Operation ($I_O$=2A)**

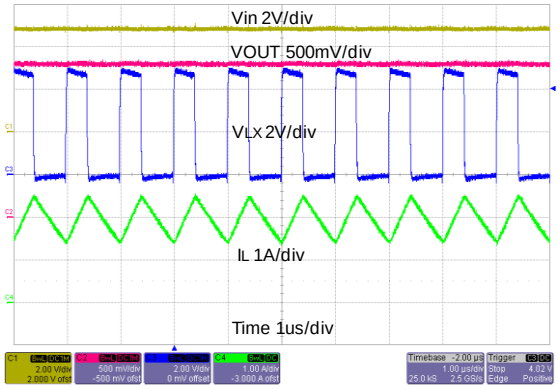


**Short Circuit Waveform (Output short)**

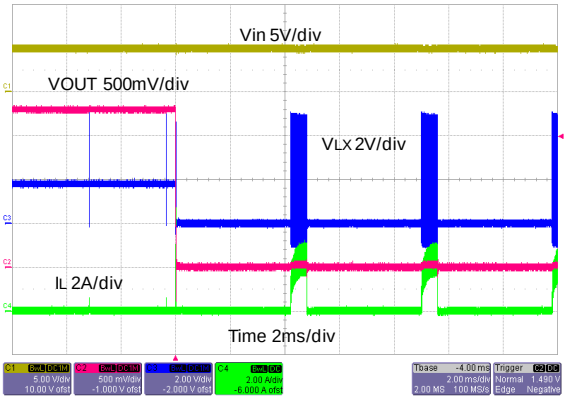


**Short Circuit Waveform (Recovery)**

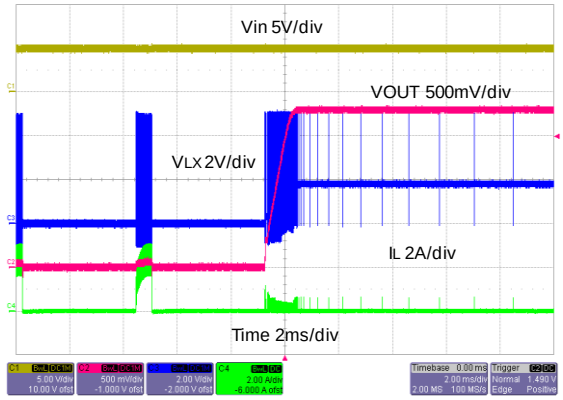

## Pin Descriptions

| PIN | | | NAME | FUNCTION |
|---|---|---|---|---|
| SOT-23-5 | SOT-23-6 | TDFN2X2-8 | | |
| 1 | 1 | 7 | EN | Enable Control Pin (Active high, do not leave EN pin floating) |
| 2 | 2 | 4,8 | GND | Ground Pin |
| 3 | 3 | 6 | LX | Switch Pin |
| 4 | 4 | 3 | VIN | Input Supply Pin |
| 5 | 6 | 1 | FB | Feedback Pin |
| - | 5 | 2 | PG | Power Good. When $V_{OUT}$ is within 10% of regulation point, the output is open drain |
| - | | 5 | NC | No Connection |

## Block Diagram

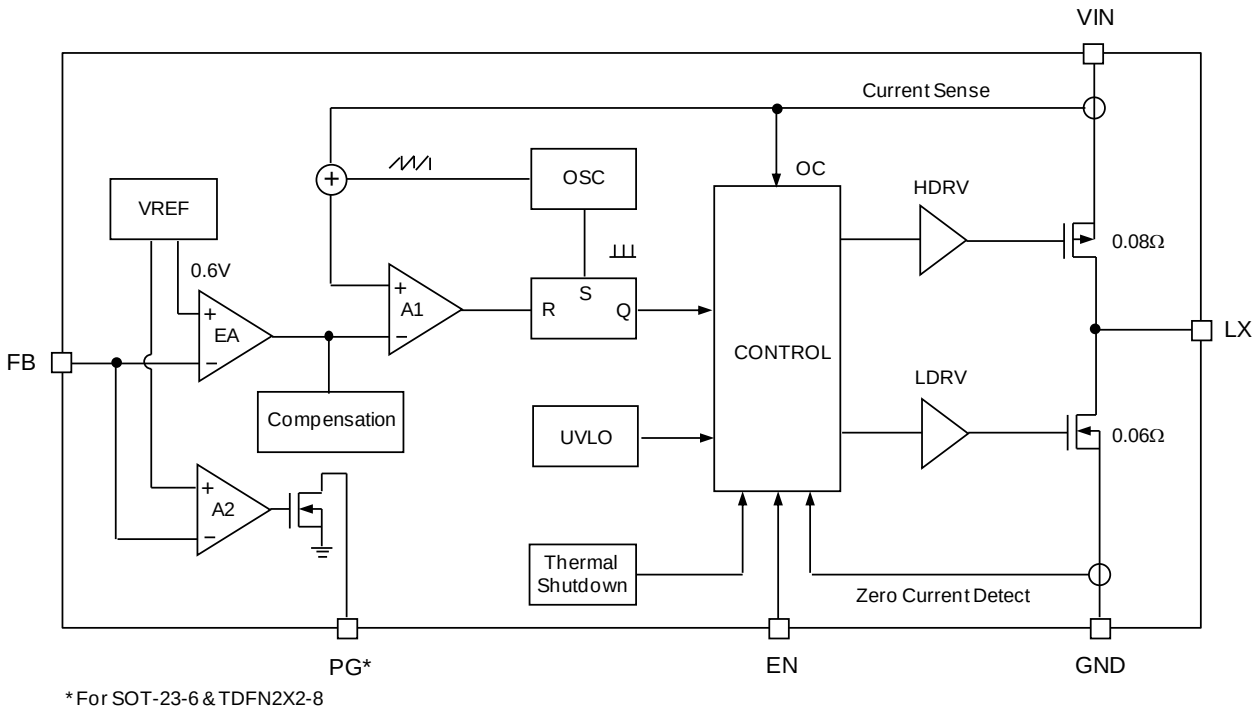


*For SOT-23-6 & TDFN2X2-8

## Function Description

### Normal Operation

The G2822 uses a constant frequency, current mode step-down architecture. Both high/low-side switches are internal. During normal operation, the internal high-side (PMOS) switch is turned on each cycle when the oscillator sets the SR latch, and turned off when the comparator (A1) resets the SR latch.The peak inductor current at which comparator (A1) resets the SR latch, is controlled by the output of error amplifier EA. While the high-side switch is off, the low-side switch is turned on until either the inductor current starts to reverse or the beginning of the next switching cycle.

### Dropout Operation

As the input supply voltage decreases to a value approaching the output voltage, the duty cycle increases toward the maximum on-time. Further reduction of the supply voltage forces the high-side switch to remain on for more than one cycle until it reaches 100% duty cycle. The output voltage is dropped from the input supply for the voltage which across the high-side switch.

### Over Temperature Protection

The G2822 has an integrated over-temperature protection circuit that monitors the device junction temperature, and stop switching if the junction temperature over 150°C. When the junction temperature cools down to 130°C, the device will restart.

### Soft-Start

During normal power-up, as the input voltage exceeds UVLO threshold, the soft-start circuitry will slowly ramp up the output voltage. This feature prevents supply inrush current and output voltage overshoots during startup conditions.

### Over Current Protection

Cycle-by-cycle peak inductor current limit is used to protect embedded switch from damage. The typical peak current limit is 4.0A. If the current through high-side FET over the current limit threshold, high-side FET is turned off immediately. Hence the maximum output current (the average of inductor current) is also restricted.

### Short-circuit Protection

Short-circuit protection will activate once the feedback voltage falls below 0.1V. The operating frequency is folded back to 50% of the normal frequency to prevent inductor current runaway. Also, hiccup-mode is adopted to further reduce power dissipation during short-circuit fault condition. When short circuit status is released, the output voltage will automatically recover and ramp up to the setting voltage.

## Application Information

### Inductor Selection

For most applications, the value of the inductor will fall in the range of 1μH to 4.7μH. Its value is chosen based on the desired ripple current. Large value inductors lower ripple current and small value inductors result in higher ripple currents. Higher $V_{IN}$ or $V_{OUT}$ also increase the ripple current $\Delta I_L$:

$$\Delta I_L = \frac{1}{fL} V_{OUT}\left(1 - \frac{V_{OUT}}{V_{IN}}\right)$$

Where f=switching frequency, L=inductance. A reasonable inductor current ripple is usually set as 1/2 to 1/5 of maximum out current.

The DC current rating of the inductor should be at least equal to the maximum load current plus half the ripple current to prevent core saturation. For better efficiency, choose a low DCR inductor.

### Capacitor Selection

In continuous mode, the source current of the top MOSFET is a square wave of duty cycle $V_{OUT}/V_{IN}$. To prevent large voltage transients, a low ESR input capacitor sized for maximum RMS current must be used. The maximum RMS capacitor current is given by:

$$C_{IN} \text{ requires } I_{RMS} \cong I_{OMAX} \frac{\sqrt{V_{OUT}(V_{IN} - V_{OUT})}}{V_{IN}}$$

This formula has a maximum at $V_{IN}=2V_{OUT}$, where $I_{RMS}=I_{OUT}/2$. This simple worst case condition is commonly used for design because even significant deviations do not offer much relief.

The selection of $C_{OUT}$ is driven by the required effective series resistance (ESR). Typically, once the ESR requirement for $C_{OUT}$ has been met, the RMS current rating generally far exceeds the $I_{RIPPLE(P-P)}$ requirement. The output ripple $\Delta V_{OUT}$ is determined by:

$$\Delta V_{OUT} \cong \Delta I_L \left(ESR + \frac{1}{8fC_{OUT}}\right)$$

For a fixed output voltage, the output ripple is highest at maximum input voltage since $\Delta I_L$ increases with input voltage.

Nowadays, higher value, lower cost ceramic capacitors are becoming available in smaller case sizes. Their high ripple current, high voltage rating and low ESR make them ideal for switching regulator applications. Because the G2822's control loop does not depend on the output capacitor's ESR for stable opera-

tion, ceramic capacitors can be used freely to achieve very low output ripple and small circuit size.

When choosing the input and output ceramic capacitors, choose the X5R or X7R dielectric formulations. These dielectrics have the best temperature and voltage characteristics of all the ceramics for given value and size.

**Output Voltage Programming**

In the adjustable version of G2822, the output voltage is set by a resistive divider according to the following formula:

$$V_{OUT} = \mathbf{0.6} \bullet \left( \mathbf{1} + \frac{R\mathbf{1}}{R\mathbf{2}} \right) \text{ Volt.}$$

**Parameters Suggestion Table**

| $V_{OUT}$(V) | R1(KΩ) | R2(KΩ) | L(μH) | $C_{OUT}$(μF) |
|---|---|---|---|---|
| 3.3 | 45 | 10 | 1 | 22x2 |
| 2.5 | 31.6 | 10 | 1 | 22x2 |
| 1.8 | 20 | 10 | 1 | 22x2 |
| 1.2 | 10 | 10 | 1 | 22x2 |
| 1.05 | 7.5 | 10 | 1 | 22x2 |

* If R2 is larger than 100k, a 10~22pF ceramic cap in parallel with R1 is recommended.

**Efficiency Considerations**

Although all dissipative elements in the circuit produce losses, one major source usually account for most of the losses in G2822 circuits: $I^2R$ losses. The $I^2R$ loss dominates the efficiency loss at medium to high load currents. To minimize the power consumption from feedback resistors, a value of between 10k and 1M for both R1 and R2 is recommended.

The $I^2R$ losses are calculated from the resistances of the internal switches, $R_{SW}$, and external inductor $R_L$. In continuous mode, the average output current flowing through inductor L is "chopped" between the main switch and the synchronous switch. Thus the series resistance looking into the LX pin is a function of both top and bottom MOSFET $R_{DS(ON)}$ and the duty cycle (D) as follows:

$$R_{SW} = (R_{DS(ON)TOP})(D)+(R_{DS(ON)BOTTOM})(1-D)$$

The $R_{DS(ON)}$ for both the top and bottom MOSFETs can be obtained from Electrical Characteristics table. Thus, to obtained $I^2R$ losses, simply add $R_{SW}$ to $R_L$ and multiply the result by the square of the average output current.

Other losses including $C_{IN}$ and $C_{OUT}$ ESR dissipative losses and inductor core losses generally account for less than 2% total additional loss.

**Checking Transient Response**

The regulator loop response can be checked by looking at the load transient response. Switching regulators take several cycles to respond to a step in load current. When a load step occurs, $V_{OUT}$ immediately shifts by an amount equal to ($\Delta I_{LOAD}$•ESR), where ESR is the effective series resistance of $C_{OUT}$. $\Delta I_{LOAD}$ also begins to charge or discharge $C_{OUT}$, which generates a feedback error signal. The regulator loop then acts to return $V_{OUT}$ to its steady-state value. During this recovery time $V_{OUT}$ can be monitored for overshoot or ringing that would indicate a stability problem. For large load transient step applications, a 10~22pF ceramic cap in parallel with R1 is recommended.

**Thermal considerations**

In most application the G2822 does not dissipate much heat due to its high efficiency. But, in applications where the G2822 is running at high ambient temperature with low supply voltage and high duty cycles, such as in dropout, the heat dissipated may exceed the maximum junction temperature of the part. If the junction temperature reaches approximately 150°C, both power switches will be turned off and the LX node will become high impedance.

Assume power dissipation on G2822 $P_D$=0.1W, ambient temperature $T_A$=70°C, thermal resistance of junction to ambient $\theta_{JA}$=250°C/W, then temperature junction $T_J = T_A + \theta_{JA} * P_D$ = 95°C.

## Package Information

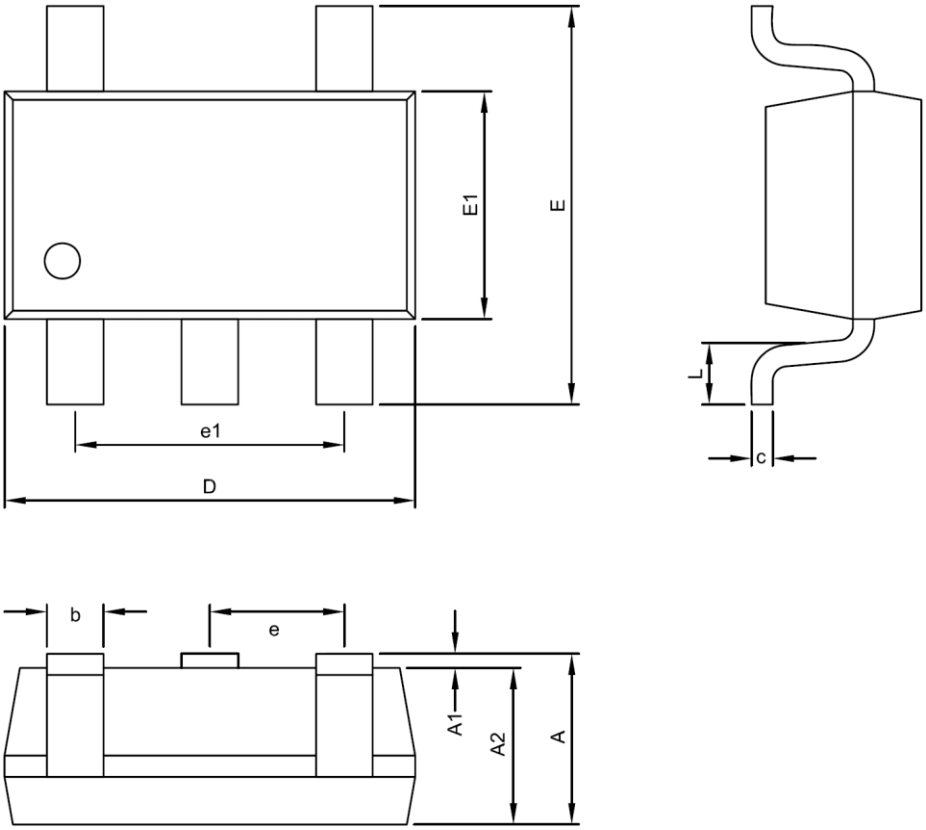


**SOT-23-5 Package**

| Symbol | DIMENSION IN MM | | | DIMENSION IN INCH | | |
|---|---|---|---|---|---|---|
| | MIN. | NOM. | MAX. | MIN. | NOM. | MAX. |
| A | 0.95 | 1.10 | 1.45 | 0.037 | 0.043 | 0.057 |
| A1 | 0.00 | - - - | 0.15 | 0.000 | - - - | 0.006 |
| A2 | 0.90 | 1.10 | 1.30 | 0.035 | 0.043 | 0.051 |
| D | 2.70 | 2.90 | 3.10 | 0.106 | 0.114 | 0.122 |
| E | 2.60 | 2.80 | 3.00 | 0.102 | 0.110 | 0.118 |
| E1 | 1.50 | 1.60 | 1.70 | 0.059 | 0.063 | 0.067 |
| c | 0.08 | 0.15 | 0.25 | 0.003 | 0.006 | 0.010 |
| b | 0.30 | 0.40 | 0.50 | 0.012 | 0.016 | 0.020 |
| e | 0.95 BSC | | | 0.037 BSC | | |
| e1 | 1.90 BSC | | | 0.075 BSC | | |
| L | 0.30 | 0.45 | 0.60 | 0.012 | 0.018 | 0.024 |

## Taping Specification

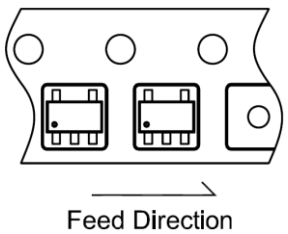


| PACKAGE | Q'TY/REEL |
|---|---|
| SOT-23-5 | 3,000 ea |

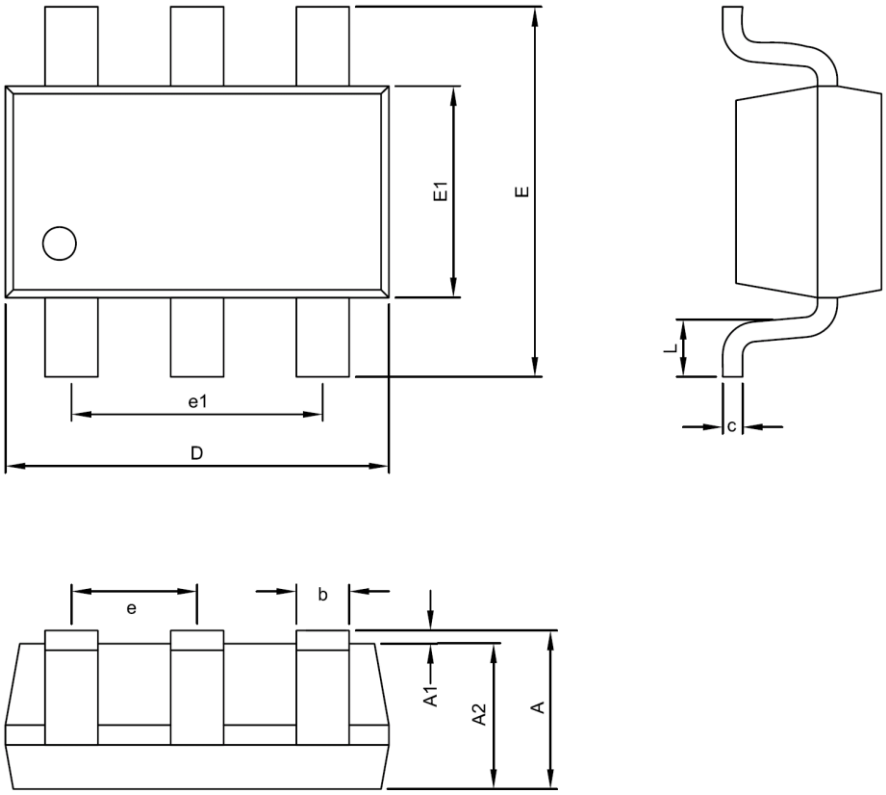


**SOT-23-6 Package**

| Symbol | DIMENSION IN MM | | | DIMENSION IN INCH | | |
|---|---|---|---|---|---|---|
| | MIN. | NOM. | MAX. | MIN. | NOM. | MAX. |
| A | 0.95 | 1.10 | 1.45 | 0.037 | 0.043 | 0.057 |
| A1 | 0.00 | - - - | 0.15 | 0.000 | - - - | 0.006 |
| A2 | 0.90 | 1.10 | 1.30 | 0.035 | 0.043 | 0.051 |
| D | 2.70 | 2.90 | 3.10 | 0.106 | 0.114 | 0.122 |
| E | 2.60 | 2.80 | 3.00 | 0.102 | 0.110 | 0.118 |
| E1 | 1.50 | 1.60 | 1.70 | 0.059 | 0.063 | 0.067 |
| c | 0.08 | 0.15 | 0.25 | 0.003 | 0.006 | 0.010 |
| b | 0.30 | 0.40 | 0.50 | 0.012 | 0.016 | 0.020 |
| e | 0.95 BSC | | | 0.037 BSC | | |
| e1 | 1.90 BSC | | | 0.075 BSC | | |
| L | 0.30 | 0.45 | 0.60 | 0.012 | 0.018 | 0.024 |

## Taping Specification

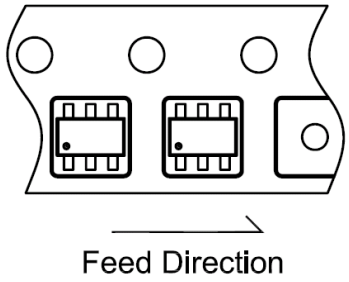


| PACKAGE | Q'TY/REEL |
|---|---|
| SOT-23-6 | 3,000 ea |

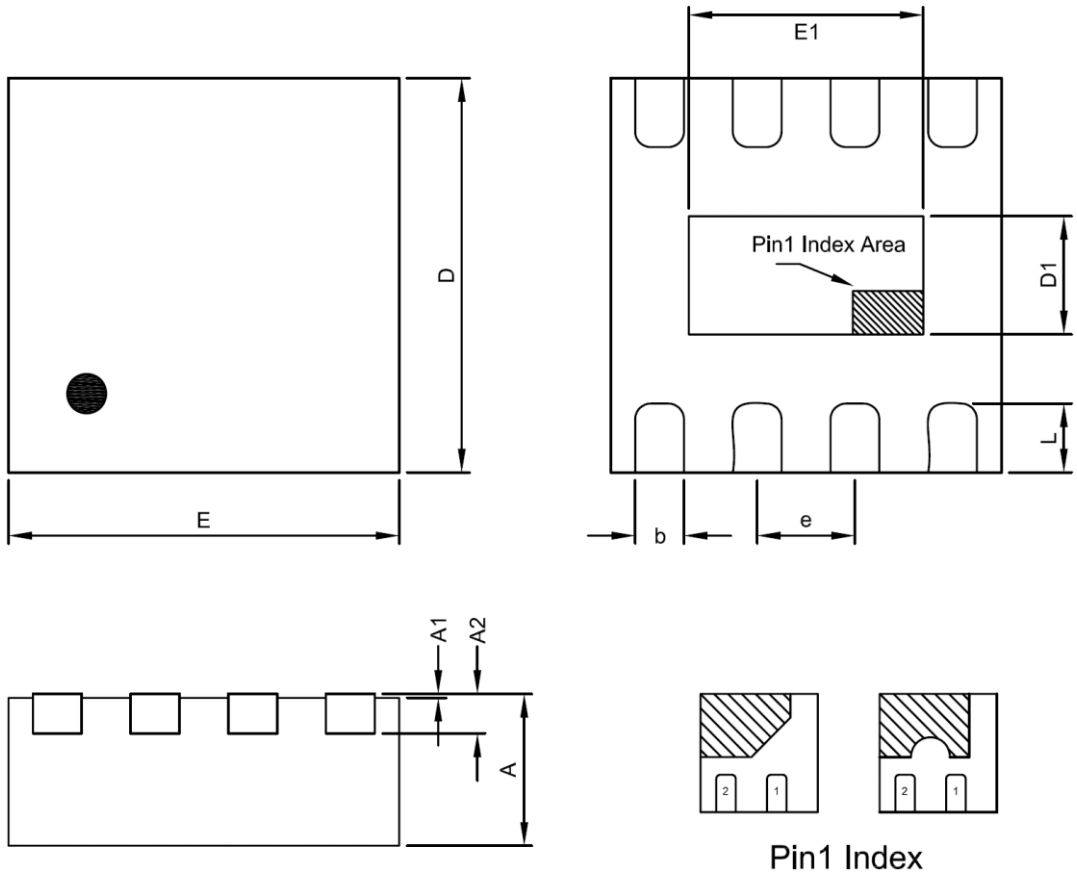


**TDFN2X2-8 Package**

| Symbol | DIMENSION IN MM | | | DIMENSION IN INCH | | |
|---|---|---|---|---|---|---|
| | MIN. | NOM. | MAX. | MIN. | NOM. | MAX. |
| A | 0.70 | 0.75 | 0.80 | 0.0276 | 0.0295 | 0.0315 |
| A1 | 0.00 | - - - | 0.05 | 0.0000 | - - - | 0.0020 |
| A2 | 0.20 REF | | | 0.0079 REF | | |
| D | 1.95 | 2.00 | 2.05 | 0.0768 | 0.0787 | 0.0807 |
| E | 1.95 | 2.00 | 2.05 | 0.0768 | 0.0787 | 0.0807 |
| D1 | 0.55 | 0.75 | 0.95 | 0.0217 | 0.0295 | 0.0374 |
| E1 | 1.15 | 1.40 | 1.65 | 0.0453 | 0.0551 | 0.0650 |
| b | 0.15 | 0.23 | 0.30 | 0.0059 | 0.0091 | 0.0118 |
| e | 0.50 BSC | | | 0.0197 BSC | | |
| L | 0.30 | 0.35 | 0.40 | 0.0118 | 0.0138 | 0.0157 |

## Taping Specification

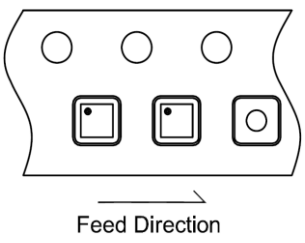


| PACKAGE | Q'TY/REEL |
|---|---|
| TDFN2X2-8 | 3,000 ea |

GMT Inc. does not assume any responsibility for use of any circuitry described, no circuit patent licenses are implied and GMT Inc. reserves the right at any time without notice to change said circuitry and specifications.