# 產品規格承認書

## SPECIFICATION FOR APPROVAL

客戶名稱 **CUSTOMER NAME**：DIVA Labs.

客戶物料編號 **CUSTOMER P/N**：

敝司製品型號 **OUR MODEL NO**：CKX3.502D-A01

敝司製品名稱 **DESCRIPTION**：PHONE JACK

本廠工程確認簽章 **APPROVED BY ENGINEERING:**

| 制　作<br>**MADE BY** | 批　准<br>**APPROVED BY** | 工程蓋章<br>**TECHNICAL** |
|---|---|---|
| 蒋慧琦 | 王运新 | |

客戶確認簽章 **APPROVED BY CUSTOMER**：

| 電子工程師<br>**Electronic Engineer** | 研發工程師<br>**R&D Engineer** | 批　准<br>**APPROVED BY** |
|---|---|---|
| | | |


永成功電塑有限公司

**YONGCHENGGONG ELECTRONICS CO.,LTD**

地址：浙江省溫州市烏牛工業園區（郵編 P.C：325103）

TEL：0086-577-67398288　67301111　　FAX：0086-577-67396278

E-mail: ycg@cnycg.com　　網址：**www.cnycg.com**

RoHS

| REV. | ECN NO. | MODIFIED MARK | REVISED | DATE |
|---|---|---|---|---|
| A6 | ECN2204010 | 变更P.C.B Layout与客户一致,<br>接地脚加凸点 | L.Q.Guo | 03/31'22 |

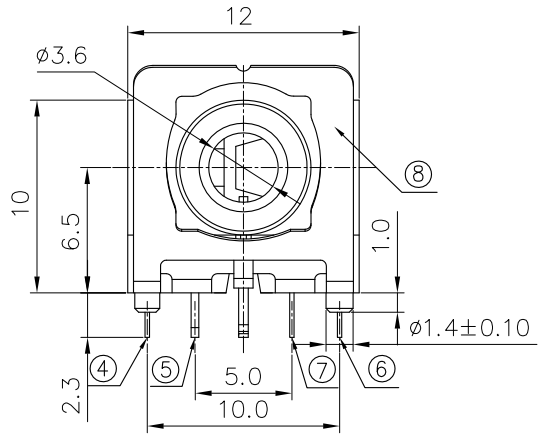


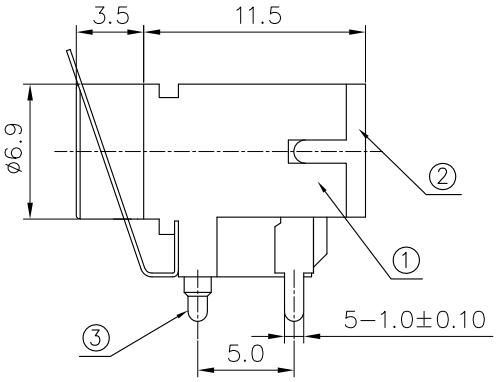


NOTES:

1.ELECTCAL CHARACTERISTICS:

1-1.CONTACT CURRENT RATING: 1A.

1-2.CONTACT VOLTAGE RATING: 12V. DC.

1-3.CONTACT RESISTANCE: 30mΩ, MAX.

1-4.DIELECTRIC WITHSTANDING VOLTAGE: 500V. AC. for 1 MINUTE

1-5.INSULATION RESISTANCE: 100 MΩ, MIN.AT 250V. DC

2.MECHANICAL CHARACTERISTICS:

2-1.DURABILITY: 5000 CYCLES.

2-2.INSERTION AND EXTRACTION FORCE:

2-2.1.INSERTION FORCE:30N MAX.

2-2.2.EXTRACTION FORCE:3N MIN.

3.ENVIRENMENT CHARACTERISTICS:

3-1.OPERATING TEMPERATURE.-10℃~+85℃

3-2.HUMIDTY:45%~85% RH.

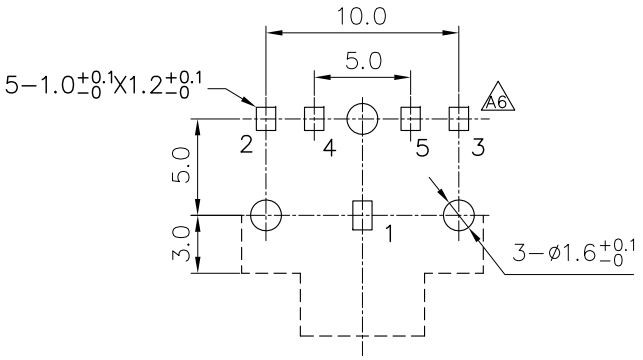


Recommend PCB Layout
PCB Top View
Tolerance: ±0.05mm

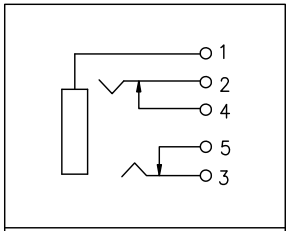


Schematic

| NO. | PART NAME | TER'NO. | Q'TY | MATERIAL | PLATING & COLOR |
|---|---|---|---|---|---|
| 8 | SHIELD | | 1 | SUS | ——— |
| 7 | TERMINAL 5 | 5 | 1 | H62 | Ag-Plated |
| 6 | TERMINAL 3 | 3 | 1 | QSn6.5-0.1 | Ag-Plated |
| 5 | TERMINAL 4 | 4 | 1 | H62 | Ag-Plated |
| 4 | TERMINAL 2 | 2 | 1 | QSn6.5-0.1 | Ag-Plated |
| 3 | TERMINAL 1 | 1 | 1 | H62 | Ag-Plated |
| 2 | COVER | | 1 | PBT-4815 UL94 V-0 | BLACK |
| 1 | HOUSING | | 1 | PBT-4815 UL94 V-0 | BLACK |

UNLESS OTHERWISE SPECIFIED TOLERANCES

DECIMALS: X :±0.38 X.X :±0.30 X.XX :±0.20

ANGLES: X :±2° X.X :±1°

DRAWING: CUSTOMER

| | | | | |
|---|---|---|---|---|
| SCALE: 1:1 | SIZE: A4 | VIEW: | **MODEL TYPE:** | |
| UNIT: mm | REV.: A6 | SHEET: 1/1 | PHONE JACK | |
| DSND | E.L.Gu | DATE | 2022.03.31 | **PART NO:** |
| CHKD | Y.X.Wang | DATE | 2022.03.31 | CKX3.502D-A01 |
| APVD | Y.W.Jiang | DATE | 2022.03.31 | DWN. NO.: RD01-992 |

YCG YONG CHENGGONG ELECTRONICS CO., LTD.

# SPECIFICATION

Model Type: PHONE JACK

## PARTS LIST

Part No.:CKX3.502D-A01

| No. | PART NAME | Q'TY | RAW MATERIAL | NAME OF MATERIAL | UL FLAME CLASS | UL FILE NO. | MANUFACTURE OF RAW MATERIAL | FINISH & COLOR | |
|---|---|---|---|---|---|---|---|---|---|
| 1 | HOUSING/COVER | 1 | PBT | 4815 | UL94 V-0 | E304813 | CHANG CHUN CHEMICAL(ZHANGZHOU)CO LTD | BLACK | |
| 2 | TERMINAL1/3/5 | 1 | BRASS | H62 | / | / | 浙江永成功电塑有限公司<br>（宁波金田铜业有限公司） | $1^{st}$：Ni=0.30μm'Min. | PLATED |
| | | | | | | | 温州聚友表面处理有限公司 | $2^{nd}$：Ag=0.10μm'Min. | |
| 3 | TERMINAL/2/4 | 1 | PHOSPHOR BRONZE | QSn6.5-0.1 | / | / | 宁波金田铜业有限公司 | $1^{st}$：Ni=0.30μm'Min. | PLATED |
| | | | | | | | 温州聚友表面处理有限公司 | $2^{nd}$：Ag=0.10μm'Min. | |
| 4 | SHIELD | 1 | Stailess steel | SUS 304 | / | / | 浙江永成功电塑有限公司<br>（无锡华生精密材料有限公司） | / | |

YONGCHENGGONG ELECTRONICS CO.,LTD

RoHS

| REV. | ECN NO. | MODIFIED MARK | REVISED | DATE |
|---|---|---|---|---|
| A1 | ———— | Frist Release | L.Q.Guo | 04/29'14 |

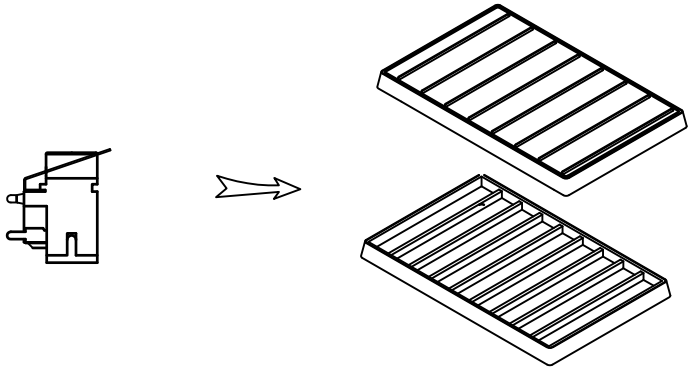

110PCS/盒

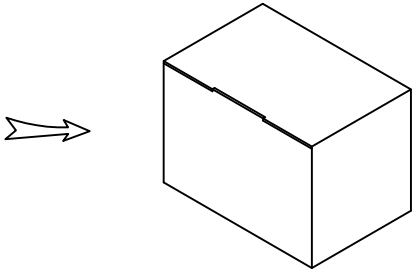

770PCS/内箱

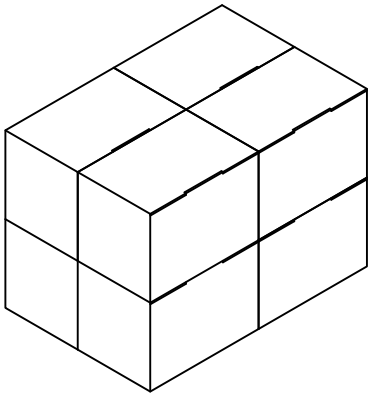

6160PCS/8内箱

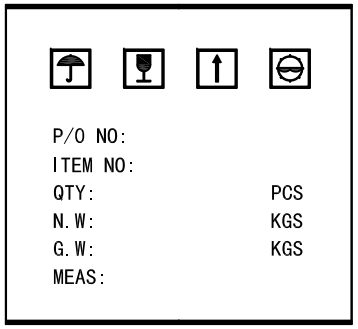


包装箱侧面标示帖图

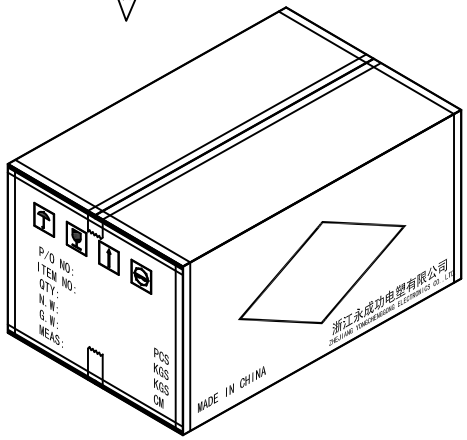


6160PCS/外箱

一、每盘吸塑盒装 110PCS,每盒吸塑盖。
二、每7盒为一捆，用PE膜缠好，装入内箱中。
　　每内盒数量：110PCS/盒*7/内箱=770PCS。
三、每外箱装8内箱。
　　每箱数量：770PCS/箱*8/箱=6160PCS。
四、产品单重：1.793g
　　每箱净重：11.05kg
标签内容及格式依各个客户要求为准。

| | | | | | |
|---|---|---|---|---|---|
| UNLESS OTHERWISE SPECIFIED TOLERANCES<br>DECIMALS: ANGLES:<br>XXX :±.7 XX :±3°<br>XX :±.5 X :±2°<br>X :±.3 X.X :±1° | SCALE:Free | SIZE: A4 | VIEW: | MODEL TYPE: PHONE JACK | |
| | UNIT: mm | REV.: A1 | SHEET:1/1 | | |
| | DSND | L.Q.Guo | DATE | 2014.04.29 | PART NO: （包装规范） |
| | CHKD | Peng.Zhou | DATE | 2014.04.29 | CKX3.502D-A01 |
| | APVD | Y.X.Wang | DATE | 2014.04.29 | DWN. NO.: RD03-234 |
| DRAWING: PACKING | YONG CHENGGONG ELECTRONICS CO.,LTD. | | | | |

# 浙江永成功电塑有限公司
## ZHEJIANG YONGCHENGGONG ELECTRIC PLASTIC CO.,LTD

| | | | | |
|---|---|---|---|---|
| **Product Specification** | Discription:<br>PHONE JACK | DOC. No.: | Rev.:<br>A | ECN: |
| **Part Series:**<br>CKX3.5 Phone Jack | Part Name:<br>CKX3.502D-A01<br>Part NO.: | Approved/Date | Check/Date | Design/date |
| | | Y.X.Wang | P.Zhou | H.Q.Jiang |

**Revision History**

| Rev | ECN No. | Description | Design /Date | Approved /Date |
|---|---|---|---|---|
| A | ECN1911009 | First Release | H.Q.Jiang / 2021.08.19 | Yunxin.Wang/ 2021.08.19 |
| | | | | |
| | | | | |
| | | | | |
| | | | | |
| | | | | |
| | | | | |
| | | | | |
| | | | | |
| | | | | |
| | | | | |
| | | | | |
| | | | | |
| | | | | |
| | | | | |
| | | | | |
| | | | | |
| | | | | |
| | | | | |
| | | | | |
| | | | | |
| | | | | |
| | | | | |
| | | | | |

## Content

1. Scope .....3
2. Applicable Documents .....3
2.1. YCG Electronics Documents .....3
2.2. EIA standards and Other specifications .....3
3. Requirements .....3
3.1 Design, Structure and appearance .....3
3.2 Test condition .....3
3.3 Materials/Finish .....3
3.4 Application performance and storage requirement.....3
4. Performance and Test Description .....3
4.1 Visual examination of produce .....4
4.2 Electrical Characteristic.....4
4.3 Mechanical Characteristic.....4
4.4 Environmental Characteristic.....5~6
5. Standard dimension gauge and mating plug .....7

## 1. Scope

This specification contains the requirements for product performance, test methods and quality assurance of YongChengGong's **5Pin Phone JACK 3.5 CONNECTOR (PJ-3179HP-HF)** connector.

## 2. Applicable Documents

The following documents are parts of this specification. If confliction occurs between the requirements of this specification and the product drawing, the product drawing should be prior. If confliction occurs between the requirements of this specification and the referenced documents, this specification should be prior.

### 2.1. YCG Electronics Documents:

1)5Pin Phone JACK 3.5 CONNECTOR **(CKX3.5***-***：** Product drawing

### 2.2. EIA Standards and Other Specifications

1) EIA 364 : Electrical Connector/Socket Test Procedures Including Environmental Classifications
2) UL94 :Classification V-0

## 3. Requirements

### 3.1. Design, Structure and Appearance

1) The product of the design, construction and physical dimensions shall be capable of meeting the requirements of Product drawing.
2) There shall be no scratches, cracks, stains or warp that are detrimental to the function or the appearance of the connector.

### 3.2. Test condition

Unless otherwise specified, all measurements shall be performed within the following lab conditions:

Storage Temperature : -25°C to 85°C
Relative Humidity : 25% to 85%
Air Pressure：860 hPa to 1060 hPa.

### 3.3 Materials/Finish

Material/Finish: See the latest Product drawing

### 3.4 Application performance and storage requirement

1) Voltage rating: 12V DC
2) Current rating: 1.0A DC
3) Operating temperature: -10 to +85ºC

## 4. Performance and Test Description

Product shall be designed to meet the electrical, mechanical and environmental performance requirements specified herein. All tests shall be done in the room temperature, unless otherwise specified.

## 4.1 Visual examination of product

| | Test Item | Test Condition | Specification |
|---|---|---|---|
| 4.1.1 | Examination of Product | EIA-364-18B;<br>Visual inspection, no physical damage | Meets requirement of customer drawing and specifications |

## 4.2 Electrical Characteristic

| | | | | |
|---|---|---|---|---|
| 4.2.1 | Contact Resistance | EIA-364-06C;<br>Subject mated contacts assembled in housing to 20mV Max. open circuit at 100mA Max.<br>The mating plug used shall be cleaned and free from oxidation film of the surface,<br>The resistance measurement shall not be included value of plug | Between a jack terminal of the jack and that of the mate plug | 20mΩ Max. |
| 4.2.2 | Insulation Resistance | EIA-364-21C;<br>Test between adjacent contacts of mated and unmated connector assembled at DC 500V for 1 minute | Between the conductors which should not make contact under normal conditions | 100MΩ Min. |
| 4.2.3 | Dielectric Withstanding Voltage | EIA-364-20C;<br>Test between adjacent contacts of mated and unmated connector voltage AC 500V at 1 minute | Between the conductors which should not make contact under normal conditions | Without damage to parts, arching or breakdown, etc. |

## 4.3 Mechanical Characteristic

| | | | | |
|---|---|---|---|---|
| 4.3.1 | Operating force | EIA-364-13D;<br>Insertion and withdrawal force shall be measured after inserting and withdrawing 3 times by using a gauge of standard dimensions (refer to Clause 5) | Insertion force | 3N ~30N |
| | | | Withdrawal force | 3N ~30N |
| 4.3.2 | Durability | EIA-364-09C;<br>Insertion and withdrawing of 3 000 cycles shall be made by the mating plug (refer to Clause 5) or a standard dimension gauge, (4 pole plug, refer to Clause 5, grease applied) at a speed of 10 to 20 times/min. | Examination of Product | Refer to 4.1.1 |
| | | | Electrical Characteristic | Refer to 4.2.1, 4.2.2, 4.2.3 |
| | | | Insertion force | 3N ~30N |
| | | | Withdrawal force | 3N ~30N |

## 4.4 Environmental Characteristic

| | | | |
|---|---|---|---|
| 4.4.1 | Low Temperature | Refer to EIA-364-59A;<br>Temperature: -10 ℃; Humidity:N.A.<br>Duration: 16 hours;<br>Then the specimens should be left in the chamber and the temperature should be gradually increased to room ambient temperature. The specimens should be measured after 1 hour Min, but less than 2 hours after removal from the chamber. | (1).Dimensional requirements should be satisfied.<br>(2).Electrical characteristics and mechanical characteristics shall be satisfied |
| 4.4.2 | Heat | Temperature: 85 ±3 ℃; Humidity: 20 % RH;<br>Duration: 24 hours;<br>Then the specimens should be left in the chamber and the temperature should be gradually reduced to room ambient temperature. The specimens should be measured after 1 hour Min, but less than 2 hours after removal from the chamber. | |
| 4.4.3 | Humidity | Refer to EIA-364-31B;<br>The specimens should be placed in a chamber and subjected to a relative humidity of 90% to 95% and a temperature of 40±3 ℃ for 16 hours. Then the specimens should be left in the chamber and the temperature should be gradually reduced to room ambient temperature. The specimens should be measured after 1 hour Min, but less than 2 hours after removal from the chamber. | |
| 4.4.4 | Temperature Shock | Refer to EIA-364-32D;<br>The specimens should be subjected to 10 continuous cycles shown in figure below. After that, the specimens should be left in the room temperature environment for 1 hour but less than 2 hours, then the specimens can be measured.<br>* Temperature shall be reduced from 85 ℃ to -10 within 30 min.<br>* Humidity uncontrolled at a temperature less than 85 ℃<br>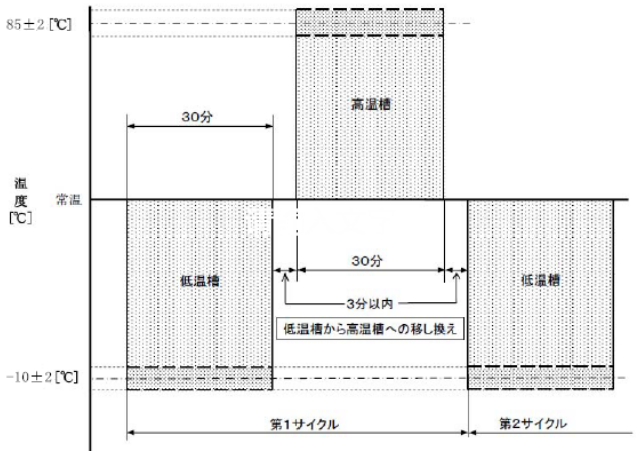<br> | |

| | | | |
|---|---|---|---|
| 4.4.5 | Solderability | Refer to EIA-364-52;<br>The object of this test procedure is to detail a uniform test method for determining connector solderability .The test procedure contained herein utilizes the solder dip technique .It is not intend to test or evaluate solder cup ,solder eyelet, other hand—soldered type or SMT type terminations.<br>Subject unmated connector should be tested according to the condition listed below:<br>Soldering Temprature:245±5℃;<br>Soldering Time:3±0.5 seconds;<br>Flux: Inactivated | Continuous solder coating with a min. 95% coverage |
| 4.4.6 | Resistance to soldering heat | Notice：<br>1.Pre-heating temperature is 100~120℃,for a duration about 86~100 seconds,the speed of raise temperatue Is 1~2 ℃/sec.<br>2.The peak temperature is 250~258℃,the duration for 3~4 seconds.<br>3.The speed of refrigerate is 1~3℃/sec.<br>4.The total time of flow solder is about 3.5minutes.<br>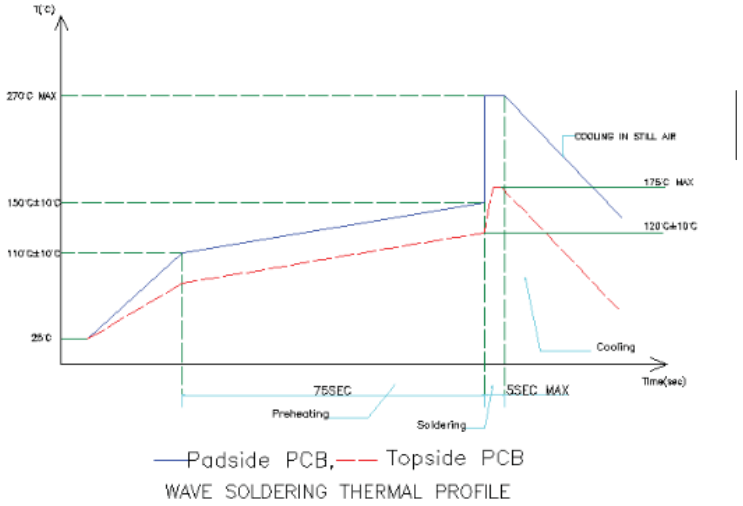<br><br>—Padside PCB,—— Topside PCB<br>WAVE SOLDERING THERMAL PROFILE<br>Soldering iron method<br>Range temperature:340~380 ℃<br>Application time of soldering iron: 5s Max. | (1).There should be no damage on appearance.<br>(2).Electrical characteristics and mechanical characteristics shall be satisfied |
| 4.4.7 | Salt Spray | Refer to EIA-364-26B;<br>Salt Spray condition:<br>1.Temperature : 35 ±2°C; 2.Humidity : 95 ~ 98% ( R.H. );<br>3.Salt Consistency: 5±1%; 4.PH Value : 6.5 ~ 7.2;<br>5. Duration: 48hours;<br>Note: Remove the salt deposits by a gentle wash or dip in running water, follow by natural drying under room temperature for 2 hours before the measurement. | (1).Appearance :No damage<br>(2).Contact resistance 100 mΩ. |
| 4.4.8 | Vibration | Refer to EIA-364-28E;<br>Mated a test plug, apply vibration to the connector in three different mutually perpendicular directions, including the mating axis, at frequencies from 10 to 55Hz, for 2 hour in each X.Y.Z.axes: | (1).There should be no damage on appearance.<br>(2).Electrical characteristics and mechanical characteristics shall be satisfied |

| | | | |
|---|---|---|---|
| 4.4.9 | The temperature Of the BPR | Solder paste temperature curve at low temperature<br>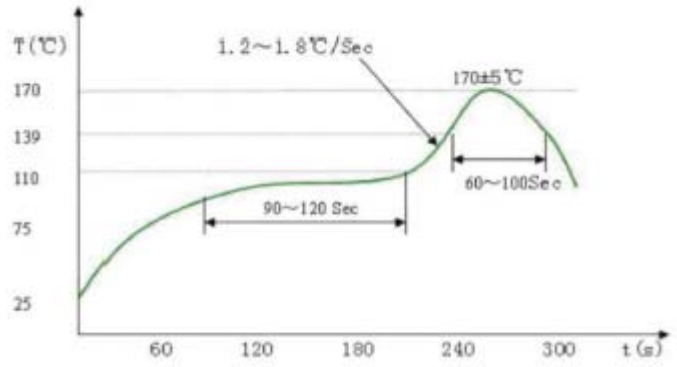<br><br>Return the highest temperature of about 180℃ above,time for 60~100s; | (1).There should be no damage on appearance.<br>(2).Electrical characteristics and mechanical characteristics shall be satisfied |

## 5. Standard dimension gauge and mating plug

### 5.1 dimension gauge

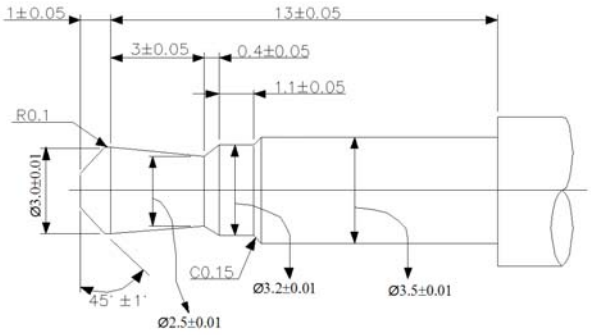


Roughness of the surface 


Materials: : Stainless Steel

### 5.2 mating plug

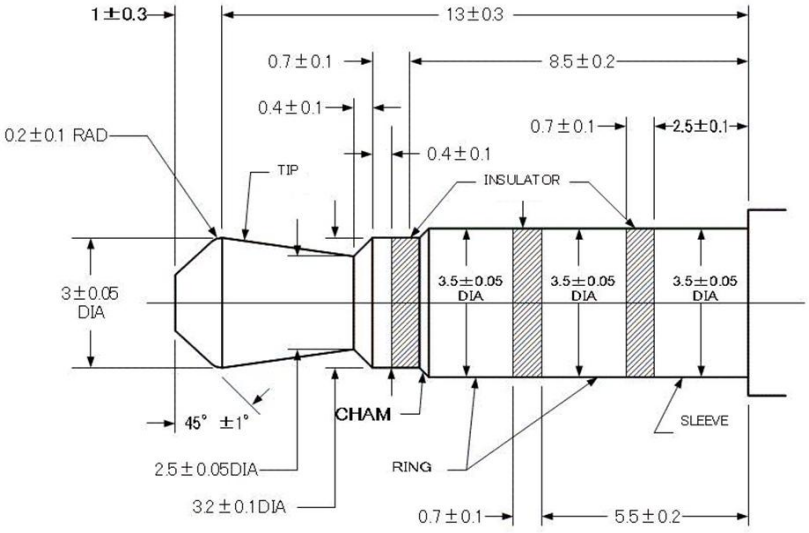


The origin of the mate plug shall be referred to EIAJ RC5325 “4-Pole miniature concentric plugs and jacks”