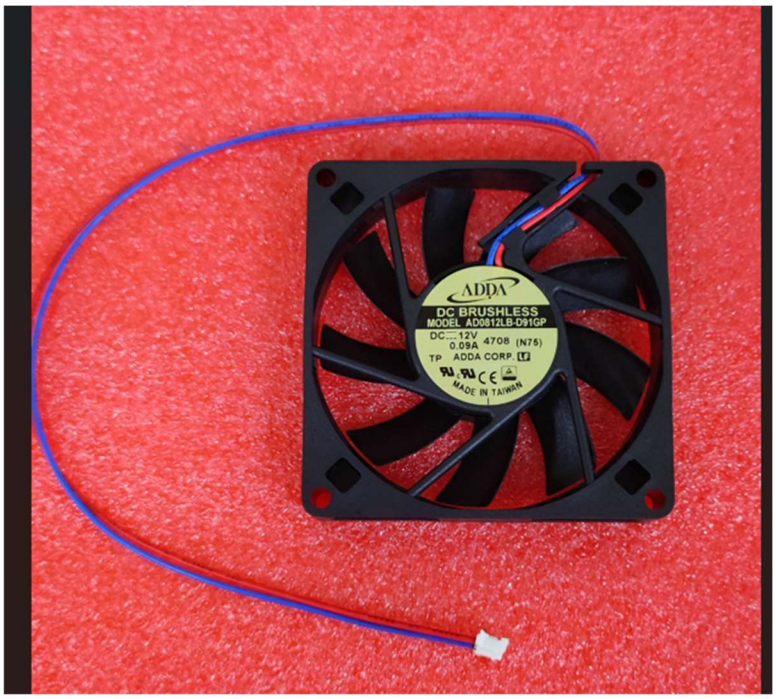

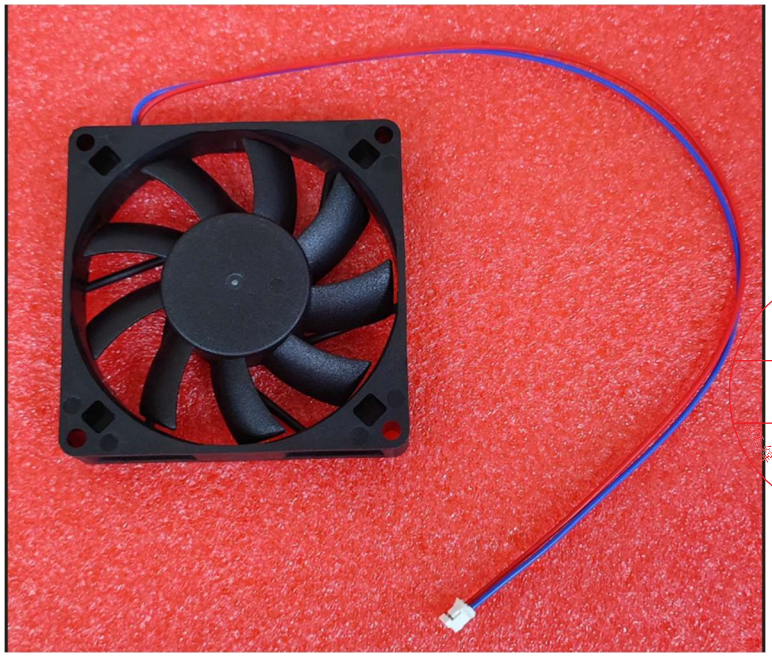

設計驗證
工程課
2024-07-30
發行
科技開發股份有限公司



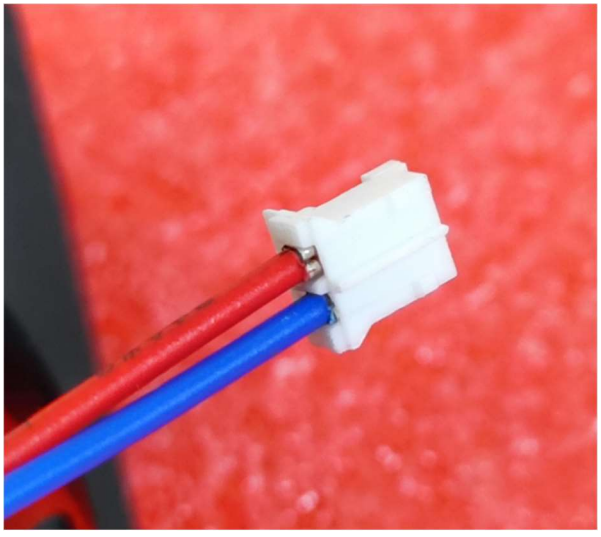

SPECIFICATION FOR APPROVAL

CUSTOMER : 鈺瑋

CUSTOMER PART NO. : 3ZFAN000450 (Z0534)

CUSTOMER APPROVED	APPROVED BY	CHECKED BY		PREPARED BY
設計驗證 工程課 2024-07-30 發行	研發處 2024.07.18 簡文榮	研發處 2024.07.18 洪偉恩	研發處 2024.07.18 王聖皓	研發處 2024.07.18 陳佩如

MODEL NO. : AD0812LB-D91GP P.S. (N75)

DESCRIPTION :

SPEC NO. : SA-0120240701007

ISSUE DATE : 2024.07.18

REVISION : A01

協禧電機股份有限公司 研發處 2024.07.18 發行章

THIS OFFER IS MADE ACCORDING TO YOUR CURRENT INQUIRY. UNLESS OTHERWISE REVISED, THIS SPECIFICATION WILL BE FINAL FOR ALL FUTURE PRODUCTION OF ORDERS FROM YOUR RESPECTED COMPANY

KINDLY STUDY IN DETAILS AND RETURN TO US THE DUPLICATE DULY SIGNED AS YOUR CONFIRMATION OF SAME.

ADDA CORPORATION

Revised Record

Rev.	Revision Description	Change page	Date
A00	Preliminary		2024.07.02
A01	Add the CUSTOMER PART NO. →3ZFAN000450 、 Modify the drawing	cover、4/5	2024.07.18

協禧電機股份有限公司
研發處
2024.07.18
發行章

D A T A - S H E E T

Engineering

BRUSHLESS AXIAL COOLING FANS

Customer	:	鈺瑋	Ref: (RoHS)
Adda Model No	:	AD0812LB-D91GP P.S: (N75)	
Samples attached	:	Piece(s),	
Safety Approval	:	UL,CUL,TUV,CE,UKCA	TUV:EN 62368-1 2014+A11 UL:UL507 CE:EN 61000-6-1:2019 EN 61000-6-3:2021 UKCA:BS EN 61000-6-1:2019 BS EN 61000-6-3:2021

Specifications

ITEM		SPECIFICATION / CONDITION
BEARING TYPE	:	TWO BALL
RATED VOLTAGE	:	12 VDC
OPERATING VOLTAGE RANGE	:	10.8 VDC ─ 13.2 VDC
START─UP VOLTAGE	:	7 VDC , NORMAL
RATED CURRENT	:	0.09 Amp + 10 %MAX
		(Approximately REAL CURRENT 0.06 Amp)
RATED POWER	:	1.08 Watt + 10 %MAX
		(Approximately REAL POWER 0.72 Watt)
RATED SPEED	:	2000 RPM ± 10 %
		(IN FREE AIR AT RATED VOLTAGE)
AIR FLOW	:	19.477 CFM (min.: 17.529 CFM)
AIR FLOW	:	0.551 CMM (min.: 0.495 CMM)
		(IN FREE AIR AT RATED VOLTAGE)
STATIC AIR PRESSURE	:	0.051 Inch H_2O (min.: 0.041 Inch H_2O)
STATIC AIR PRESSURE	:	1.295 mm H_2O (min.: 1.048 mm H_2O)
		(IN FREE AIR AT RATED VOLTAGE)
NOISE LEVEL	:	24.4 dB (A) (max.: 28.4 dB(A))
MOTOR PROTECTION	:	BY IC
POLARITY PROTECTION	:	YES
LIFE EXPECTANCY	:	70000 Hours at 40℃ / 65% RH
NET WEIGHT	:	63 Gram. (REF.)
PACKING	:	225 pcs. Per Export Carton.



Unless otherwise stated, the relative humidity is 65%, and the temperature is 25℃ for the standard testing.

Should you have any doubt, please refer to the environmental conditions specified in the acknowledgement document.

Real Current and Real Power are for reference.

SPECIFICATION

1・0 SCOPE

1.1 If the information or other related document is inconsistent with this acknowledgement document, please refer to the acknowledge document.

1.2 This documentation defines the mechanical & electrical characteristics of DC brushless fans.

1.3 The specification of this product is described in details in the acknowledgement document. No guarantee is given to our product under the use of over specifications.

1.4 For any change or amendment to the specifications, such change will be noticed in writing beforehand.

1.5 If the product is used on the MIS system, please specify the specification in the purchase order.

2・0 MATERIAL

2・1 Frame : UL94V-0 Glass Filled polyester (P.B.T)

2・2 Fan Blade : UL94V-0 Glass Filled polyester (P.B.T)

2・3 RoHS : (V) YES

HF : ( ) YES

3・0 DIMENSIONS & CONSTRUCTION

All dimensions, Direction of rotation and air flow were specified as per drawing attached.

4・0 CHARACTERISTICS & DEFINITION

4・1 Rated Current/Rated Speed/Rated Power：

All shall be measured after 3 minutes of continuous rotation at rated voltage in free air.

4・2 Start Voltage ：The voltage which is able to start the fan to operate by suddenly switching ’ ON ’ .

4・3 Locked Rotor Current：Locked current shall be measured within one minute of rotor locked, after 3 minutes of continuous rotation at rated voltage in free air.

4・4 Air Flow & Static Pressure：The air flow data and static pressures should be determined in accordance with AMCA-210 standard in a doublechamber testing with intake-side measurement.

4・5 Noise Level ：The measurement of noise level is carried out with referenceto ISO7779 in a semi-anechoic chamber with the microphone positioned 1 meter from the air intake.Testing fan shall be hung in clean air .

NOISE LEVEL MEASUREMENT

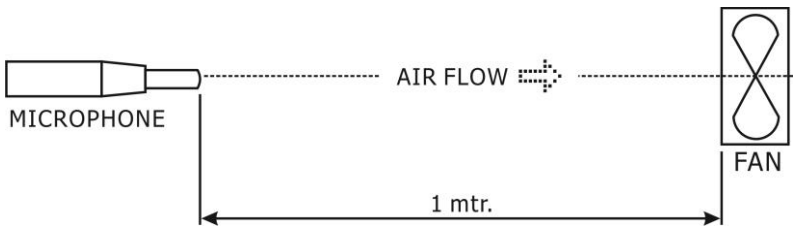

協禧電機股份有限公司 研發處 2024.07.18 發行章

5.0 MECHANICAL INSPECTION

5.1 Rotation Direction
Counterclockwise when look into impeller side.

5.2 Protection
All fans have integrated protection against locked rotor condition so that there will be no damage to winding or any electronic component.
Restarting is automatic as soon as any constraint to rotation has been released.
As fan placed at dead angle position, and the switch was changed from off to on. Restarting was automatic normal as soon as and proved that this fan is good fan.

5.3 Locked Rotor Protection
No damage shall be found after 72 hours continuously at condition of rotation locked.
Restarting is automatic as soon as constraint to running has been released.

5.4 Avoid the damage, check the correct voltage and proper polarity before connecting with power.

5.5 Free Drop Shock
In minimum package condition, the fan should withstand drops on any three faces from a height of 30cm onto a wood board of 10mm thick.

5.6 Please do not stick a grease and/or an oil to the fan housing or blade which may have a harmful influence by a chemical reaction at high humidity.

5.7 If the fan is reinstalled, please pay special attention to the noise due to the vibration (or resonance).

5.8 During the testing of the fan, please make sure the finger guard is used for safety.

6.0 ELECTRICAL INSPECTION

6.1 Insulation Resistance
Not less than 10M ohm between housing and positive end of lead wire (red) at 500V DC.

6.2 Dielectric Strength
No damage should be found at 500 VAC for 60 seconds, measured with 1mA trip current between housing and positive end of lead wire.

6.3 Life Expectancy
The continous duty life at given temperature after which, 90% of testing units shall still be running.

6.4 While the fan is running, do not intentionally lock the fan for a long time since the overheating of the motor produced by the long-time locking will damage the fan.

7.0 ENVIRONMENTAL

7.1 Improper use such as disassembling the fan, being covered with dust, or dipping the fan in water that results in defects is not covered in the warranty. Do not use the fan in the environment with corrosive air or liquid. ADDA does not warrant damage to the product caused by outside elements (as dust, condensation, humidity or insects).

7.2 Operating Temperature:-10℃ to +70℃ .

7.3 Operating Humidity:65%+/-20% RH.

7.4 Storage Temperature:-40℃ to +70 ℃.

7.5 Storage Humidity:65%+/-20% RH.

7.6 Do not place or store the fan in the environment with high/low temperature/humidity. If the fan is stored for more than 6 months, functional test is highly recommended before using.

協禧電機股份有限公司 研發處 2024.07.18 發行章

8.0 REMARKS

8.1 Material and construction are subject to change without advance notice. The changes should be within specification.

8.2 All fans shall meet the quality inspection under sampling plan MIL-STD-105E as follow:

Critical	0.25%
Major	1.00%
Minor	2.50%

9.0 OUTLINE STYLING & DIMENSIONS

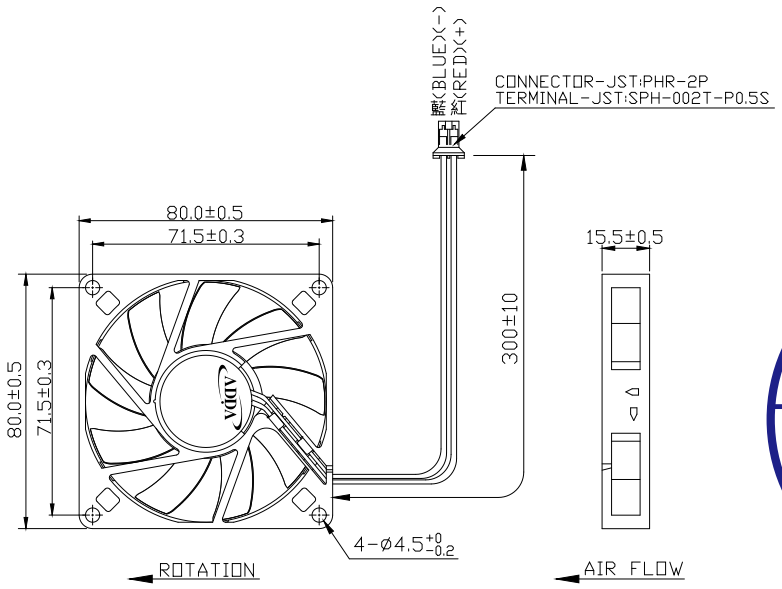



LEAD WIRES : UL 1007, AWG24 ;
Red = positive ; Blue = negative.

10.0 Notes:

10.1 Please do not touch and push Fan Blade with fingers or others,fan blade and ball bearings may be damaged and it causes noise defect.And suitable fan guard should be fitted to the fan to guard against any potential for personal injury.

10.2 Do not carry the fan by its lead wires.

10.3 If the fan does not have the polarity protection function, the connection of the colored wires should be red + red, and black + black, or else the fan will be damaged in no time.

10.4 For the models without reverse connection of polarity protection, please do not connect the lead wire in reverse

10.5 Please don't install this fan in series with 2x voltage inputs. For example, if a single fan rated at 12V, then don't install two of them in series with 24V input.

10.6 Every specific fan is designed for its certain application (project). Therefore, if you want to use this fan in other application (project), please inform ADDA first so that we can confirm whether there is any issue which might be incurred from the reason of this different application (project) or not.

10.7 The"Life Expectancy" of this fan has not been evaluated for use in combination with any end application. Therefore,the Life Expectancy in the Test Reports(L10 and MTTF Report) that relate to this fan is for reference only and shall not construe any kind of warranty of ADDA to the life of any specific fan,either expressed or implied.

10.8 The period of product warranty,unless otherwise agreed by ADDA in writing,shall be 12 months starting from the date of production.

10.9 In Lead Wire, there is a possibility to come off from frame.

10.10 In order to avoid abnormal bumping or interference caused by deformed impeller when fan is fastened, suggested distance of at least 0.5mm is strongly reserved in front of the frame (the sight from the impeller face) .

10.11 Hot swapping or Hot plugging is not allowed to cause damage to fans. Notice in advance is strongly requested if design for Hot swapping or Hot plugging is needed.

Fan Performance Curve

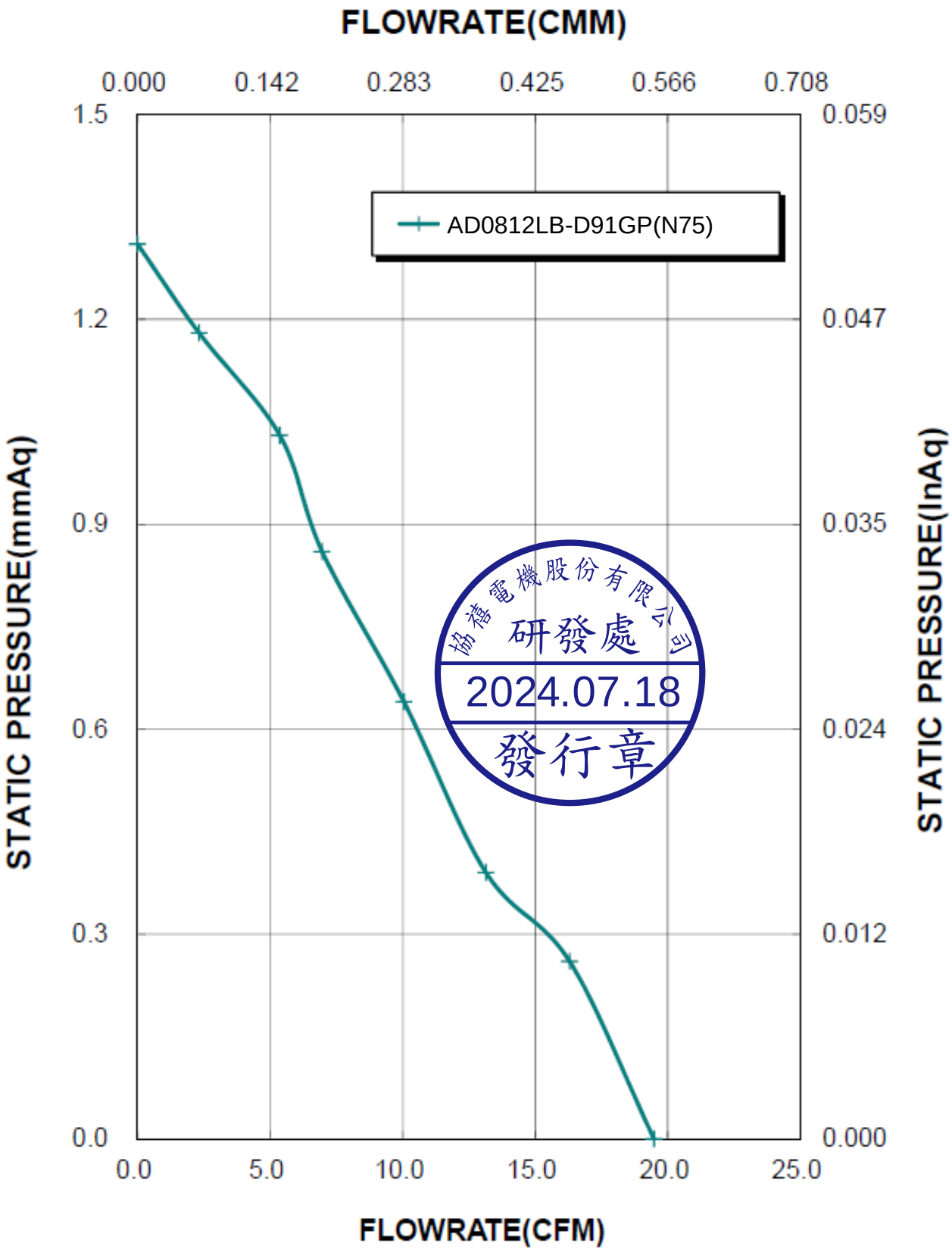

外框運用說明 (Frame Type Coordinated with Screw Type Recommended)

*標準框建議使用自攻螺絲,RIB框建議使用機械螺絲。

• We recommend to use self-tapping screw for the standard frame and machine screw for the RIB frame.

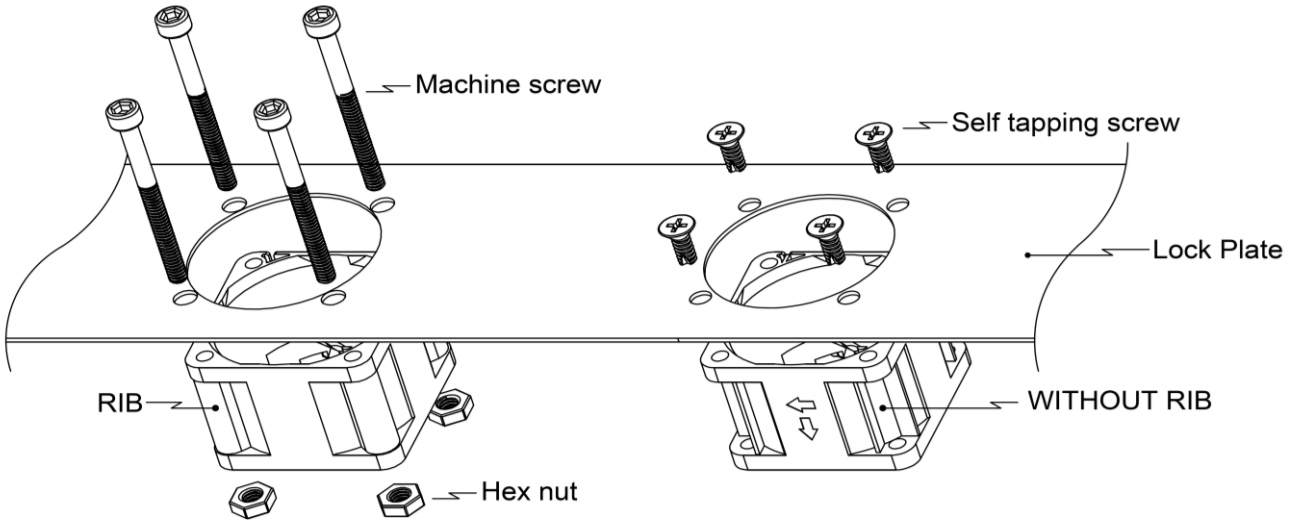

Flange Type

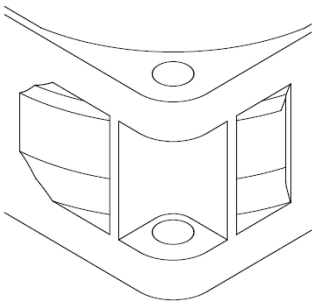

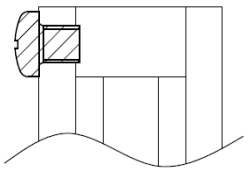

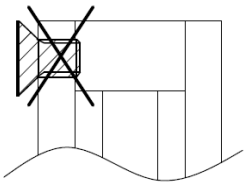

NOTE: Do not use countersunk head screws to avoid the risk of breakage.

Rib Type

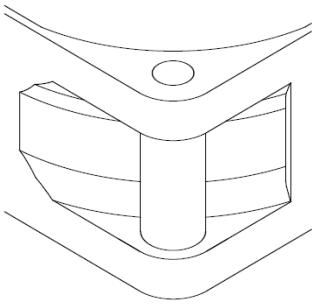

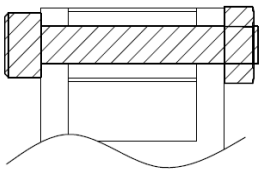

協禧電機股份有限公司 研發處 2024.07.18 發行章

Screw Type	Screw SPEC.			Recommended Hole Diameter	Frame MAX.Torque (Kgf-cm)	
	Size	Standard	Screw Diameter (Max./Min.)		Flange Type	Rib Type
Self-tapping Screws	M4	JIS B1122 (Class 2)	Ø4 / Ø3.85	ø3.2~3.5	5	8
	M5		Ø5 / Ø4.85	ø4.2~4.5	8	11

NOTE: The above-mentioned is ADDA's recommendation to use self-tapping screws, frames and locking torques. If you have any requirement, please contact ADDA.

CERTIFICATE OF COMPLIANCE

Certificate Number	E132139
Report Reference	E132139-20070713
Issue Date	2020-APRIL-18

協禧電機股份有限公司 研發處 2024.07.18 發行章

Issued to:	ADDA CORP NO 6 E SECTION INDUSTRY 6 RD PING TUNG 900 TAIWAN
This certificate confirms that representative samples of	COMPONENT - FANS, ELECTRIC Low Voltage Component Fans, Models AD0712(E)B-D9(Z), AD0812(X)(Y)-D9(Z)GP and AD0812XB-D9(V)GP series, where (E) may be H, M, L or D; (X) may be U, H, M or L; (Y) may be B, S or X; (Z) may be 1, 2 or 3; (V) may be 2 or 3. Have been investigated by UL in accordance with the component requirements in the Standard(s) indicated on this Certificate. UL Recognized components are incomplete in certain constructional features or restricted in performance capabilities and are intended for installation in complete equipment submitted for investigation to UL LLC.
Standard(s) for Safety:	UL 507 - Electric Fans CSA C22.2 No. 113-M1984 - Fans and Ventilators
Additional Information:	See the UL Online Certifications Directory at https://iq.ulprospector.com for additional information.

This *Certificate of Compliance* does not provide authorization to apply the UL Recognized Component Mark. Only the UL Follow-Up Services Procedure provides authorization to apply the UL Mark.

Only those products bearing the UL Recognized Component Mark should be considered as being UL Certified and covered under UL's Follow-Up Services.

Look for the UL Recognized Component Mark on the product.

Bruce Mahrenholz, Director North American Certification Program

UL LLC

Any information and documentation involving UL Mark services are provided on behalf of UL LLC (UL) or any authorized licensee of UL. For questions, please contact a local UL Customer Service Representative at http://ul.com/aboutul/locations/

Zertifikat *Certificate*

TÜV

Zertifikat Nr. *Certificate No.*
R 50068602

Blatt *Page*
0056

Ihr Zeichen *Client Reference*	**Unser Zeichen** *Our Reference*	**Ausstellungsdatum**	*Date of Issue (day/mo/yr)*
12049197	ZTW2-HCY- 11005418 045	17.07.2007	

Genehmigungsinhaber *License Holder*
Adda Corporation
6, East Section, Industry 6 Road
Pingtung City 900
Taiwan, R.O.C.

Fertigungsstätte *Manufacturing Plant*
Adda Corporation
6, East Section, Industry 6 Road
Pingtung City 900
Taiwan, R.O.C.

Prüfzeichen *Test Mark*

TÜV Rheinland Product Safety | BAUART GEPRÜFT | TYPE APPROVED

Geprüft nach *Tested acc. to*
EN 60950-1:2001+A11

Zertifiziertes Produkt (Geräteidentifikation)
Certified Product *(Product Identification)*

Lizenzentgelte - Einheit
License Fee - Unit

Ventilator (DC Fan)

Wie Blatt (As Page) 01
Ergänzung (Addition)

Bezeichnung (Type Designation)	: a) AD0712Y1B-D9Y2	1
	b) AD0812XB-D92GP	1
	c) AD0812XB-D93GP	1
	d) AD0812Z1Z2-D9Z3GP	1
Y1 steht für (stands for)	: H, M, L oder (or) D	1
Y2 steht für (stands for)	: 1, 2 oder (or) 3	1
Z1 steht für (stands for)	: U, H, M oder (or) L	1
Z2 steht für (stands for)	: B, S oder (or) X	1
Z3 steht für (stands for)	: 1, 2 oder (or) 3	1

Fortsetzung auf Blatt (Continued on Page) 57

協禧電機股份有限公司 研發處 2024.07.18 發行章

TÜV Rheinland Product Safety GmbH TÜV Rheinland Zertifizierungsstelle BS

ANLAGE (Appendix): 1.42

Dem Zertifikat liegt unsere Prüf- und Zertifizierungsordnung zugrunde.
Das Produkt entspricht den o.g. Anforderungen, die Herstellung wird überwacht.
This certificate is based on our Testing and Certification Regulation. The product fulfills above mentioned requirements, the production is subject to surveillance.

Zertifizierungsstelle

TÜV Rheinland Product Safety GmbH, Am Grauen Stein, D-51105 Köln
Tel.: (+49/221)8 06 - 13 71 e-mail: cert-validity@de.tuv.com
Fax: (+49/221)8 06 - 39 35 http://www.tuv.com/safety

Dipl.-Ing. B. Scheirer

Zertifikat *Certificate*

TÜVRheinland®

Zertifikat Nr. *Certificate No.*
R 50068602

Blatt *Page*
0117

Ihr Zeichen *Client Reference*	**Unser Zeichen** *Our Reference*	**Ausstellungsdatum**	*Date of Issue* (day/mo/yr)
12086425/ST	ZTW1-YML- 11005418 099	13.04.2016	

Genehmigungsinhaber *License Holder*
Adda Corporation
6, East Section, Industry 6 Road
Pingtung City 900
Taiwan, R.O.C.

Fertigungsstätte *Manufacturing Plant*
ADDA Electric Machinery Technology
(Kunshan), Co., Ltd.
No. 88, Jiangfeng Road
Zhangpu Town
Kunshan City, Jiangsu Province
P.R. China

Prüfzeichen *Test Mark*

TÜVRheinland ZERTIFIZIERT
Bauart geprüft
Sicherheit
Regelmäßige Produktions-überwachung
www.tuv.com
ID 2000000000

Geprüft nach *Tested acc. to*
EN 60950-1:2006+A11+A1+A12+A2

Zertifiziertes Produkt (Geräteidentifikation)
Certified Product ***(Product Identification)***

Lizenzentgelte - Einheit
License Fee - Unit

Ventilator (DC Fan)

wie Blatt (as page) 01

Änderung
(Change)

Prüfgrundlage : siehe oben
(Test Requirement) (see above)

協禧電機股份有限公司 研發處 2024.07.18 發行章

ANLAGE (Appendix): 1 - 1.79

Dem Zertifikat liegt unsere Prüf- und Zertifizierungsordnung zugrunde und es bestätigt die Konformität des Produktes mit den oben genannten Standards und Prüfgrundlagen. Zusätzliche Anforderungen in Ländern, in denen das Produkt in Verkehr gebracht werden soll, müssen zusätzlich betrachtet werden. Die Herstellung des zertifizierten Produktes wird überwacht.
This certificate is based on our Testing and Certification Regulation and states the conformity of the product with the standards and testing requirements as indicated above. Any additional requirements in countries where the product is going to be marketed have to be considered additionally. The manufacturing of the certified product is subject to surveillance.

Zertifizierungsstelle

TÜV Rheinland LGA Products GmbH TÜVRheinland Zertifizierungsstelle

Dipl.-Ing. (FH) A. Klinker

TÜV Rheinland LGA Products GmbH - Tillystraße 2 - 90431 Nürnberg
Tel.: (+49/221)8 06 - 13 71 e-mail: cert-validity@de.tuv.com
Fax: (+49/221)8 06 - 39 35 http://www.tuv.com/safety

10/2020 e 04.08 ® TÜV, TÜEV and TÜV are registered trademarks. Utilisation and application requires prior approval.

Zertifikat *Certificate*

TÜVRheinland®

Zertifikat Nr. *Certificate No.*	Blatt *Page*
R 50068602	0119

Ihr Zeichen *Client Reference*	Unser Zeichen *Our Reference*	Ausstellungsdatum	*Date of Issue (day/mo/yr)*
238014414	ZTW1-YML- 11005418 102	07.09.2020	

Genehmigungsinhaber *License Holder*
Adda Corporation
6, East Section, Industry 6 Road,
Pingtung City 900
Taiwan, R.O.C.

Fertigungsstätte *Manufacturing Plant*
ADDA Electric Machinery Technology
(Kunshan), Co., Ltd.
No. 88, Jiangfeng Road
Zhangpu Town
Kunshan City
Jiangsu
P.R. China

Prüfzeichen *Test Mark*

TÜVRheinland ZERTIFIZIERT
Bauart geprüft
Sicherheit
Regelmäßige Produktions-überwachung
www.tuv.com
ID 2000000000

Geprüft nach *Tested acc. to*
EN 62368-1:2014+A11

Zertifiziertes Produkt (Geräteidentifikation) *Certified Product (Product Identification)*	Lizenzentgelte - Einheit *License Fee - Unit*

Ventilator (DC Fan)

wie Blatt (as page) 01

Änderung
(Change)

Prüfgrundlage : siehe oben
(Test Requirement) (see above)

Vermerke: Dieses Netzgerät ist auch geprüft und Klassifizieret als MS3 in Tabelle 35 von Abschnitt 8.2.1 in Standards EN 62368-1:2014. Wenn nicht anders angegeben, anders angegeben, liegen die klassifizierten Bedingungen unter der Nennspannung und der normalen Drehzahl des Lüfterblatts(Remark: The equipment is also classified as MS3 according to Table 35 of sub-clause 8.2.1 in standard EN 62368-1:2014.Unless otherwise stated the classified conditions are under rated voltage and normal rotational speed of the fan blade.)

協禧電機股份有限公司 研發處 2024.07.18 發行章

ANLAGE (Appendix): 1-1.79

Dem Zertifikat liegt unsere Prüf- und Zertifizierungsordnung zugrunde und es bestätigt die Konformität des Produktes mit den oben genannten Standards und Prüfgrundlagen. Zusätzliche Anforderungen in Ländern, in denen das Produkt in Verkehr gebracht werden soll, müssen zusätzlich betrachtet werden. Die Herstellung des zertifizierten Produktes wird überwacht.
This certificate is based on our Testing and Certification Regulation and states the conformity of the product with the standards and testing requirements as indicated above. Any additional requirements in countries where the product is going to be marketed have to be considered additionally. The manufacturing of the certified product is subject to surveillance.

Zertifizierungsstelle

TÜV Rheinland LGA Products GmbH
TÜVRheinland®
Zertifizierungsstelle

Dipl.-Ing. (FH) A. Klinker

TÜV Rheinland LGA Products GmbH - Tillystraße 2 - 90431 Nürnberg
Tel.: (+49/221)8 06 - 13 71 e-mail: cert-validity@de.tuv.com
Fax: (+49/221)8 06 - 39 35 http://www.tuv.com/safety

TÜV, TÜV's and TÜV are registered trademarks. Utilisation and application requires prior approval.