

設計驗證
工程課
2024-07-05
發行
鈺創科技開發股份有限公司













JAWSS TECH

# 承　認　書

# SPECIFICATION　FOR　APPROVAL

貴 公 司 鈺緯

CUSTOMER

產品名稱 USB A+LOCK TYPE 4PIN CABLE

DESCRIPTION

使用機種 3KC00003946 (K1175)

YOUR MODEL NO

品名代號 19-450-E019

PART NO

發送日期 07/03/2024

SENDING DATE

| 公 司 承 認 章<br>OUR CONFIRMED SIGNET | 貴 公 司 承 認 章<br>YOUR CONFIRMED SIGNET |
| --- | --- |
| 兆鈺科技公司有限公司 | 設計驗證 工程課 2024-07-05 發行 鈺緯科技開發股份有限公司 |

# 鈺緯樣品測試報告

| 品名 | USB A+LOCK TYPE 4P | 客戶料號 | 3KC00003946 (K1175) | 生產日期 | 2024.6.14 | 檢驗日期 | 2024.6.14 |
|---|---|---|---|---|---|---|---|
| 檢驗數量 | 200PCS | 不良數量 | 0 | 檢驗結果 | OK | | |

| 檢驗內容 Inspection Content | 檢驗結果 |
|---|---|
| **A.搖擺測試:** | |
| 負重500公克,每分鐘左右搖擺各20次,檢測200次狀況:<br>(左右搖擺角度為線材 OD小於7.0為90度,OD大於7.0為60度) | |
| 外觀:<br>是否破裂 | **OK** |
| 電測1:<br>導通測試 | |
| 電測2:<br>絕緣測試 | |

Signal Cable Test Condition

| Cable Type | Conditions | | | |
|---|---|---|---|---|
| | Bending Angle (degree) | Speed (times/minutes) | Load Weight (g) | Number of times |
| Signal Cable<br>USB Cable<br>Audio Cable | 180 | 20 | 500 g | 200 times or more |

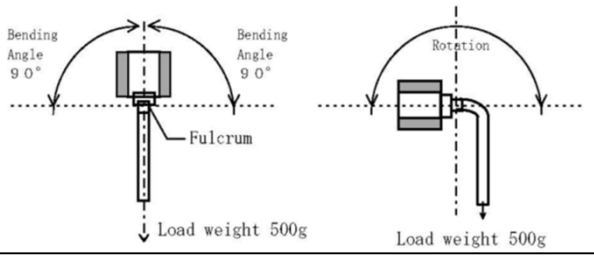


**B.尺寸檢測 Dimensions Measueing (單位:mm)**

| 圖號 | NO / spes | 1 | 2 | 3 | 4 | 5 | 檢驗結果 |
|---|---|---|---|---|---|---|---|
| A | 1500+/-15 | 1511 | 1512 | 1512 | 1511 | 1510 | **OK** |
| B | | | | | | | |
| C | | | | | | | |
| D | | | | | | | |
| E | | | | | | | |
| F | | | | | | | |
| G | | | | | | | |
| H | | | | | | | |
| I | | | | | | | |
| J | | | | | | | |
| | | | | | | | |
| | | | | | | | |

| 檢驗內容 Inspection Content | CR | MA | MI | 檢驗結果 |
|---|---|---|---|---|
| **C.電氣測試 Electric Testing** | | | | |
| 電壓 : 300 V<br>Hi-pot | ※ | | | **OK** |
| 絕緣阻抗: 20 MΩ<br>Insulstion impedance: | ※ | | | **OK** |
| 導通: 3 Ω<br>Breakover | ※ | | | **OK** |
| 焊接線位是否符合工程圖面?<br>Do the wiring diagram match the drawing? | ※ | | | **OK** |
| 直流電阻 / Ω<br>DC Resistance | ※ | | | OK |
| **D.插拔測試:** | | | | |
| 1.公母座互插是否良好<br>Do male mate female normal | ※ | | | **OK** |

**2.插拔測試:至少五百次**

| NO / 項目 | 1 | 2 | 3 | 4 | 5 |
|---|---|---|---|---|---|
| 公母對插 | 500 | 500 | 500 | 500 | 500 |
| 檢驗結果 | OK | OK | OK | OK | OK |

**E.包裝:PE袋,貼紙,綁帶之檢驗**

| | | | | |
|---|---|---|---|---|
| 1.是否符合客戶要求包裝? | | ※ | | |
| 2.貼紙尺寸日期是否正確 | | ※ | | |
| 3.綑綁方式是否正確 | | ※ | | |

**F.圖紙 Graph paper**

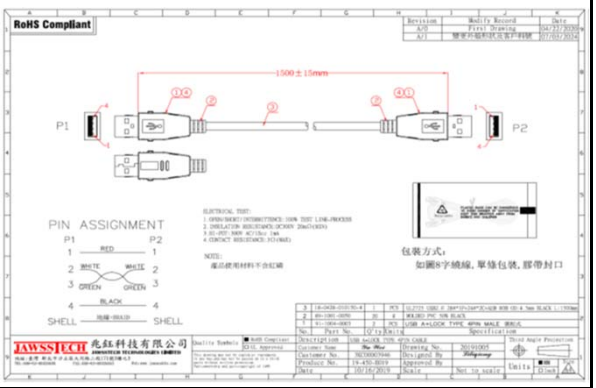


| 品質判定 QUALITY JUDGEMENT | □允許 ACCEPT □拒收 RIJECT NO._____ □特采:特采員簽名CONDITIONAL APPROVE<br>□其它 OTHER _____ | | | | |
|---|---|---|---|---|---|
| 核准 MANAGER | 魏照榮 | 審核 SUPERVISOR | | 品保 Q.C | 劉玉華 |

表單編號:TCT-2-015-03a

# 目　錄

**1.承認書封面……..……1**

**2.目錄……..……..2**

**3.成品圖面…….....3**

**4.線材……..….....4-220**

**5.插頭.....221-449**

**6.PVC 料.....450-474**

**7.公司加工的 UL 資料…… 475-477**

**RoHS Compliant**

| Revision | Modify Record | Date |
|---|---|---|
| A/0 | First Drawing | 04/22/2020 |
| A/1 | 變更外殼形狀及客戶料號 | 07/03/2024 |

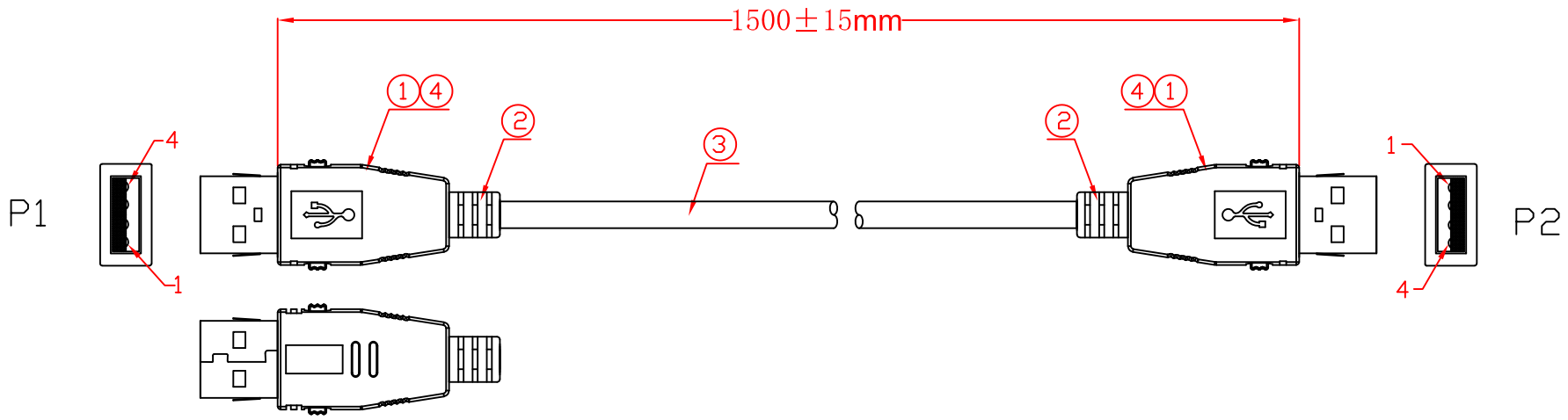


## PIN ASSIGNMENT

| P1 | | P2 |
|---|---|---|
| 1 | RED | 1 |
| 2 | WHITE | WHITE 2 |
| 3 | GREEN | GREEN 3 |
| 4 | BLACK | 4 |
| SHELL | 地線+BRAID | SHELL |

ELECTRICAL TEST:
1.OPEN/SHORT/INTERMITTENCE:100% TEST LINE-PROCESS
2.INSULATION RESISTANCE:DC300V 20mΩ(MIN)
3.HI-POT:300V AC/1Scc 1mA
4.CONTACT RESISTANCE:3Ω(MAX)

NOTE:
產品使用材料不含紅磷

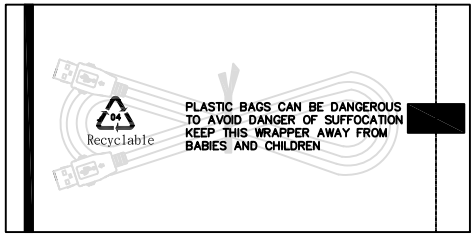


包裝方式:
如圖8字繞線, 單條包裝, 膠帶封口

設計驗證
工程課
2024-07-05
發行
鈺鑽科技開發股份有限公司

**3KC00003946 (K1175)**

| No. | Part No. | Q'ty | Units | Specification |
|---|---|---|---|---|
| 3 | 18-0428-010150-4 | 1 | PCS | UL2725 USB2.0 28#*1P+24#*2C+AEB 80B OD:4.5mm BLACK L:1500mm |
| 2 | 89-1001-0050 | 20 | g | MOLDED PVC 50% BLACK |
| 1 | 91-1004-0003 | 2 | PCS | USB A+LOCK TYPE 4PIN MALE 裝配式 |


JAWSSTECH 兆鈺科技有限公司
JAWSSTECH TECHNOLOGIES LIMITED
地址:臺灣 新北市汐止區大同路二段171號3樓之3
TEL:886-02-86926686 FAX:886-02-86926343 Web:www.jawscable.com


Quality Symbols: ■ RoHS Compliant ☐ UL Approved


This drawing may not be copied or reproduced in any way,and may not be passed on to a third party without written permission. Part-ownership and part-copyright of JAWS


| | | | |
|---|---|---|---|
| Description | USB A+LOCK TYPE 4PIN CABLE | | |
| Customer Name | Yu Wei | Drawing No. | 20191005 |
| Customer No. | 3KC00003946 | Designed By | Liliqiong |
| Produce No. | 19-450-E019 | Approved By | |
| Date | 10/16/2019 | Scale | Not to scale |

Third Angle Projection

Units ■ MM ☐ Inch Size A4

| PECIFICATION： | 1P*28AWG+2C*24AWG+AL.MYLAR+DRAIN+BRAID / UL2725 |
|---|---|

| ITEM | | SPECIFICATION | |
|---|---|---|---|
| CONDUCTOR | AMG | 28AWG | 24AWG |
| | MATERIAL | TINNED COPPER | TINNED COPPER |
| | COND.SIZE | 7/0.127±0.008MM | 7/0.20±0.008MM |
| INSULATION | MIN.AVG.THICK | 0.23MM | 0.23MM |
| | MATERIAL | HD-PE | PVC |
| | O.D | 0.90±0.05MM | 1.10±0.05MM |
| | NO. | 1P | 2C |
| Face Outside AL.MYLAR | COVERAGE | 100% | |
| | OVERLAP | 25% MIN | |
| DRAIN | MATERIAL | TINNED COPPER | |
| | SIZE | 7/0.12±0.008MM | |
| BRAID COPPER | MATERIAL | TINNED COPPER | |
| | SIZE | 16*5/0.10±0.008MM | |
| JACKET | MIN.AVG.THICK | 0.50MM | |
| | MATERIAL | PVC | |
| | COLOUR | BLACK | |
| | O.D | 4.50±0.20MM | |

**CONSTRUCTION D.W.G**

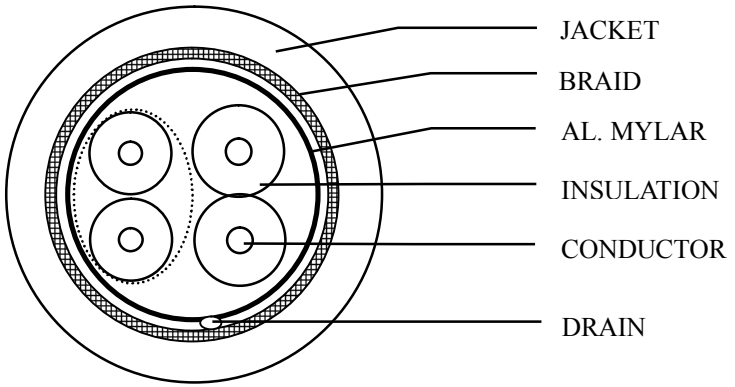


**COLOUR CODE:**

1P*28#：WHITE* GREEN

2C*24#：1.BLACK 2. RED

**MARKING**

E119932-U 兄 AWM 2725 80 ℃ 30V VW-1
LL84201 CSA AWM I/IIA 80 ℃ 30V FT1
COPARTNER USB Revision 2.0

**R E M A R K**

**ELECTRICAL CHARACTERISTICS**

1. Rating : TEMP 80 ℃ ; VOLTAGE 30 V
2. Conductor Resistance: at 20℃ MAX
   28AWG: 239Ω/km; 24AWG: 94.2Ω/km;
3. Insulation Resistance: 10MΩ/km min at 20℃ dc 500V
4. Dielectric Strength: AC 500V/1minute

**PHYSICAL PROPERTIES**

1. Flexibility test: NO CRACKING

COPARTNER

**XIN YA WIRE & CABLE (SHENZHEN) MFG CO., LTD.**

| PART NO. | | | |
|---|---|---|---|
| APPROVED | | CUSTOMER | 昌偉 |
| CHECKED | | REV | A / 0 |
| DRAWING | TANG | DATE | 2019/11/27 |

1655 Scott Blvd
Santa Clara, CA 95050-4169
(408) 985-2400
FAX No. (408) 296-3256

Underwriters Laboratories Inc.®

File E119932 Vol 2 Issued 01/04/1995
Revised 03/25/2003

FOLLOW-UP SERVICE PROCEDURE
(TYPE L)

COMPONENT - APPLIANCE WIRING MATERIAL
(AVLV2, AVLV8)

Manufacturer: SEE ADDENDUM FOR MANUFACTURING LOCATIONS

Applicant: (472158-002)
COPARTNER WIRE & CABLE MFG CORP
FAR EAST CENTURY PARK, 4TH FL
16 CHIEN PA RD
CHUNG HO CITY
TAIPEI HSIEN TAIWAN

Recognized Company: (472158-002)
SAME AS APPLICANT

This Procedure authorizes the above Manufacturer to use the marking specified by Underwriters Laboratories Inc. only on products covered by this Procedure, in accordance with the applicable Follow-Up Service Agreement.

The prescribed Mark or Marking shall be used only at the above manufacturing location on such products which comply with this Procedure and any other applicable requirements.

The Procedure contains information for the use of the above named Manufacturer and representatives of Underwriters Laboratories Inc. and is not to be used for any other purpose. It is lent to the Manufacturer with the understanding that it is not to be copied, either wholly or in part, and that it will be returned to Underwriters Laboratories Inc upon request.

This PROCEDURE, and any subsequent revisions, is the property of UNDERWRITERS LABORATORIES INC. and is not transferable.

UNDERWRITERS LABORATORIES INC.

A.W. Schaefer
Vice President and General Manager
Laboratory Management and Operations

A not-for-profit organization dedicated to public safety and committed to quality service

LOCATION

(133927-003) COPARTNER WIRE & CABLE MFG LTD
CHANG LING INDUSTRIAL AREA
XIN TIAN VILLAGE, 68 XINTANG RD
FU YONG COUNTY, BAO'AN DISTRICT
SHENZHEN GUANGDONG CHINA

(133927-004) COPARTNER WIRE & CABLE MFG LTD
19 DA YANG TIAN INDUSTRIAL ZONE
WAN FENG VILLAGE, SHA JING TOWN
BAO'AN
SHENZHEN GUANGDONG CHINA

(133927-005) COPARTNER WIRE & CABLE MFG LTD
45'DA YANG TIAN INDUSTRIAL ZONE
SHA JING TOWN
BAO'AN, WAN FENG VILLAGE
SHENZHEN GUANGDONG CHINA

TAG MARKINGS:

Tag markings are in accordance with the marking section of UL 758 and any requirements on the style page (effective July 14, 2005).

RECOGNIZED COMPANY'S IDENTIFYING MARK:

Recognized Company's name, or File "E119932" surface printed on the insulation or jacket.

Manufacturer Identification - The manufacturers listed below must be identified by using the following codes after the Recognized Company's identification as noted above (ex. "E119932-T," where "-T" is the factory identification code). If the factory is the same as the Recognized Company's, no code is required.

| Location | Factory Identification Code |
|---|---|
| (133927-003) | None |
| (133927-004) | T |
| (133927-005) | U |

# HOPERISE INDUSTRIAL LIMITED

## 制品安全數據表

### 一、物品與廠商資料

| |
|---|
| 物品名稱：**裸銅線及鍍錫線** |
| 物品編號：無資料 |
| 制造商或供應商名稱：**興揚實業有限公司**<br>地址：東莞市常平鎮橋梓村 |
| 緊急聯絡電話/傳真：TEL：0769-83334349　　FAX：0769-83332844 |

### 二、成分辨識資料

**The Copper Including：**

| Assay Certificate | Unit | Spec. | Results |
|---|---|---|---|
| Cu | % | min.99.90 | min.99.95 |
| Ag | ppm | max.25.0 | 2.64 |
| As | ppm | max.5.0 | 1.75 |
| Bi | ppm | max.1.0 | ＜0.700 |
| Fe | ppm | max.10.0 | ＜3.00 |
| Ni | ppm | max.10.0 | ＜0.40 |
| Pb | ppm | max.5.0 | ＜1.00 |
| S | ppm | max.15.0 | 2.78 |
| Se | ppm | max.2.0 | ＜0.500 |
| Sb | ppm | max.4.0 | ＜2.0 |
| Sn | ppm | max.5.0 | ＜2.0 |
| Te | ppm | max.2.0 | ＜2.0 |
| O | ppm | 100~650 | 217~378 |

**The Covering Including：**

| Assay Certificate | Unit | Analysis | Assay Certificate | Unit | Analysis |
|---|---|---|---|---|---|
| Sn | % | 99.935 | Pb | % | ＜0.00025 |
| As | % | 0.006 | Sb | % | 0.007 |
| In | % | 0.005 | Fe | % | 0.005 |
| Co | % | ＜0.001 | Ni | % | ＜0.001 |
| Bi | % | 0.002 | Cu | % | 0.005 |
| Al | % | ＜0.001 | Zn | % | ＜0.001 |
| Cd | % | ＜0.001 | S | % | ＜0.001 |

### 三、危害辨識資料

興揚實業(深圳)有限公司

| | |
|---|---|
| 最重要危害效應 | 健康危害效應：無特別危險性 |
| | 環境影響：不可隨便丟棄,無法在自然條件下分解,可生銹氧化污染環境. |
| | 物理性及化學性危害：固體,可溶于強酸後污染環境 |
| | 特殊危害：目前沒有發現有特殊危害. |
| 主要症狀：銅離子:胃疼,四肢無力.鉛離子:輕度中毒表現爲:昏睡呆痴、胃漲氣等. | |
| 物品危害分類：目前沒有分類. | |

## 四、急救措施

| |
|---|
| 不同暴露途徑之急救方法<br>・吸入：不適用<br>・皮膚接觸：無影響,及時洗手<br>・眼睛接觸：燃燒狀態下才會刺激眼睛,立即就醫<br>・食入：立即就醫 |
| 最重要症狀及危害效應：丟棄會對環境排水系統，河流，海洋造成污染・ |
| 對急救人員之防護：按正常程序處理 |
| 對醫師之提示：按正常程序處理 |

## 五、滅火措施

| |
|---|
| 適用滅火劑：二氧化碳滅火器、化學干粉滅火器 |
| 滅火時可能遭遇之特殊危害：防止吸入氣體和煙霧 |
| 特殊滅火程序：消防人員應配防高溫服，選用滅火齊滅火・ |
| 消防人員之特殊防護設備：呼吸保護罩、護眼罩 |

## 六、泄漏處理方法

| |
|---|
| 個人應注意事項：不適用 |
| 環境注意事項：不可焚化處理，不可隨意丟棄，應通知環保人員處理 |
| 清理方法：回收再處理 |

## 七、安全處理與儲存方法

| |
|---|
| 處置：按正常加工程序處理 |
| 儲存：a.儲存條件：溫度 25±5℃，相對濕度 50±30%RH。<br>b.注意防潮通風，避免因濕度累積導致產品氧化。<br>c.避免與酸或鹼性物品共同儲存。<br>d.未使用完部份請及時密封，按儲存條件保存。 |

## 八、暴露預防措施

| |
|---|
| 工程控制：常溫下使用時無特別要求 |
| 控制參數：<br>・八小時日時量平均容許濃度/短時間時量平均容許濃度/最高容許濃度：無資料<br>・生物指標：無資料 |
| 個人防護設備<br>・呼吸設備：常溫下，無特別要求<br>・手部防護：手套作業<br>・眼睛防護：常溫下，無特別要求<br>・皮膚及身體防護：常溫下，無特別要求 |
| 衛生措施：工作后洗手 |

## 九、物理及化學性質

| | |
|---|---|
| 物質狀態：固體 | 形狀：N/A |
| 顏色：N/A | 氣味：無味 |
| PH 值：N/A | 沸點/沸點范圍：未測定 |
| 分解溫度：1083℃ | 閃火點：N/A ℉ N/A ℃<br>測試方法：N/A 開杯 N/A 閉杯 |
| 自然溫度：難燃 | 爆炸界限：N/A |
| 蒸氣壓：N/A | 蒸氣密度：N/A |
| 密度：8.89g/cm$^3$ | 溶解度：不溶于水 |

## 十、安定性及反應性

| |
|---|
| 安定性：長期置于空氣中氧化 |
| 特殊狀況下可能之危害反應：高溫下焚化可能會產生灼熱的光 |
| 應避免之狀況：避免高溫焚化 |
| 應避免之物質：避免同酸鹼性物質共處 |
| 危害分解物：在強酸溶解的狀態下，有害物質才會分解． |

## 十一、毒性資料

| |
|---|
| 急毒性：無 |
| 局部效應：無 |
| 致敏感性：無 |
| 慢毒性或長期毒性：無 |
| 特殊效應：高溫焚燒可能產生灼熱的光 |

## 十二、生態資料

| |
|---|
| 可能之環境影響：1．隨便丟棄會對環境造成污染 2。遇強酸強鹼可發生氧化分解 |

## 十三、廢棄處置方法

| |
|---|
| 廢棄處置方法：遵守排放廢棄物及有關廢棄物處理的法律以及當地廢棄物處理之規定處理。 |

## 十四、運送資料

| |
|---|
| 國際運送規定：避免同酸或鹼性物質一同運輸 |
| 聯合國編號：無資料 |
| 國內運輸規定：無資料 |
| 特殊運送方法及注意事項：防止包裝破損 |

## 十五、法規資料

| |
|---|
| 適用法規：無資料 |

## 十六、其他資料

| | | |
|---|---|---|
| 參考文獻 | 此記載內容是根據現有資料作成，并不能保証資料之完整性、正確性，必須隨時改正。 | |
| 制表單位 | 名稱：**興揚實業有限公司** | |
| | 地址：**東莞市常平鎮橋梓村**<br>電話：0769-83334349 | |
| 制表人 | 職稱：品管課長 | 姓名(簽章)：**張　俊** |
| 制表日期 | 2009 年 04 月 01 日 | |



# 物質安全資料表參考格式

一、物品與廠商資料

| |
|---|
| 物品名稱： 透明麦拉带 |
| 物品編號： PET |
| 製造商或供應商名稱、地址及電話：<br>供應賞名稱：铸宝电讯材料（深圳）有限公司<br>地址：深圳市宝安区松岗镇洪桥头村恒兆工业区三栋<br>TEL：86-0755-27058629/30 |
| 緊急聯絡電話/傳真電話：TEL：86-0755-27058629<br>FAX：86-0755-27058631 |

二、成分辨識資料

純物質：

| |
|---|
| 中英文名稱： 透明麦拉带 |
| 同義名稱： PET |
| 化學文摘社登記號碼(CAS No.)：25038-59-9 |
| 危害物質成分(成分百分比) ： / |

混合物： PET

| 化學性質：固態 | | |
|---|---|---|
| 危害物質成分之中英文名稱 | 濃度或濃度範圍(成分百分比) | 危害物質分類及圖式 |
| 麦拉（PET） | 100% | / |
| | | |
| | | |

三、危害辨識資料

| | |
|---|---|
| 最重要危害效應 | 健康危害效應：无影响 |
| | 環境影響：燃烧时時產生的煙霧對空氣造成的污染. |
| | 物理性及化學性危害：加熱、衝擊、火花、明火條件下一般不會產生爆炸 |
| | 特殊危害：無 |
| 主要症狀：燙傷 | |
| 物品危害分類： Cd<5ppm,Pb<50ppm,Hg<2ppm,Cr+6<2ppm,PBB<5ppm ,PBDE<5ppm | |

四、急救措施

| |
|---|
| 不同暴露途徑之急救方法：<br>• 吸入：立即就醫<br>• 皮膚接觸：不受影响<br>• 眼睛接觸：不可接触<br>• 食入：立即就醫 |
| 最重要症狀及危害效應：无影响 |
| 對急救人員之防護：一般防护措施 |
| 對醫師之提示： 吞食时，立即送入医院 |

五、滅火措施

| |
|---|
| 適用滅火劑：化学干粉灭火器、二氧化碳等灭火器 |
| 滅火時可能遭遇之特殊危害：燙傷及吸入煙霧 |
| 特殊滅火程序： 无特殊要求 |
| 消防人員之特殊防護設備： 一般防护措施 |

六、洩漏處理方法

| |
|---|
| 個人應注意事項：不存在泄漏现象 |
| 環境注意事項：无影响 |
| 清理方法：不适用 |

七、安全處置與儲存方法

| |
|---|
| 處置：<br>1. 在通风良好的指定的区域环境内；2.远离火花、火源，工作区张贴禁烟标识；<br>3. 备置随时可用的紧急的应变装备； |
| 儲存：<br>1. 使用牛皮纸或纸箱封裝,儲存干燥且通风處,遠離熱、火焰及引火源,不可混合強酸、强碱、不可光照、雨淋,與酸性介質接觸或儲存環境濕度过高將使表面氧化发黑。<br>2. 貯存区应备即可用之灭火器材并置于温度在（20~30℃），相对湿度为（20~80%RH）通风干燥环境中； |

八、暴露預防措施

| |
|---|
| 工程控制： 一般通风环境系统。 |
| 控制參數：<br>• 八小時日時量平均容許濃度/短時間時量平均容許濃度/最高容許濃度：无<br>• 生物指標： 无 |
| 個人防護設備：<br>• 呼吸防護：无要求<br>• 手部防護：无要求<br>• 眼睛防護：不可接触，不需面罩和安全护目镜。<br>• 皮膚及身體防護：身體穿著工作服; |
| 衛生措施：1.工作场所严禁抽烟或饮食； 2.维持作业场所清洁 |

九、物理及化學性質

| | |
|---|---|
| 物質狀態：固體 | 形狀：带状 |
| 顏色：透明或黑色 | 氣味：無气味 |
| pH 值： / | 沸點/沸點範圍： N/A |
| 分解溫度：N/A | 閃火點： N/A<br>測試方法： N/A |
| 自燃溫度：不燃 | 爆炸界限：不會爆炸 |
| 蒸氣壓：不適用 | 蒸氣密度：無 |
| 密度：约为 1.3-1.38 | 溶解度：不溶 |

十、安定性及反應性

| |
|---|
| 安定性：安定 |
| 特殊狀況下可能之危害反應：可燃性 |
| 應避免之狀況：遠離熱、火焰及引火源 |
| 應避免之物質：強酸、強氧化性介質、强光、水等 |
| 危害分解物：二氧化碳、黑烟 |

十一、毒性資料

| |
|---|
| 急毒性： 无 |
| 局部效應： 无 |
| 致敏感性： 无相关报告 |
| 慢毒性或長期毒性：无相关报告 |
| 特殊效應：无相关报告 |

十二、生態資料

| |
|---|
| 可能之環境影響/環境流佈：无影响 |

十三、廢棄處置方法

| |
|---|
| 廢棄處置方法：<br>回收回炉 |

十四、運送資料

| |
|---|
| 國際運送規定：<br>一般车辆运送。 |
| 聯合國編號： 不需要 |
| 國內運送規定： 牛皮纸或纸箱包装后，一般车辆运送。 |
| 特殊運送方法及注意事項： 无特殊要求。 |

十五、法規資料

| |
|---|
| 適用法規：<br>欧盟指令 ROHS；SONY 之 SS-00259 之要求。 |

十六、其他資料

| | | |
|---|---|---|
| 參考文獻 | ATSM D882A 等 | |
| 製表單位 | 名稱： 铸宝电讯材料（深圳）有限公司<br>地址/電話：<br>地址：深圳市宝安区松岗镇洪桥头村兆福达工业区三栋<br>TEL：0755-27058629/30 | |
| 製 表 人 | 職稱： 组长 | 姓名(簽章)： 蒲桂科 |
| 製表日期 | 2009-7-17 | |

上述資料由铸宝公司参考國內外文獻及製造廠商之資料制订而成，不全和错误唯恐难免，各項數據與資料僅供参考，使用者请依应用需求，自行负责判其可用性。

# MATERIAL SAFETY DATA SHEET

*Issue date :18/09/2008

## SECTION 1. MATERIAL IDENTIFICATION

### TRADENAMES AND SYNONYMS

PET

**IDENTIFICATION OF THE SUPPLIER**

**SUPPLIED BY:** Outstanding Tele-communications Material ShenZhen Co.,LTD

**PHONE NUMBERS**

**PRODUCT INFORMATION : 86-755-27058629 / 27058630**

**EMERGENCY : 86-755-27058629**

## SECTION 2. COMPOSITION/INFORMATION ON INGREDIENTS

**Componets**

| Material | CAS Number | % |
|---|---|---|
| POLYETHYLENE TEREPHTHALATE | 25038 - 59 - 9 | >99 |
| ADDITIVES | | <1 |

**Components(remarks)**

**All ingredients comprising this resin are bound in a thermoplastics polymer. These substances do not present a respiration hazard unless the polymer is ground to a powder of respirable size and the dust is inhaled. All dusts are potentially injurious to the respiratory tract if respirable particles are generated and inhaled in sufficiently high concentrations. Good industrial hygiene practices, as with all dusts, should include precautions to prevent inhalation of respirable particles.**

**Material is not known to contain toxic chemical.**

## SECTION 3. HAZARDS IDENTIFICATION

**Potential Health Effects**

**POLYETHYLENE TEREPHTHALATE**

Eye contact with Polyethylene Terephthalate particles may cause mechanical irritation with discomfort, tearing, or blurring of vision.

Decomposition products caused by overheating Polyethylene terephthalate may cause skin, eye or

respiratory tract irritation.

Carcinogenicity Information

None components are listed by IARC, NTP, OSHA or AGGIH as carcinogens.

## SECTION 4. FIRST AID MEASURES

**First aid**

**INHALATION**

No specific intervention is indicated as the compound is not likely to be hazardous by inhalation.Consult a physician if necessary.

If exposed to fumes overheating or combustion, remove to fresh air. Consult a physician if symptoms persist.

**SKIN CONTACT**

The compound is not likely to be hazardous by skin contact but cleaning the skin after use is advisable.

If molten material gets on skin, cool rapidly with cold water. Do not attempt to remove material from skin. Obtain medical treatment for thermal burn.

**EYE CONTACT**

In case of contact, immediately flush eyes with plenty of water for at least 15 minutes. Call a physician.

**INGESTION**

No specific intervention is indicated as compound is not likely to be hazardous by ingestion. Consult a physician if necessary.

## SECTION 5. FIRE FIGHTING MEASURES

**Flammable Properties**

Flash Point : Not applicable

Fire and Explosion Hazards:

Combustible. hazardous gases/vapors produced in fire are carbon monoxide.

**Extinguishing Media**

Water, foam, dry chemical,CO2

**Fire Fighting Instructions**

Keep personnel removed and upwind of fire. Wear self-contained breathing apparatus.

## SECTION 6. ACCIDENTAL RELEASE MEASURES

**Safeguards (Personnel)**

Pellets lie scattered on the passage or floor, you may slip and stumble. Clean the passage or floor immediately.

NOTES: Review FIRE FIGHTING MEASURES and HANDLING (PERSONNEL) Sections before proceeding with clean-up. Use appropriate PERSONAL PROTECTIVE EQUIPMENT during clean-up.

## SECTION 7. STORAGE

**Handling (Personnel)**

See FIRST AID AND PERSONAL PROTECTIVE EQUIPMENT SECTIONS.

**Storage**

**Store in a cool, dry place. Keep containers tightly closed to prevent moisture absorption and contamination.**

## SECTION 8. EXPOSURE CONTROLS/PERSONAL PROTECTION

**Engineering Controls**

Ventilation Use local exhaust ventilation to keep the concentration of vapore and fumes generated during the hot processing of this material,below exposure limits.

Use local exhaust to control the concentrations of dust generated in cutting or grinding operations ,below exposure levels.

**Personal Protective Equipment**

EYE Safety glasses are recommended.

SKIN Protective gloves when polymer is hot. Also long sleeve cotton skirt and long pants if handling molten polymer.

RESPIRATOR not required for normal processing. During grinding, sanding, or sawing operations use a respirator if ventilation is inadequate to maintain particulate concentrations below permissible levels.

**Exposure limits**

PET resins all in CRA005

PEL （OSHA） : Particulates（Not otherwise regulated）
15mg/m3,8hr.TWA,total dust
5mg/m3,8hr.TWA,respirable dust

## SECTION 9. PHYSICAL AND CHEMICAL PROPERTIES

**Physical Data**

| | | |
|---|---|---|
| Melting Point | : | 240-260℃ |
| %Volatiles | : | NA |
| Solubility in water | : | Insoluble |
| Odor | : | None |
| Form | : | Pellets |
| Specific Gravity | : | 1.38-1.39 |

## SECTION 10. STABILITY AND REACTIVITY

**Chemical Stability**

Stable at normal temperatures and storage conditions.

**Conditions to Avoid**

Temperature above 300℃. Abnormally long processing time or high temperatures can produce irritating and toxic fumes.

**Incompatibility with other materials**

Incompatible or can react with oxidizing agents.

**Decomposition**

Hazardous gases or vapors can be released, including carbon monoxide, aldehydes etc.

## SECTION 11. ECOLOGICAL INFORMATION

**Animal Data**

**Polyethylene Terephthalate**

Rats exposed to combustion products exhibited signs of carbon monoxide intoxication.

No animal data are available to define the carcinogenicity, developmental, reproductive or mutagenic hazards of Polyethylene terephthalate.

## SECTION 11. ECOLOGICAL INFORMATION

No information is available.toxicity is expected to be low based on insolubility in water.

## SECTION 12. DISPOSAL CONSIDERATIONS

Waste Disposal

Preferred options for disposal are (1) recycling,(2) incineration with energy recovery, and (3)landfill. The high fuel value of this product makes option 2 very desirable for material that cannot be recycled. Treatment ,storage,transportation,and disposal must be in accordance with local regulations.

## SECTION 13. TRANSPORTATION INFORMATION

**Shipping information:**

Not regulatd

## SECTION 14. REGULATORY INFORMATION

No substances on the hazardous substances list.

## SECTION 15. OTHER INFORMATION

The data in this MATERIAL SAFETY DATA SHEET only to the specific material designed herein and doe not related to use with combination with other material or in any process.

This information is based on technical believed to be reliable. It is subject to revision as additional knowledge and experience is gained.


| | |
|---|---|
| Responsibility to MSDS: | QA. Dept. |
| Address: | SHENZHEN .GUANGDOGN .CHINA |
| Telephone: | +86-755-27058629 |
| Fax: | +86-755-27058631 |

# 东莞市鸿鑫鋁箔有限公司

## 物質安全資料表(MSDS)

一、物品與廠商資料

| |
|---|
| 物品名稱:鋁箔麥拉 |
| 物品編號:暫無 |
| 製造商或供供應商名稱、位址及電話：佛山市宏凱鋁箔有限公司 |
| 緊急聯絡電話/傳真電話 0769-81062890 83101325 0757-86518199FAX：0769-81062891 |

二、成分辯認資料

純物質：

中英文名稱：鋁箔麥拉

同義名稱：鋁箔

化學文摘社登記號編（CAS NO）

| Part Name | No. | Substance Name | CAS No. | EINECS No. | Content Rate(%) per homogeneous materials) | Chemical composition of material weight percentage of total |
|---|---|---|---|---|---|---|
| 純鋁 | 1 | Cu | 7440-50-8 | 231-159-6 | 0.0500% | 45% |
| | 2 | Si + Fe | 7440-21-3 | 231-130-8 | 0.5200% | |
| | | | 7439-89-6 | 231-096-4 | | |
| | 3 | Mn | 7439-95-4 | 231-104-6 | 0.0500% | |
| | 4 | Zn | 7440-66-6 | 231-175-3 | 0.0500% | |
| | 5 | Al | 7429-90-5 | 231-072-3 | 99.3000% | |
| | 6 | 其他雜質 | NA | NA | 0.0300% | |
| 接著主劑 | 7 | 乙二醇 | 107-21-1 | 603-027-00-1 | 0.9000% | 3% |
| | 8 | 二甘醇 | 111-46-6 | 203-872-2 | 5.0000% | |
| | 9 | 已二酸 | 124-04-9 | 607-144-00-9 | 28.5000% | |
| | 10 | MDI | 101-68-8 | 615-005-00-9 | 14.5000% | |
| | 11 | 醋酸乙酯 | 141-78-6 | 607-022-00-5 | 51.1000% | |
| 固化劑 | 12 | MDI | 101-68-8 | 615-005-00-9 | 35.5000% | 3% |
| | 13 | 醋酸乙酯 | 141-78-6 | 607-022-00-5 | 49.0000% | |
| | 14 | 三羥甲基丙烷 | 77-99-6 | NA | 15.5000% | |

危害物質成分（成分百分比）：見測驗報告

混合物：

化學物質：

| 危害物質成分之中方名稱： | 濃度或濃度範圍（成分百分比）： | 危害物質分類圖式：無 |
|---|---|---|
| Cd | ND<2PPM | |
| Pb | ND<2PPM | |
| Hg | ND<2PPM | |
| CrVI | ND<2PPM | |
| PBBS | ND<5PPM | |
| PBDES | ND<5PPM | |
| 16P | ND | |
| PAHS | ND<0.2PPM | |
| PFOA&PFOS | ND<10PPM | |
| Halogen | ND<50PPM | |
| TBBPA | ND<10PPM | |
| Nonylphenol | ND<10PPM | |
| Bisphenol A | ND<1PPM | |

| | | |
|---|---|---|
| DMF | ND<0.1PPM | |
| REACH | ND | |

三、危害辯識資料

| | |
|---|---|
| 最重要危害效應 | 健康危害效應： |
| | 無環境影響：無 |
| | 物理性及化學性危害：常態下物理及化學性質穩定 |
| | 特殊危害：無 |
| 主要症狀：無 | |
| 物品危害分類：無 | |

四、急救措施

| |
|---|
| 不同暴露途徑之急救方法：<br>●吸入：吸入情況不可能發生<br>●皮膚接觸：無明顯反應<br>●眼睛接觸：無明顯反應<br>●食入：此產品不能食入 |
| 最重要症狀及危害效應：無 |
| 對急救人員之防護：無特殊要求 |
| 對醫師之提示；使用後清水洗手即可 |

五、滅火措施

| |
|---|
| 適用滅火劑：水 泡沫 乾粉 CO2 |
| 滅火時可能遇到之特殊危害：無特殊危害 |
| 特殊滅火程式：用水 泡沫 乾粉 CO2 噴灑 |

六、洩漏處理方法

| |
|---|
| 個人應注意事項：盡可能用手套以防被刮傷皮膚 |
| 環境注意事項：對環境無污染 |
| 清理方法：掃起置於容器之內 |

七、安全處置與儲存方法

| |
|---|
| 處置：最適宜的溫度爲室內溫狀態下。PH 值爲中性 |
| 儲存：堆放時不宜過高以免跌落損傷人或物，避免陽光直射 |

、八、暴露預防措施

| |
|---|
| 工程控制：通風設備 A 局部通風設備 B 整體換氣裝置 |
| 控制參數： |
| ● 八小時日量平均容許濃度/短時間量平均容許濃度/最高溶許濃度<br>● 生物指標：無 |
| 個人防護設備<br>●呼吸防護：無特殊要求<br>●手部防護：手套<br>●眼睛防護：無特殊要求<br>●皮膚及身體防護：無特殊要求 |
| 衛生措施：作業完成後洗手，保持作業環境乾淨整潔 |

九、物理及化學性質

| | |
|---|---|
| 物質狀態：固體 | 形狀：卷材 |
| 顏色：金黃色 | 氣味：無味 |
| PH 值：中性 | 閃火點： |
| 自燃溫度：無 | 爆炸界限：無 |
| 蒸氣壓：無 | 蒸氣密度：無 |
| 密芠：大於 1 | 溶解度：常態下不溶于水 |

十、安定性及反應性

| |
|---|
| 安定性：穩定 |
| 特殊狀況下可之危害反應 |
| 應避免之狀況：無特殊狀況 |
| 應避免之物質：無特殊要求 |
| 危害分解物：無 |

十一、毒性資料

| |
|---|
| 急毒性：無 |
| 局部效應：無 |

| |
|---|
| 致敏效應：無 |
| 慢毒性或長期毒性：無 |
| 特殊效應：無 |

十二、生態資料

| |
|---|
| 可能之環境影響/環境流布：對環境不會造成污染 |

十三、廢棄處置方法

| |
|---|
| 廢棄蓰置方法：回體回收或依當地法規處理 |

十四、運送資料

| |
|---|
| 國際運送規定：無 |
| 聯合國編號：無 |
| 國內運送規定：無 |
| 特殊運送方法及注意事項：防曬 防損 |

十五、法規資料

| |
|---|
| 適用法規：安全生產法 固體廢物污染防治學或依當地法規 |

十六、其他資料

| | | |
|---|---|---|
| 參考文獻：無 | | |
| 備註: 符合 Reach 1 /2/3 級物質的要求 | | |
| 製表單位 | 名稱：东莞市鸿鑫鋁箔有限公司 | |
| | 位址/電話：東莞市大朗鎮水平村荔華西路 178 號 TEL0769-81062890 | |
| 製錶人 | 職稱：品管 | 姓名（簽章）麥福林 |
| 製錶日期 | 2012-01-01 | |

# 物质安全数据表（MSDS）

## 一、制造商或供应商之资料

| |
|---|
| 产品名称：PVC 电线电缆印字黑色油墨（INK BLACK FOR PVC WIRE&CABLE PRINTING） |
| 同义名称：PVC 电线电缆印字黑色油墨 |
| 产品材质：环保材质 |
| 制造厂商：东莞市虎门信华精密雕刻厂 |
| 厂商地址：东莞市虎门镇村头大岗山工业区 |
| 咨询者联络电话：0769－85151689　　传真号码：0769－85151889 |

## 二、成份识别资料

物品名称（中英文）：PVC 电线电缆印字黑色油墨（INK BLACK FOR PVC WIRE&CABLE PRINTING）

同义名称：PVC 电线电缆印字黑色油墨

健康危害：无毒无害　易燃性：可燃性　反应性：无　图示种类：

| 成份识别材料 | | | | | |
|---|---|---|---|---|---|
| 名称 | 分子式 | 含量 | CAS.NO. | 分子量 | 外观与性状 |
| 色粉（碳黑） | C | 约 9% | 1333-86-4 | 12.011 | 纯黑色的细粒或粉状物。 |
| 合成树脂 | C6H1404・W99 | 约 45% | 68648-53-3 | | 无色或淡黄色液体。 |
| 异佛尔酮 | C9H140 | 约 32% | 78-59-1 | 138.21 | 无色低挥发性液体. |
| 丁酯 | C5H1002 | 约 14% | 592-84-7 | 102.13 | 无色液体，有香味。 |

## 三、健康危害及急救措施

| | |
|---|---|
| 急性危害 | 眼睛：不可直接接触，直接碰触会造成红肿、轻微发痒 |
| | 皮肤：直接接触，不会侵触皮肤，微有刺痛感 |
| | 吞食：不可吞食，若吞食会造成急性中毒，呕吐不适症状 |
| | 吸入：大量吸入造成头晕 |

| | |
|---|---|
| 慢 性 危害 | 会导致神经系统、心血管系统慢性中毒反应 |
| 危 害 物品分类 | 无 |

## 四、紧急处理与急救措施：

| | |
|---|---|
| 紧急处理与急救措施 | 眼睛：迅速用大量水冲洗，注意冲洗时眼皮一定要掰开，并转动眼球来回冲洗，当经冲洗仍感不适，应立即送医院治疗（千万不可在未用清水冲洗前用力揉搓眼部） |
| | 皮肤；用肥皂水、清水清洗 |
| | 吸入：尽快离开工作环境，到通风处呼吸新鲜空气 |

## 五、暴露预防措施

| | |
|---|---|
| 个人防护用具 | 眼部：最好带上防护眼镜 |
| | 皮肤：穿好工作服，尽量避免皮肤接触，或带防护手套，避免直接接触 |
| | 呼吸：带防护口罩 |
| 其它 | 通风设备：工作环境应通风良好，有抽换空气之设备 |
| 操作与储存 | 带防护镜、穿工作服、防护手套进行操作，取用后应密闭放阴凉通风处 |
| 个人卫生 | 尽量避免长时间操作接触，工作完应以肥皂清洗接触部位。 |

## 六、消防措施

| |
|---|
| 适用灭火剂：泡沫、干粉、CO2、CC14、K2CO3、ABC 等。 |
| 灭火时可能遇之特殊危害：HC1,CO2,CO 会令人中毒而死亡。 |
| 特殊灭火程序：使用水雾冷却暴露火焰下之容器设备，移出可燃物 |
| 消防人员之特殊消防设备：消防人员必须佩戴全身式化学防护衣及空气呼吸器（必要时外加抗闪火铝质被覆外套） |

## 七、安全处理与储存方法

| |
|---|
| 处置：使用时亦应保持远离火源，做好整理整顿以避免粉末积累。 |
| 储存：<br>1、 储存于阴凉、干燥、通风良好的区域，避免阳光直接照射并远离不兼容物（热源及火源）；<br>2、 储存在适当，有标签的包装桶上。<br>3、 储存区应备有灭火器材。 |

## 八、物理化学性质

| |
|---|
| 物质状态（外观、颜色、气味）：澄清、透明、无色、有刺激性气味的液体 |
| 比重：~0.90 |
| 沸点：700C~1300C |

| |
|---|
| 溶点：约-450C |
| 蒸汽压：~730mmHg |
| 蒸汽密度（空气=1）：0.80~0.95 |
| 挥发速率（醋酸丁酯=1）：2~6 |
| 水溶性：完全不溶於水 |
| PH：非水 |

## 九、火灾及爆炸危害资料

| |
|---|
| 闪火点：~100C |
| 爆炸界限：爆炸上限（LEL）7%（V） |
| 测试方法：开杯子　√开杯 |
| 爆炸下限（UEL）：1%（V） |
| 灭火器材：可使用一般泡沫、干粉、CO2、CC14、K2CO3、ABC 等都可使用。 |
| 禁用之灭火器材：无<br>特殊灭火程序：直接对火源的上方往下喷即可 |

## 十、安定性及反应性

| |
|---|
| 安定性：正常状况下安定 |
| 不相容性：与水、醇皆不相容 |
| 危害聚合物：无危害聚合物 |
| 危害分解物：无危害的分解物物质 |
| 应避免之状况：避免与强氧化剂接触 |

## 十一、 毒性资料:

| |
|---|
| 急毒性:加热产生蒸汽可能有刺激,造成喉咙痛、恶心 LD50(测试动物、吸收途径：10000mg/kg 大鼠吞食) |
| 局部反应：无 |
| 致敏感性：无 |
| 慢毒性或长期毒性：没有证据显示具有毒性特性 |
| 特殊效应： |

## 十二、 生态资料

| |
|---|
| 可能之环境影响：无法在自然环境中被生物分解，为防止被海洋生物或鸟类啄食，严禁丢至海洋或水域。 |

## 十三、 泄漏之紧急处理与废弃物处置

| |
|---|
| 外泄之紧急处理：改用其他容器盛装 |
| 废弃物属性（管制性有毒废弃物或一般事业废弃物）：一般废弃物 |
| 废弃物处理方法：有专用桶密封放置於指定区域，以备日后回收公司处理 |

## 十四、 运送资料

| |
|---|
| 国际运送规定：并无危险分类 |
| 国内运送规定：并无危险分类 |
| 特殊运送方法及注意事项 |

## 十五、 法规资料：

| |
|---|
| 适用法规：<br>劳工安全卫生设施规则<br>危险物及有害物通识规则<br>高压气体劳工安全规则<br>劳工作业环境空气中有害容许浓度标准<br>道路安全规则 |

## 十六、 其他资料

| | | |
|---|---|---|
| 参考文献 | | |
| 备注 | 符合 Reach 1 /2/3 级物质的要求 | |
| 制表单位 | 公司名称：东莞市虎门信华精密雕刻厂 | |
| | 地址：东莞市虎门镇村头大岗山工业区 | |
| | 电话：0769－85151689　　传真号码：0769－85151889 | |
| 制表人 | 职位：品保 | 姓名： |
| 制表日期 | 2011-5-8 | 审核人： |

2011 年 5 月制定

东莞市虎门信华精密雕刻厂

# 惠勝塑膠(深圳)有限公司

# 物質安全資料表

## 一、 物品與廠商資料：

物料名稱： PVC 膠料

物品編號：無資料

制造商或供應商名稱：惠勝塑膠(深圳)有限公司

聯系電話： **TEL：0755-33867988 FAX：0755-33863011**

## 二、 成分辨識資料：

| 主要物質成份 | | | 含量(%) |
|---|---|---|---|
| 成份名稱 | CAS NO. | 分子式 | |
| PVC 粉 | 9002-86-2 | $(C_2H_3C1)_n$ | 45~50 |
| 可塑剂 | 3319-31-1 | $C_{26}H_{42}O_4$ | 18~30 |
| 填充剂 | 0471-34-1 | $CaCO_3$ | 27~30 |
| 安定剂 | 1592-23-0 | Ca~Zn | 2.5-3.0 |
| 阻燃劑 | 1309-64-4 | $Sb_20_3$ | 1.5~2.0 |
| 滑剂 | 9002-88-4 | H-ST | 0.5~1.0 |

## 三、 危害辨識資料：

| | |
|---|---|
| 最重要危害效應 | 健康危害效應：無 |
| | 環境影響：環保產品 低鉛低鎘(鉛<40PPM 鎘<5PPM 汞<2PPM 六價鉻<2PPM 不含 PBBs 和 PBDEs |
| | 物理性及化學性危害：燃燒時產生氯化物、產生輕微氣味與粉塵 |
| | 特殊危害：無 |
| 主要症狀：嘔吐 | |
| 物品危害分類：无 | |

## 四、 急救措施：

不同暴露途徑之急救方法：

- 吸入：未有資料
- 皮膚接觸：粉塵與顆粒觸到皮膚，用清洗劑與清水清洗，嚴重時送醫治
- 食入：用手按喉吐出，嚴重時送醫治療

最重要症狀及危害效應：燃燒時產生氯化物

對急救人員之防護：無資料

對醫師之提示：無資料

## 五、 滅火措施

適用滅火劑：二氧化碳

滅火時可能遭遇之特殊危害：防止口腔、眼睛長時間接觸

特殊滅火程序：無資料

消防人員之特殊防護設備：口罩、手套

## 六、 泄漏處理方法：

個人應注意事項：配載口罩 手套

環境注意事項：回收及收取飛散之物

清理方法：設有良好的通風排氣裝置

## 七、 安全處置與儲存方法：

處置：使用時不要品嘗膠粒味道，保持通風空氣循環

儲存： 1、儲於阻涼、通風良好的地區，遠離熱源、火花、火焰。

2、避免陽光直接照射，以免老化。

3、與其它可燃物隔離。

## 八、 暴露預防措施：

工程控制：無資料

控制參數：八小時日時量平均容許濃度/短時間量平均容許濃度/最高容許濃度

- 生物指標：

個人防護設備：

- 呼吸防護：配戴口罩
- 手部防護：清水清洗
- 眼睛防護：清水清洗，嚴重時送醫治療
- 皮膚及身體防護：清水清洗，嚴重送醫治療

衛生措施：

## 九、 物理及化學性質：

| | |
|---|---|
| 物質狀態：固體 | 形狀：顆粒狀 |
| 顏色：多色 | 氣味：稍有異味 |
| PH 值：无 | 融点：130℃ |
| 再次成型參考溫度：145℃~180℃ | 閃火點：<br>測試方法： 開杯 閉杯 |
| 自然溫度：常溫 | 保存期：六个月 |
| 蒸氣壓：無資料 | 蒸氣密度：無資料 |
| 密度：1.3~1.5g/cm$^3$ | 水中溶解度：不溶解 |

## 十、 安全性及反應性：

安定性：安定

特殊狀況下可能之危害反應：不會發生

應避免之狀況：

應避免之物質：強氧化劑、強酸、強鹼。

危害分解物：

## 十一、 毒性資料：

急毒性：無

局部效應：無

致敏感性：無

慢毒性或長期毒性：無資料

特殊效應：無資料

## 十二、 生態資料：

不能棄于水域、林域地帶，避免鳥魚攝取

## 十三、 廢棄處置方法：

廢棄處置方法：不能棄于水域，林域地帶，避免鳥魚攝取

## 十四、 運送資料：

國際運送規定：無資料

聯合國編號：無資料

國內運送規定：無資料

特殊運送方法及注意事項：避免同酸性物質一起輸送，如因意外而外漏，要立即回收。

## 十五、 法規資料：

| |
|---|
| 適用法規：消防法、衛生法 |

## 十六、 其它資料：

| | | |
|---|---|---|
| 參考文獻 | | |
| 制表單位 | 名稱：惠勝塑膠(深圳)有限公司 | |
| | 地址：深圳市沙井鎮西環路民主九九工業城 E 區 2 號 | |
| 制表人 | 職稱：品保部長 | 姓名(簽章):羅世龍 |

惠勝塑胶（深圳）有限公司

# Test Report (SVHC)



Client Name: BAIHONG METAL TECHNOLOGY (ANFU) CO., LTD

Client Address: BUIDING3, ANFU, INDUSTRIAL PARK, JI AN CITY JIANGXI PROVINCE

Sample Name: TINNED COPPER COIN

The above sample(s) and information were provided by the client.

---

SGS Job No.: SZP24-003363

Sample Receiving Date: Feb 19, 2024

Testing Period: Feb 19, 2024 ~ Feb 26, 2024

Test Requested: As requested by client, SVHC screening is performed according to:
(i) Sixty two (62) inorganic substances and additional eleven (11) organic metallic substances in the Candidate List of Substances of Very High Concern (SVHC) for authorization published by European Chemicals Agency (ECHA) on and before Jan 23, 2024 regarding Regulation (EC) No 1907/2006 concerning the REACH.

Test Method(s): Please refer to next page(s).

Test Result(s): Please refer to next page(s).

**Summary:**

| | |
|---|---|
| According to the specified scope and evaluation screening, the test results of SVHC are ≤ 0.1% (w/w) in the submitted sample. | Pass |

Signed for and on behalf of
SGS-CSTC Standards Technical Services Co., Ltd. Shenzhen Branch

Andy Ni
Approved Signatory

scan to see the report
BFFC965C

SGS-CSTC Standards Technical Services Co., Ltd. Shenzhen Branch Testing Center Chemical Laboratory

Unless otherwise agreed in writing, this document is issued by the Company subject to its General Conditions of Service printed overleaf, available on request or accessible at http://www.sgs.com/en/Terms-and-Conditions.aspx and, for electronic format documents, subject to Terms and Conditions for Electronic Documents at http://www.sgs.com/en/Terms-and-Conditions/Terms-e-Document.aspx. Attention is drawn to the limitation of liability, indemnification and jurisdiction issues defined therein. Any holder of this document is advised that information contained hereon reflects the Company's findings at the time of its intervention only and within the limits of Client's instructions, if any. The Company's sole responsibility is to its Client and this document does not exonerate parties to a transaction from exercising all their rights and obligations under the transaction documents. This document cannot be reproduced except in full, without prior written approval of the Company. Any unauthorized alteration, forgery or falsification of the content or appearance of this document is unlawful and offenders may be prosecuted to the fullest extent of the law. Unless otherwise stated the results shown in this test report refer only to the sample(s) tested.
Attention: To check the authenticity of testing /inspection report & certificate, please contact us at telephone: (86-755) 8307 1443, or email: CN.Doccheck@sgs.com
Room 101-901, Plant 4 & Room 101, Plant 2 & Room 101, Plant 3 & Room 301-501, Plant 3, Jianghao (Bantian) Industrial Plant Area, No. 430, Jihua Road, Bantian Community, Bantian Street, Longgang District, Shenzhen, Guangdong, China 518129 www.sgsgroup.com.cn
中国·广东·深圳市龙岗区坂田街道坂田社区吉华路430号江灏（坂田）工业厂区厂房4号101-901、2号101、3号101、3号301-501 邮编:518129 t (86-755) 25328888 sgs.china@sgs.com
Member of the SGS Group (SGS SA)

**Remark :**

1. The chemical analysis of specified SVHC is performed by means of currently available analytical techniques against the following SVHC related documents published by ECHA:
   http://echa.europa.eu/web/guest/candidate-list-table
   These lists are under evaluation by ECHA and may subject to change in the future.
2. REACH obligation:
   2.1 Concerning article(s):
   Communication:
   Article 33 of Regulation (EC) No 1907/2006 requires supplier of an article containing a substance meeting the criteria in Article 57 and identified in accordance with Article 59(1) in a concentration above 0.1% weight by weight (w/w) shall provide the recipient of the article with sufficient information, available to the supplier, to allow safe use of the article including, as a minimum, the name of that substance in the Candidate List.

   Notification:
   In accordance with Regulation (EC) No 1907/2006, any EU producer or importer of articles shall notify ECHA, in accordance with paragraph 4 of Article 7, if a substance meets the criteria in Article 57 and is identified in accordance with Article 59(1) of the Regulation, if (a) the substance in the Candidate List is present in those articles in quantities totaling over one tonne per producer or importer per year; and (b) the substance in the Candidate List is present in those articles above a concentration of 0.1% weight by weight (w/w).

   Companies supplying articles containing substances of very high concern (SVHCs) on the Candidate List in a concentration above 0.1% weight by weight (w/w) on the EU market must comply with the Waste Framework Directive 2008/98/EC requirement and submit SCIP notifications on these articles to ECHA, as from 5 January 2021.

   2.2 Concerning material(s):
   Test results in this report are based on the tested sample. This report refers to testing result of tested sample submitted as homogenous material(s). In case such material is being used to compose an article, the results indicated in this report may not represent SVHC concentration in such article. If this report refers to testing result of composite material group by equal weight proportion, the material in each composite test group may come from more than one article.

   If the sample is a substance or mixture, and it directly exports to EU, client has the obligation to comply with the supply chain communication obligation under Article 31 of Regulation (EC) No. 1907/2006 and the conditions of Authorization of substance of very high concern included in the Annex XIV of the Regulation (EC) No. 1907/2006.

   2.3 Concerning substance and preparation:
   If a SVHC is found over 0.1% (w/w) and/or the specific concentration limit which is set in Regulation (EC) No 1272/2008 and its amendments, client is suggested to prepare a Safety Data Sheet (SDS) against the SVHC to comply with the supply chain communication obligation under Regulation (EC) No 1907/2006, in which:
   - a substance that is classified as hazardous under the CLP Regulation (EC) No 1272/2008.
   - a mixture that is classified as hazardous under the CLP Regulation (EC) No 1272/2008, when it contains a substance with concentration equal to, or greater than the classification limit as set in Regulation (EC) No. 1272/2008; or
   - a mixture is not classified as hazardous under the CLP Regulation (EC) No 1272/2008, but contains either:

SGS-CSTC Standards Technical Services Co., Ltd. Shenzhen Branch Testing Center Chemical Laboratory
检验检测专用章 Inspection & Testing Services

Unless otherwise agreed in writing, this document is issued by the Company subject to its General Conditions of Service printed overleaf, available on request or accessible at http://www.sgs.com/en/Terms-and-Conditions.aspx and, for electronic format documents, subject to Terms and Conditions for Electronic Documents at http://www.sgs.com/en/Terms-and-Conditions/Terms-e-Document.aspx. Attention is drawn to the limitation of liability, indemnification and jurisdiction issues defined therein. Any holder of this document is advised that information contained hereon reflects the Company's findings at the time of its intervention only and within the limits of Client's instructions, if any. The Company's sole responsibility is to its Client and this document does not exonerate parties to a transaction from exercising all their rights and obligations under the transaction documents. This document cannot be reproduced except in full, without prior written approval of the Company. Any unauthorized alteration, forgery or falsification of the content or appearance of this document is unlawful and offenders may be prosecuted to the fullest extent of the law. Unless otherwise stated the results shown in this test report refer only to the sample(s) tested .
Attention: To check the authenticity of testing /inspection report & certificate, please contact us at telephone: (86-755) 8307 1443, or email: CN.Doccheck@sgs.com
Room 101-901, Plant 4 & Room 101, Plant 2 & Room 101, Plant 3 & Room 301-501, Plant 3, Jianghao (Bantian) Industrial Plant Area, No. 430, Jihua Road, Bantian Community, Bantian Street, Longgang District, Shenzhen, Guangdong, China 518129 www.sgsgroup.com.cn
中国·广东·深圳市龙岗区坂田街道坂田社区吉华路430号江灏（坂田）工业厂区厂房4号101-901、2号101、3号101、3号301-501 邮编:518129 t (86-755) 25328888 sgs.china@sgs.com
Member of the SGS Group (SGS SA)

(a) a substance posing human health or environmental hazards in an individual concentration of ≥ 1 % by weight for mixtures that are solid or liquids (i.e., non-gaseous mixtures) or ≥ 0.2 % by volume for gaseous mixtures; or
(b) a substance that is PBT, or vPvB in an individual concentration of ≥ 0.1 % by weight for mixtures that are solid or liquids (i.e., non-gaseous mixtures); or
(c) a substance on the SVHC candidate list (for reasons other than those listed above), in an individual concentration of ≥ 0.1 % by weight for non-gaseous mixtures; or
(d) a substance for which there are Europe-wide workplace exposure limits

3. If a SVHC is found over the reporting limit, client is suggested to identify the composite component which contains the SVHC and the exact concentration of the SVHC by requesting further quantitative analysis from the laboratory.

**Test Sample:**

**Testing Group:**

| Test Result ID | Description | Test Part ID | SGS Sample ID |
|---|---|---|---|
| 001 | Silvery plated metal wire | A2 | SZX24-0003223-0001.C002 |

**Test Method:**
With reference to SGS In-House method, analysis was performed by ICP-OES, UV-VIS.

SGS-CSTC Standards Technical Services Co., Ltd. Shenzhen Branch Testing Center Chemical Laboratory

Unless otherwise agreed in writing, this document is issued by the Company subject to its General Conditions of Service printed overleaf, available on request or accessible at http://www.sgs.com/en/Terms-and-Conditions.aspx and, for electronic format documents, subject to Terms and Conditions for Electronic Documents at http://www.sgs.com/en/Terms-and-Conditions/Terms-e-Document.aspx. Attention is drawn to the limitation of liability, indemnification and jurisdiction issues defined therein. Any holder of this document is advised that information contained hereon reflects the Company's findings at the time of its intervention only and within the limits of Client's instructions, if any. The Company's sole responsibility is to its Client and this document does not exonerate parties to a transaction from exercising all their rights and obligations under the transaction documents. This document cannot be reproduced except in full, without prior written approval of the Company. Any unauthorized alteration, forgery or falsification of the content or appearance of this document is unlawful and offenders may be prosecuted to the fullest extent of the law. Unless otherwise stated the results shown in this test report refer only to the sample(s) tested .
Attention: To check the authenticity of testing /inspection report & certificate, please contact us at telephone: (86-755) 8307 1443, or email: CN.Doccheck@sgs.com
Room 101-901, Plant 4 & Room 101, Plant 2 & Room 101, Plant 3 & Room 301-501, Plant 3, Jianghao (Bantian) Industrial Plant Area, No. 430, Jihua Road, Bantian Community, Bantian Street, Longgang District, Shenzhen, Guangdong, China 518129 www.sgsgroup.com.cn
中国·广东·深圳市龙岗区坂田街道坂田社区吉华路430号江灏（坂田）工业厂区厂房4号101-901、2号101、3号101、3号301-501 邮编:518129 t (86-755) 25328888 sgs.china@sgs.com
Member of the SGS Group (SGS SA)

**Test Results: (Substances in the Candidate List of SVHC)**

| Batch | Substance Name | CAS No. | 001 Concentration (%) | RL (%) |
|---|---|---|---|---|
| - | All tested SVHC in Candidate list | - | ND | - |

**Notes:**

(1) The table above only shows detected SVHC, and SVHC that below RL are not reported. Please refer to Appendix for the full list of tested SVHC.

(2) RL = Reporting Limit (Test data will be shown if it ≥ RL. RL is not regulatory limit.)
ND = Not detected (lower than RL), ND is denoted on the SVHC substance.

(3) * The test result is based on the calculation of selected element(s) and to the worst-case scenario.
** The test result is based on the calculation of selected marker(s) and to the worst-case scenario.
Calculated concentration of boric compounds are based on water extractive boron detected by ICP-OES.
Calculated concentration of Barium diboron tetraoxide is based on water extractive boron and barium detected by ICP-OES.
RL = 0.005% is evaluated for element (i.e. cobalt, arsenic, lead, chromium (VI), aluminum, zirconium, boron, strontium, zinc, antimony, titanium, barium and cadmium respectively), except molybdenum RL=0.0005%, boron RL=0.0025% (only for Lead bis(tetrafluoroborate)), fluorine RL=0.050%.

(4) Results & photo(s) of this report refer to test report SZXEC24000322311.

Unless otherwise stated, the decision rule for conformity reporting is based on Binary Statement for Simple Acceptance Rule (*w*=0) stated in ILAC-G8:09/2019.

SGS-CSTC Standards Technical Services Co., Ltd. Shenzhen Branch Testing Center Chemical Laboratory

Unless otherwise agreed in writing, this document is issued by the Company subject to its General Conditions of Service printed overleaf, available on request or accessible at http://www.sgs.com/en/Terms-and-Conditions.aspx and, for electronic format documents, subject to Terms and Conditions for Electronic Documents at http://www.sgs.com/en/Terms-and-Conditions/Terms-e-Document.aspx. Attention is drawn to the limitation of liability, indemnification and jurisdiction issues defined therein. Any holder of this document is advised that information contained hereon reflects the Company's findings at the time of its intervention only and within the limits of Client's instructions, if any. The Company's sole responsibility is to its Client and this document does not exonerate parties to a transaction from exercising all their rights and obligations under the transaction documents. This document cannot be reproduced except in full, without prior written approval of the Company. Any unauthorized alteration, forgery or falsification of the content or appearance of this document is unlawful and offenders may be prosecuted to the fullest extent of the law. Unless otherwise stated the results shown in this test report refer only to the sample(s) tested .
Attention: To check the authenticity of testing /inspection report & certificate, please contact us at telephone: (86-755) 8307 1443, or email: CN.Doccheck@sgs.com
Room 101-901, Plant 4 & Room 101, Plant 2 & Room 101, Plant 3 & Room 301-501, Plant 3, Jianghao (Bantian) Industrial Plant Area, No. 430, Jihua Road, Bantian Community, Bantian Street, Longgang District, Shenzhen, Guangdong, China 518129 www.sgsgroup.com.cn
中国·广东·深圳市龙岗区坂田街道坂田社区吉华路430号江灏（坂田）工业厂区厂房4号101-901、2号101、3号101、3号301-501 邮编:518129 t (86-755) 25328888 sgs.china@sgs.com
Member of the SGS Group (SGS SA)

**Appendix**

**Full list of tested SVHC:**

| Batch | No. | Substance Name | CAS No. | RL (%) |
|---|---|---|---|---|
| I | 1 | Cobalt dichloride* | 7646-79-9 | 0.005 |
| I | 2 | Diarsenic pentaoxide* | 1303-28-2 | 0.005 |
| I | 3 | Diarsenic trioxide* | 1327-53-3 | 0.005 |
| I | 4 | Lead hydrogen arsenate* | 7784-40-9 | 0.005 |
| I | 5 | Sodium dichromate* | 10588-01-9 /7789-12-0 | 0.005 |
| I | 6 | Triethyl arsenate* | 15606-95-8 | 0.005 |
| II | 7 | Lead chromate molybdate sulphate red (C.I. Pigment Red 104)* | 12656-85-8 | 0.005 |
| II | 8 | Lead chromate* | 7758-97-6 | 0.005 |
| II | 9 | Lead sulfochromate yellow (C.I. Pigment Yellow 34)* | 1344-37-2 | 0.005 |
| III | 10 | Ammonium dichromate* | 7789-09-5 | 0.005 |
| III | 11 | Boric acid* | - | 0.005 |
| III | 12 | Disodium tetraborate, anhydrous* | 12179-04-3 /1303-96-4 /1330-43-4 | 0.005 |
| III | 13 | Potassium chromate* | 7789-00-6 | 0.005 |
| III | 14 | Potassium dichromate* | 7778-50-9 | 0.005 |
| III | 15 | Sodium chromate* | 7775-11-3 | 0.005 |
| III | 16 | Tetraboron disodium heptaoxide, hydrate* | 12267-73-1 | 0.005 |
| IV | 17 | Chromic acid, Oligomers of chromic acid and dichromic acid, Dichromic acid* | - | 0.005 |
| IV | 18 | Chromium trioxide* | 1333-82-0 | 0.005 |
| IV | 19 | Cobalt(II) carbonate* | 513-79-1 | 0.005 |
| IV | 20 | Cobalt(II) diacetate* | 71-48-7 | 0.005 |
| IV | 21 | Cobalt(II) dinitrate* | 10141-05-6 | 0.005 |
| IV | 22 | Cobalt(II) sulphate* | 10124-43-3 | 0.005 |
| V | 23 | strontium chromate* | 7789-06-2 | 0.005 |
| VI | 24 | Aluminosilicate Refractory Ceramic Fibres* | - | 0.005 |
| VI | 25 | Arsenic acid* | 7778-39-4 | 0.005 |
| VI | 26 | Calcium arsenate* | 7778-44-1 | 0.005 |
| VI | 27 | Dichromium tris(chromate)* | 24613-89-6 | 0.005 |
| VI | 28 | Lead diazide, Lead azide* | 13424-46-9 | 0.005 |
| VI | 29 | Lead dipicrate* | 6477-64-1 | 0.005 |
| VI | 30 | Lead styphnate* | 15245-44-0 | 0.005 |
| VI | 31 | Pentazinc chromate octahydroxide* | 49663-84-5 | 0.005 |
| VI | 32 | Potassium hydroxyoctaoxodizincatedichromate* | 11103-86-9 | 0.005 |
| VI | 33 | Trilead diarsenate* | 3687-31-8 | 0.005 |
| VI | 34 | Zirconia Aluminosilicate Refractory Ceramic Fibres* | - | 0.005 |
| VII | 35 | Diboron trioxide* | 1303-86-2 | 0.005 |
| VII | 36 | Lead(II) bis(methanesulfonate)* | 17570-76-2 | 0.005 |
| VIII | 37 | [Phthalato(2-)]dioxotrilead* | 69011-06-9 | 0.005 |
| VIII | 38 | Acetic acid, lead salt, basic* | 51404-69-4 | 0.005 |

检验检测专用章 Inspection & Testing Services
SGS-CSTC Standards Technical Services Co., Ltd. Shenzhen Branch Testing Center Chemical Laboratory

Unless otherwise agreed in writing, this document is issued by the Company subject to its General Conditions of Service printed overleaf, available on request or accessible at http://www.sgs.com/en/Terms-and-Conditions.aspx and, for electronic format documents, subject to Terms and Conditions for Electronic Documents at http://www.sgs.com/en/Terms-and-Conditions/Terms-e-Document.aspx. Attention is drawn to the limitation of liability, indemnification and jurisdiction issues defined therein. Any holder of this document is advised that information contained hereon reflects the Company's findings at the time of its intervention only and within the limits of Client's instructions, if any. The Company's sole responsibility is to its Client and this document does not exonerate parties to a transaction from exercising all their rights and obligations under the transaction documents. This document cannot be reproduced except in full, without prior written approval of the Company. Any unauthorized alteration, forgery or falsification of the content or appearance of this document is unlawful and offenders may be prosecuted to the fullest extent of the law. Unless otherwise stated the results shown in this test report refer only to the sample(s) tested .
Attention: To check the authenticity of testing /inspection report & certificate, please contact us at telephone: (86-755) 8307 1443, or email: CN.Doccheck@sgs.com
Room 101-901, Plant 4 & Room 101, Plant 2 & Room 101, Plant 3 & Room 301-501, Plant 3, Jianghao (Bantian) Industrial Plant Area, No. 430, Jihua Road, Bantian Community, Bantian Street, Longgang District, Shenzhen, Guangdong, China 518129 www.sgsgroup.com.cn
中国·广东·深圳市龙岗区坂田街道坂田社区吉华路430号江灏（坂田）工业厂区厂房4号101-901、2号101、3号101、3号301-501 邮编:518129 t (86-755) 25328888 sgs.china@sgs.com
Member of the SGS Group (SGS SA)

| Batch | No. | Substance Name | CAS No. | RL (%) |
|---|---|---|---|---|
| VIII | 39 | Dioxobis(stearato)trilead* | 12578-12-0 | 0.005 |
| VIII | 40 | Fatty acids, C16-18, lead salts* | 91031-62-8 | 0.005 |
| VIII | 41 | Lead bis(tetrafluoroborate)* | 13814-96-5 | 0.005 |
| VIII | 42 | Lead cyanamidate* | 20837-86-9 | 0.005 |
| VIII | 43 | Lead dinitrate* | 10099-74-8 | 0.005 |
| VIII | 44 | Lead monoxide* | 1317-36-8 | 0.005 |
| VIII | 45 | Lead oxide sulfate* | 12036-76-9 | 0.005 |
| VIII | 46 | Lead tetroxide (orange lead)* | 1314-41-6 | 0.005 |
| VIII | 47 | Lead titanium trioxide* | 12060-00-3 | 0.005 |
| VIII | 48 | Lead titanium zirconium oxide* | 12626-81-2 | 0.005 |
| VIII | 49 | Pentalead tetraoxide sulphate* | 12065-90-6 | 0.005 |
| VIII | 50 | Pyrochlore, antimony lead yellow* | 8012-00-8 | 0.005 |
| VIII | 51 | Silicic acid, barium salt, lead-doped* | 68784-75-8 | 0.005 |
| VIII | 52 | Silicic acid, lead salt* | 11120-22-2 | 0.005 |
| VIII | 53 | Sulfurous acid, lead salt, dibasic* | 62229-08-7 | 0.005 |
| VIII | 54 | Tetraethyllead* | 78-00-2 | 0.005 |
| VIII | 55 | Tetralead trioxide sulphate* | 12202-17-4 | 0.005 |
| VIII | 56 | Trilead bis(carbonate)dihydroxide (basic lead carbonate)* | 1319-46-6 | 0.005 |
| VIII | 57 | Trilead dioxide phosphonate* | 12141-20-7 | 0.005 |
| IX | 58 | Cadmium oxide* | 1306-19-0 | 0.005 |
| IX | 59 | Cadmium | 7440-43-9 | 0.005 |
| X | 60 | Cadmium sulphide* | 1306-23-6 | 0.005 |
| X | 61 | Lead di(acetate)* | 301-04-2 | 0.005 |
| XI | 62 | Cadmium chloride* | 10108-64-2 | 0.005 |
| XI | 63 | Sodium perborate; perboric acid, sodium salt* | - | 0.005 |
| XI | 64 | Sodium peroxometaborate* | 7632-04-4 | 0.005 |
| XII | 65 | Cadmium fluoride* | 7790-79-6 | 0.005 |
| XII | 66 | Cadmium sulphate* | 10124-36-4 /31119-53-6 | 0.005 |
| XVIII | 67 | Cadmium nitrate* | 10325-94-7 | 0.005 |
| XVIII | 68 | Cadmium carbonate* | 513-78-0 | 0.005 |
| XVIII | 69 | Cadmium hydroxide* | 21041-95-2 | 0.005 |
| XIX | 70 | Disodium octaborate* | 12008-41-2 | 0.005 |
| XIX | 71 | Lead | 7439-92-1 | 0.005 |
| XXV | 72 | Orthoboric acid, sodium salt* | 13840-56-7 | 0.005 |
| XXVIII | 73 | Barium diboron tetraoxide* | 13701-59-2 | 0.005 |

检验检测专用章 Inspection & Testing Services
SGS-CSTC Standards Technical Services Co., Ltd. Shenzhen Branch Testing Center Chemical Laboratory

Unless otherwise agreed in writing, this document is issued by the Company subject to its General Conditions of Service printed overleaf, available on request or accessible at http://www.sgs.com/en/Terms-and-Conditions.aspx and, for electronic format documents, subject to Terms and Conditions for Electronic Documents at http://www.sgs.com/en/Terms-and-Conditions/Terms-e-Document.aspx. Attention is drawn to the limitation of liability, indemnification and jurisdiction issues defined therein. Any holder of this document is advised that information contained hereon reflects the Company's findings at the time of its intervention only and within the limits of Client's instructions, if any. The Company's sole responsibility is to its Client and this document does not exonerate parties to a transaction from exercising all their rights and obligations under the transaction documents. This document cannot be reproduced except in full, without prior written approval of the Company. Any unauthorized alteration, forgery or falsification of the content or appearance of this document is unlawful and offenders may be prosecuted to the fullest extent of the law. Unless otherwise stated the results shown in this test report refer only to the sample(s) tested .
Attention: To check the authenticity of testing /inspection report & certificate, please contact us at telephone: (86-755) 8307 1443, or email: CN.Doccheck@sgs.com
Room 101-901, Plant 4 & Room 101, Plant 2 & Room 101, Plant 3 & Room 301-501, Plant 3, Jianghao (Bantian) Industrial Plant Area, No. 430, Jihua Road, Bantian Community, Bantian Street, Longgang District, Shenzhen, Guangdong, China 518129 www.sgsgroup.com.cn
中国·广东·深圳市龙岗区坂田街道坂田社区吉华路430号江灏（坂田）工业厂区厂房4号101-901、2号101、3号101、3号301-501 邮编:518129 t (86-755) 25328888 sgs.china@sgs.com
Member of the SGS Group (SGS SA)

## ATTACHMENTS

### Testing Flow Chart

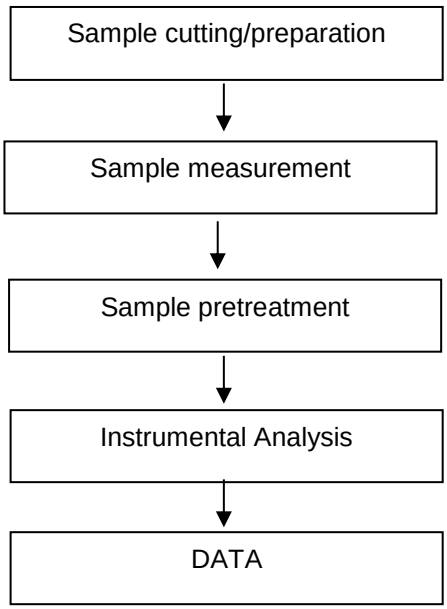


Unless otherwise agreed in writing, this document is issued by the Company subject to its General Conditions of Service printed overleaf, available on request or accessible at http://www.sgs.com/en/Terms-and-Conditions.aspx and, for electronic format documents, subject to Terms and Conditions for Electronic Documents at http://www.sgs.com/en/Terms-and-Conditions/Terms-e-Document.aspx. Attention is drawn to the limitation of liability, indemnification and jurisdiction issues defined therein. Any holder of this document is advised that information contained hereon reflects the Company's findings at the time of its intervention only and within the limits of Client's instructions, if any. The Company's sole responsibility is to its Client and this document does not exonerate parties to a transaction from exercising all their rights and obligations under the transaction documents. This document cannot be reproduced except in full, without prior written approval of the Company. Any unauthorized alteration, forgery or falsification of the content or appearance of this document is unlawful and offenders may be prosecuted to the fullest extent of the law. Unless otherwise stated the results shown in this test report refer only to the sample(s) tested .
Attention: To check the authenticity of testing /inspection report & certificate, please contact us at telephone: (86-755) 8307 1443, or email: CN.Doccheck@sgs.com
SGS-CSTC Standards Technical Services Co., Ltd. Shenzhen Branch Testing Center Chemical Laboratory
Room 101-901, Plant 4 & Room 101, Plant 2 & Room 101, Plant 3 & Room 301-501, Plant 3, Jianghao (Bantian) Industrial Plant Area, No. 430, Jihua Road, Bantian Community, Bantian Street, Longgang District, Shenzhen, Guangdong, China 518129 www.sgsgroup.com.cn
中国·广东·深圳市龙岗区坂田街道坂田社区吉华路430号江灏（坂田）工业厂区厂房4号101-901、2号101、3号101、3号301-501 邮编:518129 t (86-755) 25328888 sgs.china@sgs.com
Member of the SGS Group (SGS SA)

**Sample photos:**




SZX24-0003223-0001.C002

SGS authenticate the photo on original report only

*** End of Report ***

Unless otherwise agreed in writing, this document is issued by the Company subject to its General Conditions of Service printed overleaf, available on request or accessible at http://www.sgs.com/en/Terms-and-Conditions.aspx and, for electronic format documents, subject to Terms and Conditions for Electronic Documents at http://www.sgs.com/en/Terms-and-Conditions/Terms-e-Document.aspx. Attention is drawn to the limitation of liability, indemnification and jurisdiction issues defined therein. Any holder of this document is advised that information contained hereon reflects the Company's findings at the time of its intervention only and within the limits of Client's instructions, if any. The Company's sole responsibility is to its Client and this document does not exonerate parties to a transaction from exercising all their rights and obligations under the transaction documents. This document cannot be reproduced except in full, without prior written approval of the Company. Any unauthorized alteration, forgery or falsification of the content or appearance of this document is unlawful and offenders may be prosecuted to the fullest extent of the law. Unless otherwise stated the results shown in this test report refer only to the sample(s) tested .

Attention: To check the authenticity of testing /inspection report & certificate, please contact us at telephone: (86-755) 8307 1443, or email: CN.Doccheck@sgs.com

SGS-CSTC Standards Technical Services Co., Ltd. Shenzhen Branch Testing Center Chemical Laboratory

Room 101-901, Plant 4 & Room 101, Plant 2 & Room 101, Plant 3 & Room 301-501, Plant 3, Jianghao (Bantian) Industrial Plant Area, No. 430, Jihua Road, Bantian Community, Bantian Street, Longgang District, Shenzhen, Guangdong, China 518129 www.sgsgroup.com.cn

中国·广东·深圳市龙岗区坂田街道坂田社区吉华路430号江灏（坂田）工业厂区厂房4号101-901、2号101、3号101、3号301-501 邮编:518129 t (86-755) 25328888 sgs.china@sgs.com

Member of the SGS Group (SGS SA)