Rev.	Date	Update Description	Signed	Remark	Approve

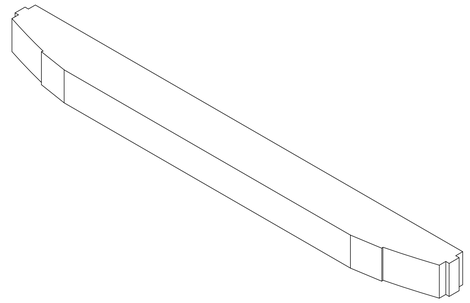



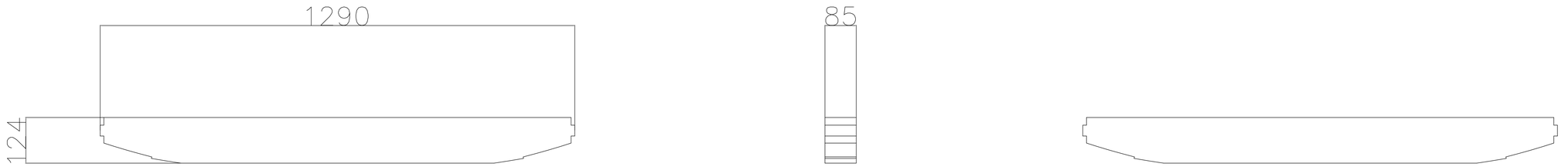



NOTE: 只需要放在TOP

ITEMS		SPEC. VALUE	REMARK
Dimension L x W x H (mm)		1290*124*85MM	
Material	Weight		
	Color	White	
	Material	EPE	
	Density	23kg/m3	
	Tolerance	±5	

SING HOME POLYFOAM CO., LTD

Projection

Customer	DIVA
Part No.	3MD664PK150
Project No.	FRU EPE FILLER (MIDDLE)-2 (RUG5513AMI)

Date	20240827	Designer	Josh
Scale	1:1	Checked	
Unit	mm		