





設計驗證
工程課
2024 -08- 01
發行
宏碁科技開發股份有限公司

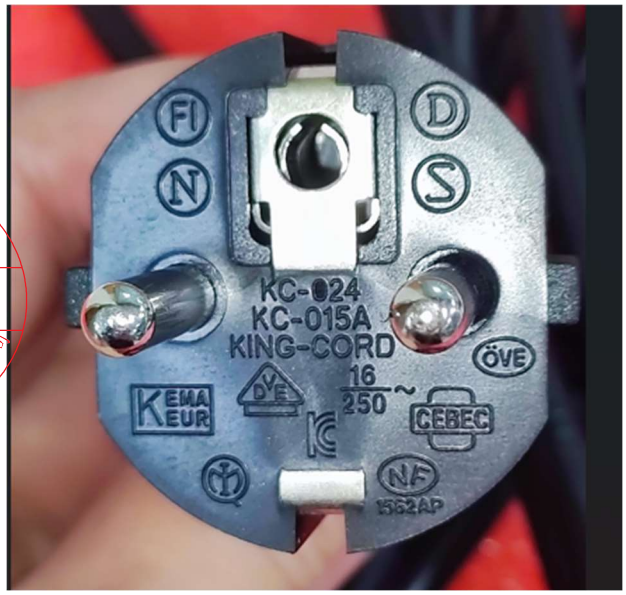



SPECIFICATION

KING-CORD

APPROVED

☑ **HEAD OFFICE & FACTORY:**
KING-CORD CO., LTD
NO. 52-5,Sia Si Hu,Shang Hu Village,
Yang Mei Township,
Tao Yuan County TAIWAN
TEL: 886-3-472-6208
FAX: 886-3-472-7751

☑ **FACTORY:**
KING-CORD ELECTRONICS (SHEN ZHEN) CO.,LTD
No.B2,The West Industry Park of Tan Tou,
Song Gang Town Bao'an District,
Shen Zhen City Guangdong CHINA
TEL: 86-755-2768-2890
FAX: 86-755-2768-2897

RoHS Compliant

KING-CORD Confidential Proprietary

CUSTOMER NAME:	鈺緯
CUSTOMER P/NO:	**3KP0000015B**(K0945)
KING-CORD/NO:	**K5A031PG300BYD-L**
EDITION:	**D**

CUSTOMER APPR	APPR	CHECK	MADE
設計驗證 工程課 2024-08-01 發行 鈺緯科技開發股份有限公司			*LI YONGHUAN*

INDEX

1 Product Drawing

2 Plug Drawing

3 Connector Drawing

4 Sample Testing Standard

5 Safety Approval For Product

6 The Schedule For The Environment Material Management

7 COC

KING-CORD Confidential Proprietary

KC-015A:
KC-024:

KC-003: N13389

RoHS Compliant

設計驗證
工程課
2024-08-01
發行
鈺緯科技開發股份有限公司

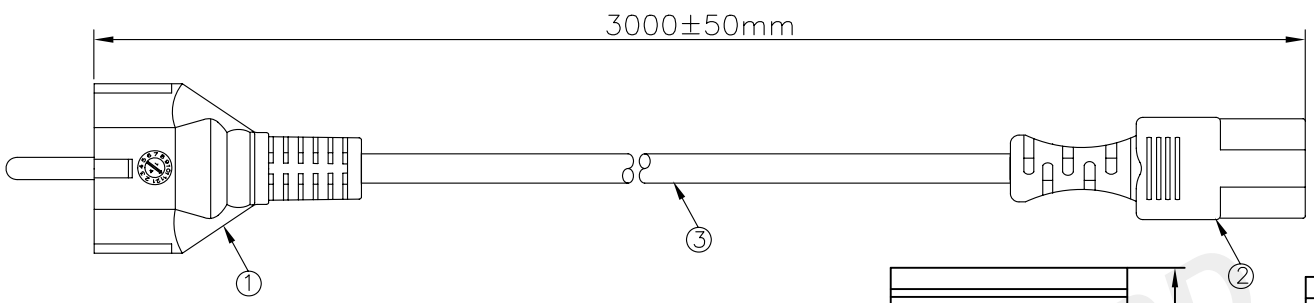

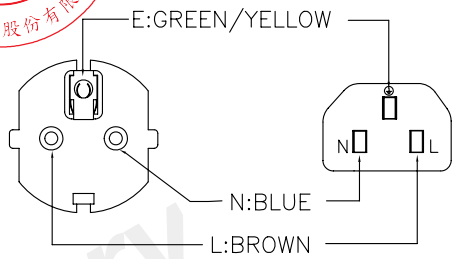

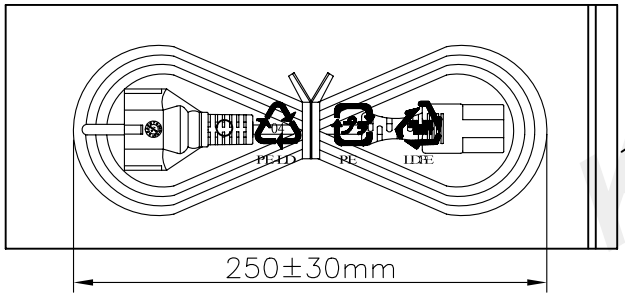

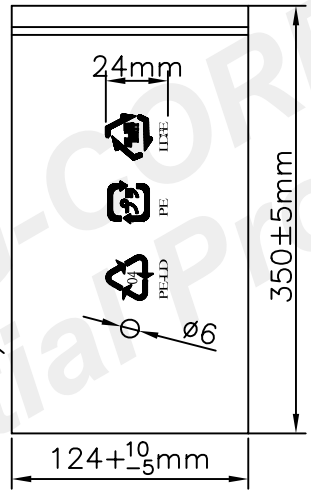



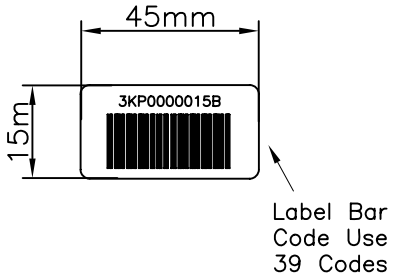

This product does not contain red phosphorus

KING-CORD Confidential Proprietary

RECORD OF CHANGE

DATE	REV	DESCRIPTION OF CHANGE
APR.25.2019	A	NEW PRODUCT
MAY.13.2019		DIMENSIONS OF PE BAG CHANGED TO 124*350mm
JUL.16.2019	B	Change KING-CORD material number from K5A031PG300BYD to K5A031PG300BYD-L
NOV.07.2019	C	Change the printing content of I-sheng power cord
JUL.23.2024	D	1.KC-003 ACCORDING TO SAFETY REGULATIONS, DELETE THE WORD "S" FROM THE CCC LOGO
		2.UPDATE THE CONTENT OF I-SHENG LINE

NO:	DESCRIPTION	Q'TY	REMARK
1	Plug:KC-015A/KC-024,16A 250V~(IEC 60884-1)	1PC	
2	Connector:KC-003,10A 250V~(EN 60320 C13)	1PC	
3	Cable:H05VV-F 3G1.0mm²+KOREA DENT MARK	1PC	BLACK
	PRINTING		

UNIT:mm

NOTES:

CUSTOMER NAME: 鈺緯

CUSTOMER NO.: 3KP0000015B(K0945)

KING-CORD NO.: K5A031PG300BYD-L

KING-CORD CO.,LTD.

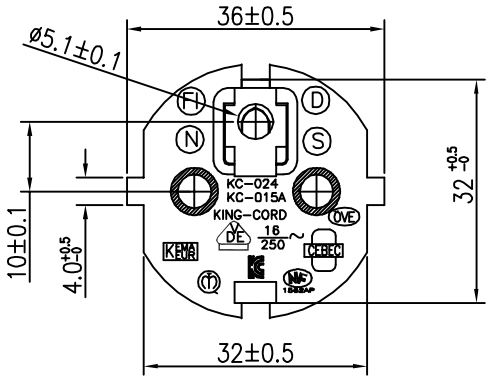

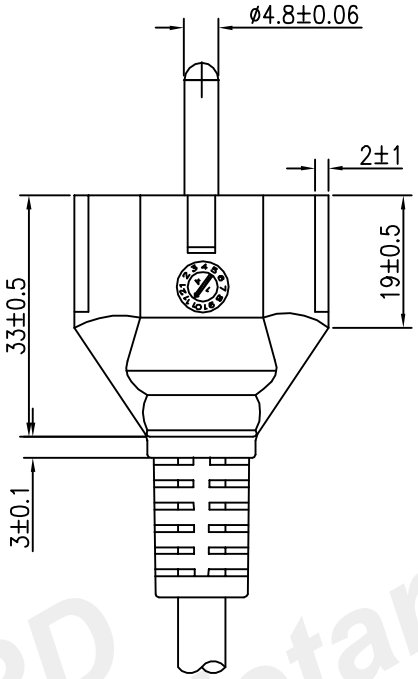

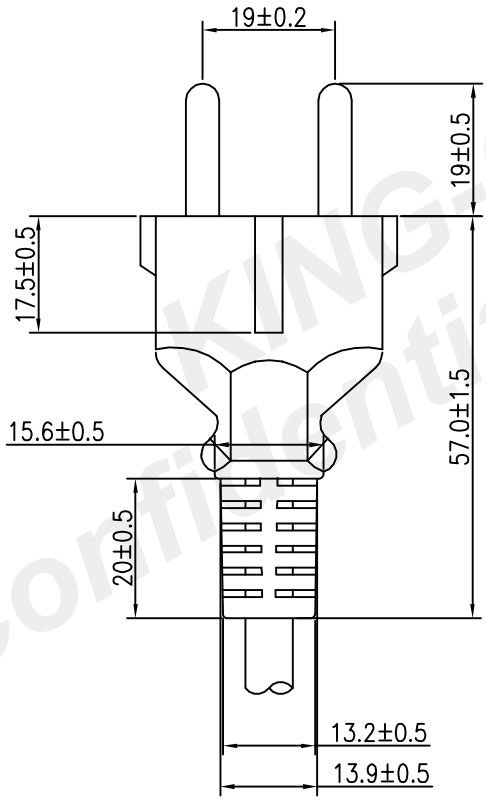

KING-CORD
Confidential Proprietary

Drawer	guozl	Unite	mm	Date	2014.03.19	
Scale	1/1	Current	16A 250V~	Drawing No	KC-015A KC-024	

REV	DESCRIPTION	DATE
A	NEW	14.03.19

KING-CORD CO.,LTD.

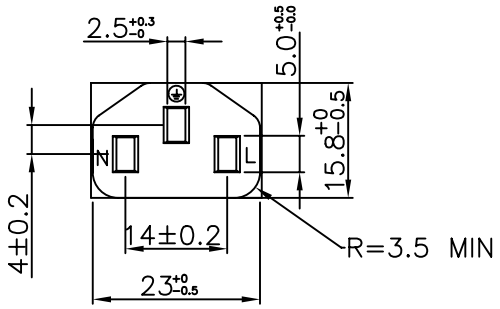

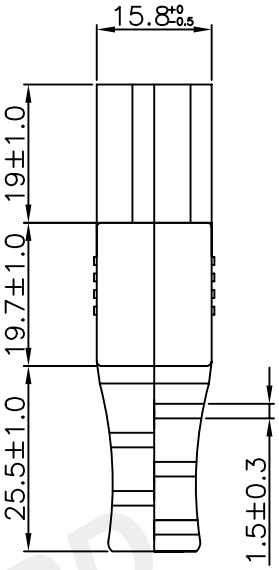

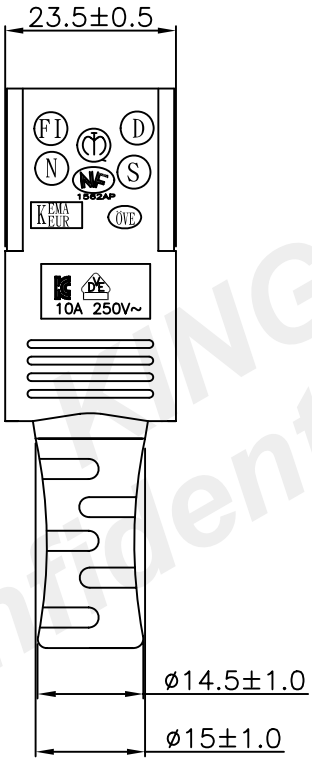

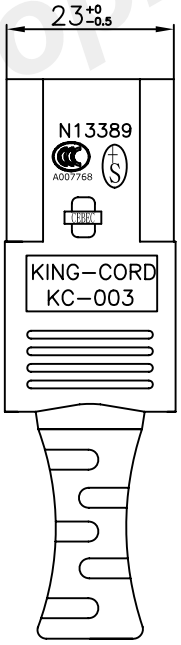

KING-CORD
Confidential Proprietary

B	ACCORDING TO SAFETY REGULATIONS, DELETE THE WORD "S" FROM THE CCC LOGO	23.08.22
A	NEW	14.02.26
REV	DESCRIPTION	DATE

Drawer	kale	Unite	mm	Date	2023.08.22
Scale	1/1	Current	10A 250V~	Drawing No	KC-003

KING-CORD CO.,LTD.

1.Scope:

This specification is applied to H05VV-F 3G 1.0mm^2 power cord.

2.Applicable Safety Standard

IEC 60884-1

EN 60320 C13

3.Construction:

3.1 Plug : Catalogue No. KC-015A(EUROPE/KOREA type)

3.2 Connector : Catalogue No. KC-003(EUROPE/KOREA type)

3.3 Flexible Cord Approved Manufacturers

Manufacturer	VDE&KOREA File NO	Flexible cord
I-SHENG	**40006070 SU01015-4001**	**H05VV-F**

3.4 PVC Flexible Cord

TYPES	CONDUCTOR		CORE	INSULATION THICKNESS	JACKET THICKNESS	OVERALL DIAMETER	RATING		
							Voltage	Temp.	Current
	mm^2	NO./mm		mm	mm	mm	V	℃	A
H05VV-F	**1.00**	**32/0.192 ±0.008**	**3**	**0.6**	**0.8**	**7.0±0.15**	**300/500**	**70**	**10**
IN CASE OF DISPUTE, CONDUCTOR RESISTANCE SHALL BE THE REFEREE METHOD									

PG (H05VV-F 3G1.0mm^2)

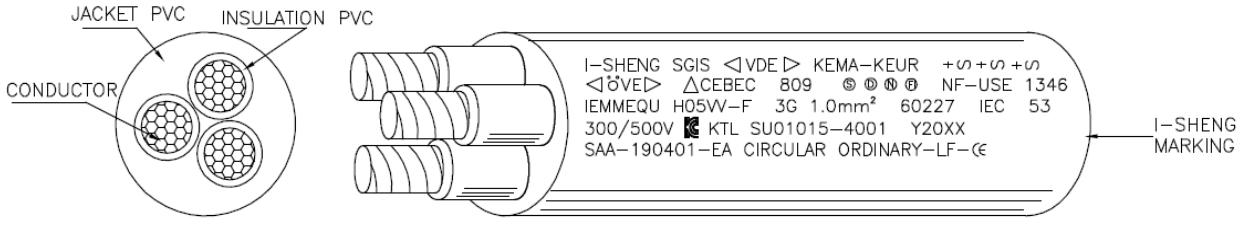

VDE Prüf- und Zertifizierungsinstitut

ZEICHENGENEHMIGUNG
MARKS APPROVAL

I-Sheng Electric Wire & Cable Co., Ltd.
52 Tin Hwu Road, Ta Hua Village
33334 GWAI SAN, TAOYUAN HSIEN
TAIWAN

ist berechtigt, für ihr Produkt /
is authorized to use for their product

Starkstromleitungen für allgemeine Anwendungen
- Flexible Leitungen
mit thermoplastischer PVC-Isolierung
Cables for general applications
- Flexible cables with
thermoplastic PVC insulation

die hier abgebildeten markenrechtlich geschützten Zeichen
für die ab Blatt 2 aufgeführten Typen zu benutzen /
the legally protected Marks as shown below for the types referred to on page 2 ff.

◁VDE▷ oder/*or* ◁▷ oder/*or* 

Geprüft und zertifiziert nach /
Tested and certified according to

DIN EN 50525-2-11 (VDE 0285-525-2-11):2012-01; EN 50525-2-11:2011

Aktenzeichen: 1276303-5140-0005 / 170954
File ref.:

VDE Prüf- und Zertifizierungsinstitut GmbH
VDE Testing and Certification Institute
Zertifizierungsstelle / *Certification*

Ausweis-Nr. 40006070 Blatt 1
Certificate No. *Page*

Weitere Bedingungen siehe Rückseite und Folgeblätter /
further conditions see overleaf and following pages

Offenbach, 2003-04-25
(letzte Änderung/updated 2012-10-12)

S. Berber

VDE Zertifikate sind nur gültig bei Veröffentlichung unter:
VDE certificates are valid only when published on:
http://www.vde.com/zertifikat
http://www.vde.com/certificate

VDE

Name und Sitz des Genehmigungs-Inhabers / *Name andregistered seat of the Certificate holder*
I-Sheng Electric Wire & Cable Co., Ltd., 52 Tin Hwu Road, Ta Hua Village, 33334 GWAI SAN, TAOYUAN HSIEN, TAIWAN

Aktenzeichen / *File ref.*
1276303-5140-0005 / 170954 / FG42 / HEG

letzte Änderung / *updated* 2012-10-12
Datum / *Date* 2003-04-25

Dieses Blatt gilt nur in Verbindung mit Blatt 1 des Zeichengenehmigungsausweises Nr. 40006070
This supplement is only valid in conjunction with page 1 of the Certificate No. 40006070.

Starkstromleitungen für allgemeine Anwendungen
- Flexible Leitungen
mit thermoplastischer PVC-Isolierung
Cables for general applications
- Flexible cables with
thermoplastic PVC insulation

Typ(en) / *Type(s)*:

H03VV-F 2...3 x 0,5...0,75 mm²	+
H03VVH2-F 2 x 0,5...0,75 mm²	+
H05VV-F 2...5 x 0,75..2,5 mm²	+
H05VVH2-F 2 X 0,75...1,0 mm²	+

Leitungsbauart *Type of cable*	Standardleitungen *General purpose cables*
Firmenzeichen *Trademark*	I-SHENG SGIS

Dieser Zeichengenehmigungs-Ausweis bildet eine Grundlage für die EG-Konformitätserklärung und CE-Kennzeichnung durch den Hersteller oder dessen Bevollmächtigten und bescheinigt die Konformität mit den grundlegenden Schutzanforderungen der **EG-Niederspannungsrichtlinie 2006/95/EG** mit ihren Änderungen.
*This Marks Approval is a basis for the EC Declaration of Conformity and the CE Marking by the manufacturer or his agent and proves the conformity with the essential safety requirements of the **EC Low-Voltage Directive 2006/95/EC** including amendments.*

VDE Prüf- und Zertifizierungsinstitut GmbH
VDE Testing and Certification Institute
Fachgebiet FG42
Section FG42

KING-CORD Confidential Proprietary

VDE Prüf- und Zertifizierungsinstitut
Zeichengenehmigung

Ausweis-Nr. / Certificate No. 40006070

Beiblatt / Supplement

Name und Sitz des Genehmigungs-Inhabers / *Name andregistered seat of the Certificate holder*
I-Sheng Electric Wire & Cable Co., Ltd., 52 Tin Hwu Road, Ta Hua Village, 33334 GWAI SAN, TAOYUAN HSIEN, TAIWAN

Aktenzeichen / *File ref.*
1276303-5140-0005 / 170954 / FG42 / HEG

letzte Änderung / *updated* 2012-10-12

Datum / *Date* 2003-04-25

Dieses Beiblatt ist Bestandteil des Zeichengenehmigungsausweises Nr. 40006070.
This supplement is part of the Certificate No. 40006070.

Starkstromleitungen für allgemeine Anwendungen
- Flexible Leitungen
mit thermoplastischer PVC-Isolierung
Cables for general applications
- Flexible cables with
thermoplastic PVC insulation

Fertigungsstätte(n)
Place(s) of manufacture

Referenz/*Reference*	
30006550	I-Sheng Mfg (Song Gang) Factory Tang Xiayong Road Songgang Town 518105 BAOAN AREA, SHENZHEN Guangdong CHINA

VDE Prüf- und Zertifizierungsinstitut GmbH
VDE Testing and Certification Institute
Fachgebiet FG42
Section FG42

KING-CORD
Confidential Proprietary

VDE Prüf- und Zertifizierungsinstitut
Zeichengenehmigung

Ausweis-Nr. / Certificate No. 40006070

Infoblatt / Info sheet

Name und Sitz des Genehmigungs-Inhabers / *Name andregistered seat of the Certificate holder*
I-Sheng Electric Wire & Cable Co., Ltd., 52 Tin Hwu Road, Ta Hua Village, 33334 GWAI SAN, TAOYUAN HSIEN, TAIWAN

Aktenzeichen / *File ref.*	letzte Änderung / *updated*	Datum / *Date*
1276303-5140-0005 / 170954 / FG42 / HEG	2012-10-12	2003-04-25

Dieses Blatt gilt nur in Verbindung mit Blatt 1 des Zeichengenehmigungsausweises Nr. 40006070
This supplement is only valid in conjunction with page 1 of the Certificate No. 40006070.

Genehmigung zum Benutzen des auf Seite 1 abgebildeten markenrechtlich geschützten Zeichens des VDE:

Grundlage für die Benutzung sind die Allgemeinen Geschäftsbedingungen (AGB) der VDE Prüf- und Zertifizierungsinstitut GmbH (www.vde.com\AGB-Institut). Das Recht zur Benutzung erstreckt sich nur auf die bezeichnete Firma mit den genannten Fertigungsstätten und die oben aufgeführten Produkte mit den zugeordneten Bezeichnungen. Die Fertigungsstätte muss so eingerichtet sein, dass eine gleichmäßige Herstellung der geprüften und zertifizierten Ausführung gewährleistet ist.
Die Genehmigung ist so lange gültig wie die VDE-Bestimmungen gelten, die der Zertifizierung zugrunde gelegen haben, sofern sie nicht auf Grund anderer Bedingungen aus der VDE Prüf- und Zertifizierungsordnung (PM102) zurückgezogen werden muss.
Der Gültigkeitszeitraum einer VDE-GS-Zeichengenehmigung kann auf Antrag verlängert werden. Bei gesetzlichen und / oder normativen Änderungen kann die VDE-GS-Zeichengenehmigung ihre Gültigkeit zu einem früheren als dem angegebenen Datum verlieren.
Produkte, die das Biozid Dimethylfumarat (DMF) enthalten, dürfen gemäß der Kommissionsentscheidung 2009/251/EG nicht mehr in den Verkehr gebracht oder auf dem Markt bereitgestellt werden.
Der VDE-Zeichengenehmigungsausweis wird ausschließlich auf der ersten Seite unterzeichnet.

Approval to use the legally protected Mark of the VDE as shown on the first page:
Basis for the use are the general terms and conditions of the VDE Testing and Certification Institute (www.vde.com\terms-institute). The right to use the mark is granted only to the mentioned company with the named places of manufacture and the listed products with the related type references. The place of manufacture shall be equipped in a way that a constant manufacturing of the certified construction is assured.
The approval is valid as long as the VDE specifications are in force, on which the certification is based on, unless it is withdrawn according to the VDE Testing and Certification Procedure (PM102E).
The validity period of a VDE-GS-Mark Approval may be prolonged on request. In case of changes in legal and / or normative requirements, the validity period of a VDE-GS-Mark Approval may be shortened.
Products containing the biocide dimethylfumarate (DMF) may not be marketed or made available on the EC market according to the Commission Decision 2009/251/EC.
The approval is solely signed on the first page.

KING-CORD Confidential Proprietary

CERTIFICATE

OF SAFETY FOR ELECTRICAL APPLIANCES

Certification Number	: **SU01015-4001**	**Ref. No.** : 04-1920-1030
Manufacturer's Name & Address	: I-Sheng Manufacturing (Songgang) Factory Tang Xia Young Road, Song Gang Town, Bao An Area, Shenzhen, China	
Factory Name & Address	: Same as Manufacturer's	
Certified Product	**1. Product**	: PVC Sheathed Flexible Cables
	2. Basic Model	: 227 IEC 53(H05VV-F) 3Gx2.5㎟
	3. Rating	: 227 IEC 53 3Gx2.5㎟
	4. Derivative Model	: See the attachment1
Applied Standard	: K60227-5, K60227-1, K60227-2	
Attached Supplement	: 1. General Description of Certified Products	

This is to certify that the product shown above is complied with the safety standards under the Electrical Appliance Safety Control Law, paragraph 2 of Article 5 and is manufactured by a scheme that follows continuous obligations of safety. The product listed above is eligible to bear the Korean Safety Mark.

Date of Issue: June. 24. 2004.

CERTIFICATION BODY
KOREA TESTING LABORATORY

Seon-Beom Heo / Certification Director

222-13 GURO-DONG, GURO-GU, SEOUL, KOREA Tel:+82-2-8681-114 Fax:+82-2-8681-456

KTL
Korea Testing Laboratory

안전인증번호: SU01015-4001
Certification No.

□ 별첨1 : 파생모델 구분 및 제품특기사항
General description of Certified Products

파생모델명 Derivative model	기본모델과의 차이점 Differences between the basic and derivative model(s)
227 IEC 53 (H05VV-F) 3Gx0.75㎟	Nominal cross-sectional areas of minor models are different compared with basic model
227 IEC 53 (H05VV-F) 3Gx1.0㎟	
227 IEC 53 (H05VV-F) 3Gx1.5㎟	
227 IEC 53 (H05VV-F) 2Gx0.75㎟	Nominal cross-sectional areas and number of conductors of minor models are different compared with basic model
227 IEC 53 (H05VV-F) 2Gx1.0㎟	
227 IEC 53 (H05VV-F) 2Gx1.5㎟	
227 IEC 53 (H05VV-F) 2Gx2.5㎟	
227 IEC 53 (H05VVH2-F) 2Gx0.75㎟	Nominal cross-sectional areas and number of conductors of minor models are different compared with basic model. (Flat type)
227 IEC 53 (H05VVH2-F) 2Gx1.0㎟	

제품특기사항 및 시험조건
Remarks & Test conditions

1. Test Report No. : 04-1920-1030 (2004.06.15)

2. Product Description

- 60227 IEC 53(H05VV-F 3Gx2.5㎟),
  Black sheath, round, PVC/D(Insulation), PVC/ST5(Sheath)
- 60227 IEC 53(H05VVH2-F 2Gx0.75㎟),
  Black sheath, Flat, PVC/D(Insulation), PVC/ST5(Sheath)

□ 본 제품의 시험내용에 관하여 문의하실 사항이 있으시면 아래 연락처로 문의하시기 바랍니다.
시험담당자 : 전기전자본부 신뢰성평가팀 강 호 우 / (02)8601-415

□ *If you have any question on product testing, please contact the person below :*
Job holder : Electrotechnical Center Reliability Assessment Team, H.W.KANG/+82 2 8601-415

No.	Items	Conditions for Test測試條件	Specification判定規格
1	Insulation Resistance 絕緣阻抗 (IEC884 C17 OR IEC320 C15)	A quantity of No.7 lead drop shot is to be placed in a container,Apply a voltage of 500V DC for 1 min. at an ambient temperature of 25±5 ,between: A)Live parts of opposite polarity B)Live parts and ground or contact with ground afer which the measurement shall be made. Show below as: Megohmmeter 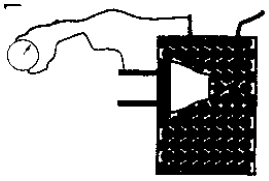	5M or more
2	Dielectric Strength 電氣強度 (IEC884 C17 OR IEC320 C15)	The test potential is to be supplied from a 500VA or large capacity testing transformer,and be increased from zero until 2000V(in fact,required 1250V) is reached,then held at the voltage for 1min.Current leakage 2mA. A)Live parts of opposite polarity B)Live parts and ground or contact with ground C)Between conductor and outside body Frequency:50/60Hz 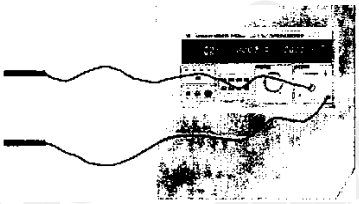	Without breakdown or flashover
	Moisture Resistance (IEC884 C16.3 OR IEC320 C14)	The humidity cabinet can be used. Relative humidity:91%-95% Temperature: 20-30 The specimens are kept in the cabinet for -168h(7 days) for connector with earthing contact,and for appliance inlets with earthing accessories,not incorporated in other equipment -48h(2 days) in all other cases.	After this treament, the specimen shall be withstand dieletric strength
	Temperature Rise 溫升測試 (IEC884 C19 OR IEC320 C21)	Test current:1.25 times rated cur Test time for1h Contact show in below: 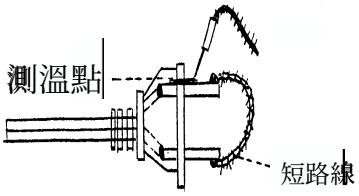	The temperature rise of the terminals and contact is no more than 45K
	Contact Resistance 接觸阻抗 (IEC884 C11.5)	Insert the cord connector straight into the receptacle, measurement shall be made between the connector and the receptacle only.Test current :1A DC. Ambient temperature :25±5.Insert the cord connector into the receptacle as shown below ,and measure the contact resistance by the voltage drop method. 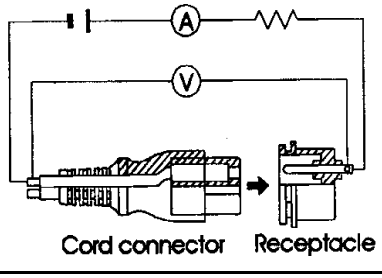	No more than 50m

Confidential Proprietary

<table>
<tr><th>No.</th><th>Items項目</th><th>Conditions for Test測試條件</th><th>Specification判定規格</th></tr>
<tr>
<td>6</td>
<td>Withdraw Force
拔插力
(IEC320 C16)</td>
<td>Withdraw the connector straight into the standard guage (mating plug),First The connector is inserted to the full depth into and withdraw from the appropriate appliance inlet 10 times,It is then again inserted for a principal mass is such that it exerts a force equal specified in the table .Verification of the minimum withdraw force is applied to each connector,the total mass of pplicable force as show
<table>
<tr><th rowspan="2">Type</th><th colspan="3">Withdraw force N(Kg)</th></tr>
<tr><th colspan="2">Multi-Pin guage</th><th>Single-Pin guage</th></tr>
<tr><th></th><th>Maximum</th><th>Minimum</th><th>Minimum</th></tr>
<tr><td>0.2A~2.5A</td><td>50(5.1)</td><td>13(1.3)</td><td>1.5(0.15)</td></tr>
<tr><td>>2.5A~6A</td><td>50(5.1)</td><td>13(1.3)</td><td>1.5(0.15)</td></tr>
<tr><td>>6A~10A</td><td>50(5.1)</td><td>13(1.3)</td><td>1.5(0.15)</td></tr>
<tr><td>>10A~16A</td><td>60(6.1)</td><td>15(1.5)</td><td>2.0(0.20)</td></tr>
<tr><td>>16A~32A</td><td>80(8.1)</td><td>30(3.1)</td><td>3.0(0.3)</td></tr>
</table>
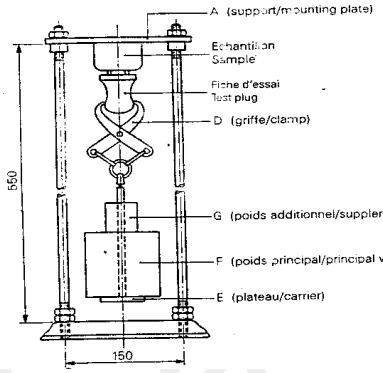

</td>
<td>During the verification of the maximum withdraw force test,The principal mass is hung on the connector without jolting and the supplementary mass is allowed to fall from a height of 5cm on to the principal mass,the connector shall not remain in the appliance After verification of the minimum withdraw force test,the gauge shall be not removed 0.079inch(2mm).During the single-pin gauge test,the gauge shall not fall from the contact assembly without 3sec.</td>
</tr>
<tr>
<td>7</td>
<td>Flexing Test
彎曲測試
(IEC884 C23.4 OR IEC320 C22.4)</td>
<td>A molded-on attachment plug and cord connector shall be capable withstanding the test specified as show in the table: molded to 20inch(508mm) lengths of flexible cord is required,and each cord approximately 12 inches(305mm) from the point of rotation to the weight,see fig 94.1
<table>
<tr><th>Cord type (mm²)</th><th>Load weight (g)</th><th>Angle (°)</th><th>Frequency (turns)</th><th>Flexing No. for connector (turms)</th><th>Flexing No. for plug</th></tr>
<tr><td>other</td><td>10N(1020g)</td><td>45°</td><td>60r/min</td><td>20000</td><td>10000</td></tr>
<tr><td>>0.75</td><td>20N(2040g)</td><td>45°</td><td>60r/min</td><td>20000</td><td>10000</td></tr>
</table>
A sample shall be secured to the flexing apparatus as below:
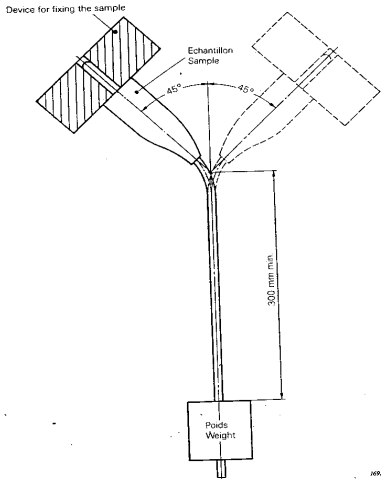

</td>
<td>After the test the sample
shall be no damage or breakage</td>
</tr>
</table>

<table>
<tr><th>No.</th><th>Items項目</th><th>Conditions for Test測試條件</th><th>Specification判定規格</th></tr>
<tr><td>8</td><td>Heat Pressure Test
球壓測試
(IEC884 C25.2 OR IEC320 C24.1)</td><td>A ball pressure test is made in a heating cabinet at a temperature of 125±2℃ and applied a steel ball of 5mm diameter against this sample surface with a force of 20N.after 1 hour,the tested ample
is cooled down within 10 seconds.see as following fig.:
 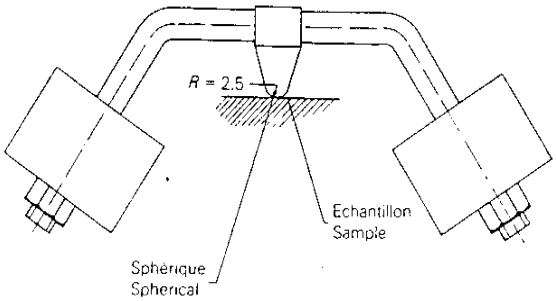
</td><td>the diameter of the impression caused by the ball shall not exceed 2 mm</td></tr>
<tr><td>9</td><td>Anchorage Test
錨錠測試
(IEC884 C23.2 OR IEC320 C22.3)</td><td>A sample is placed in the test apparatus(as below) so that the axis of the flexible cable is vertical where it enters the sample.The flexible cable is then subjected to show in the table:
<table><tr><th>Rating</th><th>Pull</th></tr><tr><td>I<=2.5A</td><td>50</td></tr><tr><td>2.5A<I<16A U<250V</td><td>60</td></tr><tr><td>I<16A U>250V</td><td>80</td></tr><tr><td>I>16A</td><td>100</td></tr></table>
Immediately afterwards, the flexible cable is subjected for
<table><tr><th rowspan="2">Rating of plug or portable socket-outlet</th><th colspan="5">Flexible cable (number of cores x cross-section in mm²)</th></tr><tr><th>2 x 0,5</th><th>2 x 0,75</th><th>3 x 0,5</th><th>3 x 0,75</th><th>(2 or more) x 1</th></tr><tr><td>Up to and including 16 A and 250 V</td><td>0,1 Nm</td><td>0,15 Nm</td><td>0,15 Nm</td><td>0,25 Nm</td><td>0,25 Nm</td></tr><tr><td>16A and above 250 V</td><td>-</td><td>-</td><td>-</td><td>-</td><td>0,35 Nm</td></tr><tr><td>Above 16 A</td><td>-</td><td>-</td><td>-</td><td>-</td><td>0,425 Nm</td></tr></table>
 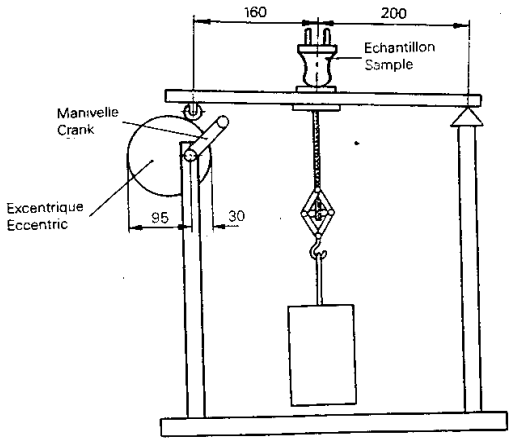
</td><td>After the test,the flexible shall not have been displaced by more than 2mm,or no break.</td></tr>
</table>
Confidential Proprietary

No.	Items項目	Conditions for Test測試條件	Specification判定規格
10	Breaking Capacity 分斷容量 (IEC320 C19)	The connector and appliance inlet are connected and disconnected 50 times (100 strokes) at a rate of 30 strokes per minute.the length of a stroke of the test apparatus is between 50mm and 60mm, The periods during which the test current is passed from the connection to the subsequent disconnection of the accessories are 1.5(+0.5,-0)s,The test voltage is 275V,the test current is 1.25 times rated current and the power factor is at least 0.95 for 10A and 16A connectors and 0.6±0.05 for other connectors. 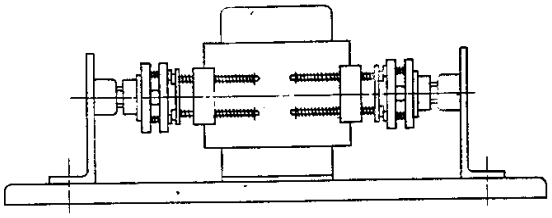 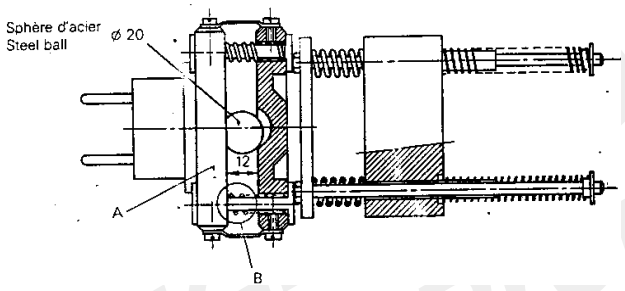	The specimen shall show no damage impairing its further use and the entry holes for the pin shall not show any serious damage
11	Tumbling Barrel Test 滾桶測試 (IEC884 C24.2)	A sample is tested by 10 falls per minute in a tumbling barrel as shown below. The flexible cable shall be cut for a free length of about 100mm from the accessory. The number of falls shown in the table; Weight / Numbers <100g / 1000 >100g / 500 >200g / 100 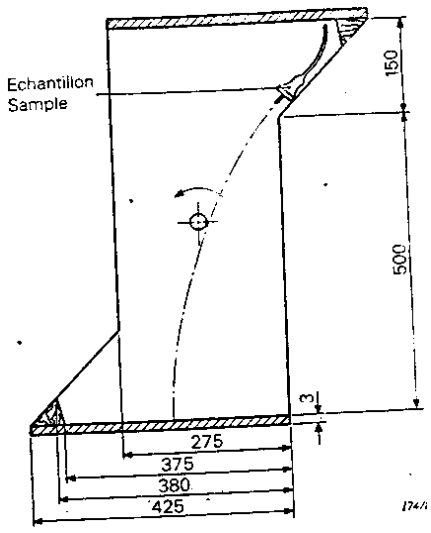	After the test,no part detached or loosened,the pin shall not turn when a torque of 0.4Nm is applied,first in one direction for 1 min and then in the opposite direction for 1 min.

Confidential Proprietary

No.	Items項目	Conditions for Test測試條件	Specification判定規格
12	Low Temperature Impact 低溫撞擊測試 (IEC884 C24.4)	The specimen is subjected to an impact test by mean of an apparatus shown in below.At a temperature of -15±2℃ for at least 16h.The falling weight of 1000±2g is allowed to fall from a height of 100 mm. 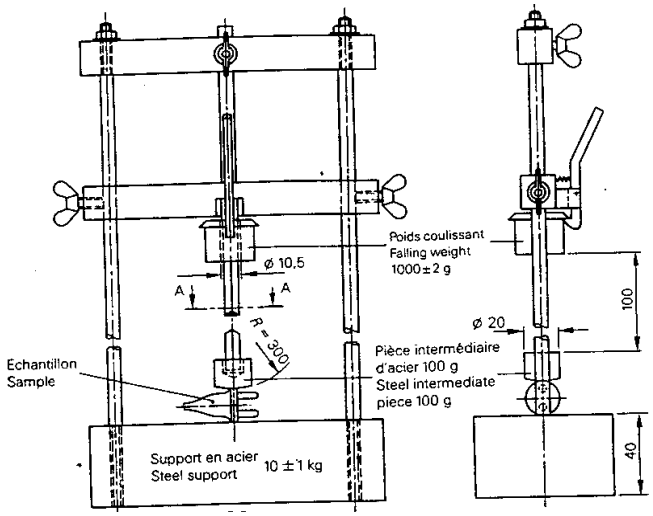 	No damage within the meaning of the standard
13	Resistance to Aging 老化試驗 (IEC884 C16.1)	The temperature in the cabinet is 70±2℃.The specimen is kept in the cabinet for 7 days (168h). After the treatment, the specimen is kept at a room temperature and relative humidity between 45%-55% for least 4 days (96h).after,the specimen shall show no crack visible with normal or corrected vision. A forefinger wrapped in a dry piece of rough cloth is pressed on the specimen with a force of 5N. No traces of the cloth shall remain on the specimen and the	After the test,the specimen shll show no damage which would lead to non-compliance with the standard
14	Compression Test 壓迫試驗 (IEC884 C24.5)	A specimen is pressed between two flat surfaces with a force of 150N for 5 min,as shown in fig. After 15 min,remove from the test apparatus and check it.A specimen is subjected to a compression test in the nanner as shown in below,the temperature of the pressure plate :23±2℃. Applied force :300N The specimen is placed in each position as shown in fig. for 1 min and shall be checked,15 min after the removal from the test apparatus. 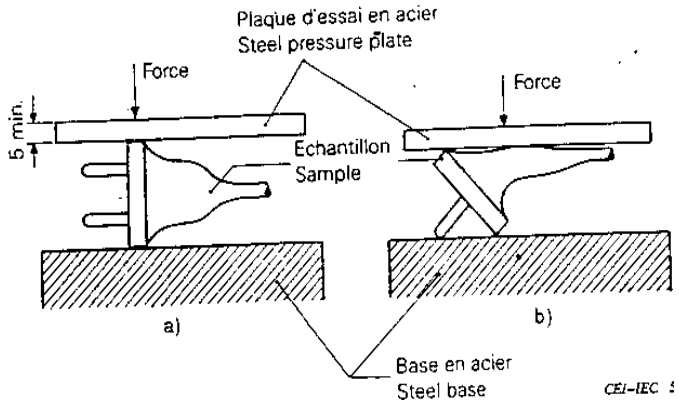 	No damage within the meaning of the standard

Confidential Proprietary

접 수 번 호 (Receipt No.) : 17-009397-01

안 전 인 증 서

Safety Certificate

안 전 인 증 번 호 (Certificate No.) : SU01149-17001

제 조 업 자/수 입 업 자 명 (Manufacturer/importer) : KING-CORD ELECTRONIC CO., LTD. SHENZHEN CHINA

주 소 (Address) : No.B2, The West Industry Park of Tan Tou, Song Gang Town, Bao An Distr ict, Shen Zhen City, Guang Dong Province, China

제 품 명 (Product) : 코드세트(Cord set)

기 본 모 델 명 (Basic Model) : KC-024/KC-003

파 생 모 델 명 (Series Model) : KC-022/KC-003

정격/안전기준상의 모델구분 (Rating) : 250 VAC 10 A

시 험 기 준 (Standard) : KC60799(2015-09)

본 인증서는 제 조 국 명 : 중국
제 조 업 자 명 : KING-CORD ELECTRONIC CO., LTD. SHENZHEN CHINA
제조공장의 주소 : No.B2, The West Industry Park of TanTou, Song Gang Town, BaoAn District, ShenZhen City, GuangDong Province, China
의 제품에만 해당함

「전기용품 및 생활용품 안전관리법 시행규칙」 제9조제2항 · 제4항 또는 제10조제2항에 따라 안전인증서를 발급합니다.

We Issue This Safety Certificate for the above appliances in accordance with the Article 9(2),9(4) or10 (2) of the Enforcement Rule of the Electrical Appliances and Consumer Products Fafety Control Act.

2017 년 (Year) 03 월 (month) 23 일 (day)

한국산업기술시험원장
KOREA TESTING LABORATORY

※ 이 인증서는 「전기용품 및 생활용품 안전관리법 시행규칙」에 따른 제품의 안전성 확인에 한정된 것이며, 그 밖의 다른 법률이 적용되는 제품의 경우에는 해당 법률에 따라 추가로 인증 · 허가 등을 받아야 합니다.

첨부서류	1. 전기용품의 안전관리부품 및 재질목록(List of Critical Components) 2. 기본모델 · 파생모델의 내용 (Descriptions of the basic and series model) 3. 안전인증의 변경 현황 (Revisions Status)

Korea Testing Laboratory

안전인증번호: SU01149-17001
Certification No.

☐ 첨부 1 : 전기용품의 안전관리부품 및 재질목록
List of Critical Components

부품명(회로기호) Component(Part no.)	제조자(상표명) Manufacturer(Brand)	모델명(형식) Model(Type)	정격 또는 특성 Rating or Characteristics	인증마크 Tested by
Plug	King-Cord	KC-024 KC-022	16 A 250 VAC	KC
Power Cord	I-Sheng	60227 IEC 53 (H05VV-F)	3 x 0.75 ㎟ 3 x 1.0 ㎟ 3 x 1.5 ㎟	KC
Connector	King-Cord	KC-003	10 A 250 VAC	KC

☐ 유의사항 (Attention) :

1. 안전관리부품은 전기적인 안전에 직접적인 영향을 주는 부품으로서 안전인증기관이 정기공장검사 시 확인 관리 하는 사항입니다. 따라서 상기목록에 기재된 사항을 변경하거나 또는 복수등재를 원하시는 경우는 안전인증기관에 인증변경신청을 하여야 합니다.

   As the "Critical components" are parts in directly related with safety, these components shall be checked during a factory inspection by the certification body. In case of applying multiful listing or changing the items above, the certification revision shall be applied.

2. 인증변경신청 없이 임의로 변경하는 경우는, 전기용품 및 생활용품 안전관리법 시행규칙 제 20 조제 1 항 또는 제 36 조제 1 항 규정에 의한 안전인증 취소 혹은 안전확인신고 효력상실 사유가 됨을 유의하시기 바랍니다.

   The Safety Certification will be cancelled under the Article 20(1), 36(1) of the Enforcement Rule of the Electrical appliances and Consumer Products Safety Control Act if the contents of the Certification is altered without our authorization.

FP511-10-01

□ 첨부 2 : 기본모델 · 파생모델의 내용
Description of the basic and series model

파생모델명 Derivative model	기본모델과의 차이점 Differences between the basic and derivative model(s)
KC-022/KC-003	Plug [KC-022] is side entry type.

제품특기사항 및 시험조건 Remarks & Test conditions
1. Test Report No. : 17-009397-01 (2017.03.22.) 2. Product Description : - 10 A 250 VAC cord set - This plug is combined with cord - Plug figure and dimension is illustrated on the "sheet 5 e) 16 A 250 V~" of KSC8305 standard - Connector figure and dimension is illustrated on the "standard sheet C13" of K60320-1 Standard.

□ 본 제품의 시험내용에 관하여 문의하실 사항이 있으시면 아래 연락처로 문의하시기 바랍니다.
시험담당자 : 인증산업본부 전기부품평가센터 임 화준 / (055) 791-3431
□ *If you have any question on product testing, please contact the person below :*
Job holder : Certification Business Division, Electrical Components Testing Center, H.J Rim /+82 55-791-3431

FP511-09-00

□ 첨부 3 : 안전인증의 변경 현황
Revisions Status

변경발급 내용 Contents of Certificate Revisions
Not applicable

FP511-11-00

□ 첨부 : 제품사진
Photographs

