RoHS Compliant

Revision	Modify Record	Date
A/0	作 圖	08/14/2024

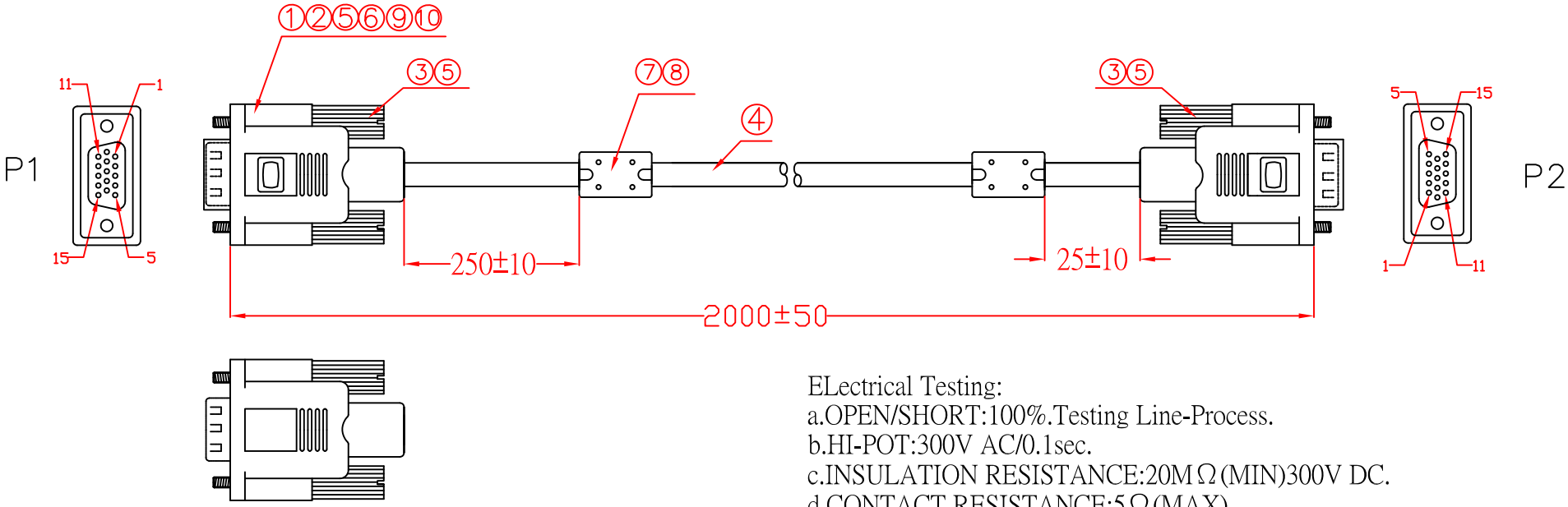

ELectrical Testing:
a.OPEN/SHORT:100%.Testing Line-Process.
b.HI-POT:300V AC/0.1sec.
c.INSULATION RESISTANCE:20MΩ(MIN)300V DC.
d.CONTACT RESISTANCE:5Ω(MAX)

P1		P2
1	RED COAXIAL INNER	1
2	GREEN COAXIAL INNER	2
3	BLUE COAXIAL INNER	3
12	BLACK	12
13	BROWN	13
14	RED	14
15	ORANGE	15
4+5+6+7+8+10+11+SHELL	3COAXIAL SHIELD+BRAID SHIELD	4+5+6+7+8+10+11+SHELL

No.	Part No.	Q'ty	Units	Specification
10	51-3620-01	28	PCS	HDB15P 公端子半金鎳1U"(TR-HD00CPS00)
9	3620-JP-1501	2	PCS	HDB15P 黑膠公頭,鐵殼前鎳后錫(HD-15CP-K0-N000)
8	89-1001-0050	20	g	MOLDED PVC 50% COLOR: BLACK
7	75-1407-0285-1	2	PCS	CORE 7.0(內)*14.2(外)*28.5(長)MM
6	10-3028-2001	14	PCS	UL1061 28# BLACK L:40MM
5	89-1007-0030	10	g	MOLDED PVC 30% COLOR: BLUE
4	15-0930-010200	1	PCS	UL20276(1C*30AWG+S)*3C+6C*28AWG+AL+D+B(16*8/0.10TA) OD:5.9MM BLACK L:2M
3	88-2401-38-2	4	PCS	4-40UNC SCREW ø2.5*ø2.3*36MM
2	89-0000-0000	10	g	INNER MOLDED PE
1	90-3617-0015	2	PCS	HDB方形藍色護套

JAWS® 兆鈺科技有限公司
JAWS ELECTRONIC CO., LTD.
地址:臺灣省臺北縣汐止市大同路二段171號3樓之3
TEL:886-02-86926686 FAX:886-02-86926343 Web:www.jawsstech.com

Quality Symbols: ■ RoHS Compliant □ UL Approved

This drawing may not be copied or reproduced in any way,and may not be passed on to a third party without written permission.
Part-ownership and part-copyright of JAWS

Description	VGA to VGA cable 2M		
Customer Name	Yu Wei	Drawing No.	20240807
Customer No.	3KH00000870	Designed By	Liliqiong
Produce No.	24-220-E002	Approved By	
Date	08/14/2024	Scale	Not to scale

Third Angle Projection

Units: ■ MM □ Inch

Size: A4

RoHS Compliant

Revision	Modify Record	Date
A/0	作 圖	08/14/2024

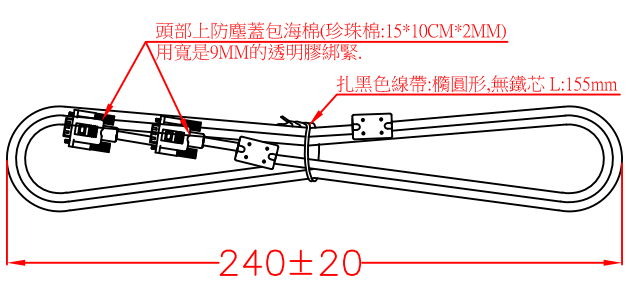

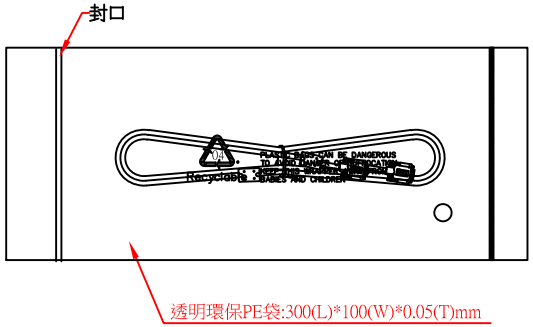

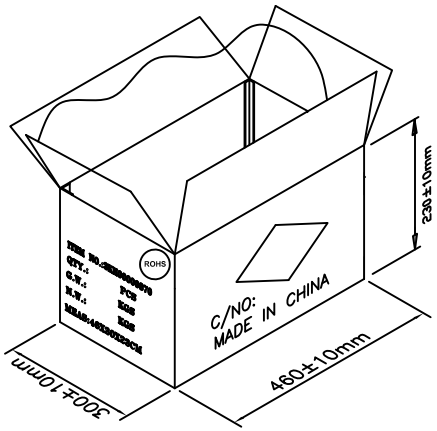

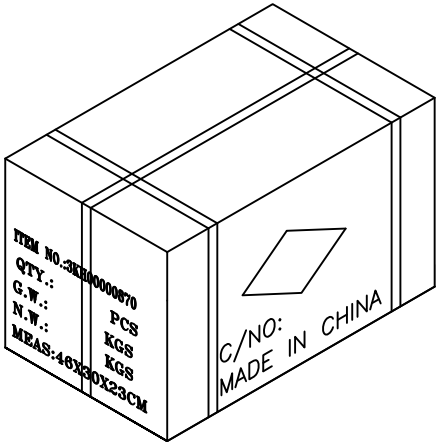

包裝要求:

1. 產品要求擦拭干淨,裝入防水袋中,單PCS包裝.
2. 正側嘜要求按生產派單要求填寫.

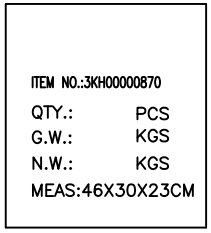

側嘜

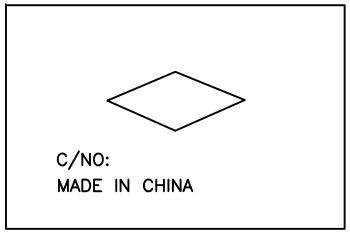

正嘜

No.	Part No.	Q'ty	Units	Specification
4	99-030004428		PCS	PASTEBOARD: 440(L)*280(W)MM(A=A)
3	98-050463055		PCS	PE BAG: 460(L)*300(W)*550(H)*0.08(T)MM
2	98-040051030	1	PCS	PE BAG:300(L)*100(W)*0.05(T)MM(需打排氣孔,有印環保標示)
1	99-010463023S		PCS	CARTON: 460(L)*300(W)*230(H)mm

JAWS® 兆鈺科技有限公司
JAWS ELECTRONIC CO., LTD.
地址:臺灣省臺北縣汐止市大同路二段171號3樓之3
TEL:886-02-86926686 FAX:886-02-86926343 Web:www.jawsstech.com

Quality Symbols: ■ RoHS Compliant ☐ UL Approved

This drawing may not be copied or reproduced in any way,and may not be passed on to a third party without written permission.
Part-ownership and part-copyright of JAWS

Description	VGA to VGA cable 2M		
Customer Name	Yu Wei	Drawing No.	20240807
Customer No.	3KH00000870	Designed By	Liliqiong
Produce No.	24-220-E002	Approved By	
Date	08/14/2024	Scale	Not to scale

Third Angle Projection

Units: ■ MM ☐ Inch

Size: A4