东莞市广业电子有限公司

Dongguan City Guang Ye Electronic Co.,Ltd.

TO:

Approval Sheet

客户	佳世达	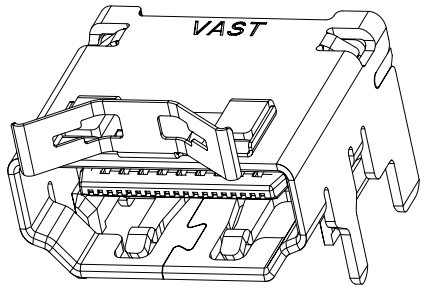
客户料号		
广业料号	**161012182**	
品名	**HDMI SOCKET R/A SMT 19PIN**	
日期	**2024-07-22**	

Approval

CUSTOMER	**Prepare**	**Review**	**Approval**
PREPARE	**Prepare**	**Review**	**Approval**
	赖丽丽	雷鹏	殷旺

Company: 广业电子有限公司
Address: 东莞市虎门镇南栅第五工业区南泰路 1 巷 2 号
TEL: 0769-38933333 **FAX:0769-38932500**
Http://www.vast.hk

廣業電子 VAST ELECTRONICS

文件制定&修改履历表

版本	日期	制定/修改/废止内容	制定	核准
A	2024-7-22	首次承认	赖丽丽	殷旺

--目录--

1.封面----------

2.目录----------

3.图面----------

4.零件检验表----------

5.规格书----------

6.包装图----------

7.测试报告----------

保密等级: ☐ 绝密 ■ 保密 ☐ 普通

REV.	EC#	DESCRIPTION	DATE	DRAWING	CHECKED	APPROVED
A1	ECN-160032	NEW RELEASE	2016.01.19	LEIPENG	YINWANG	NICO.LI
A2	ECN-160078	更正包规&载带增加加强筋 A2 *3	2016.02.26	LEIPENG	YINWANG	NICO.LI

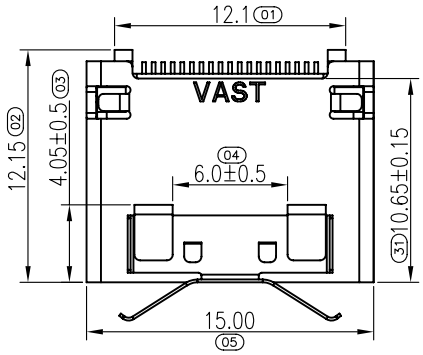

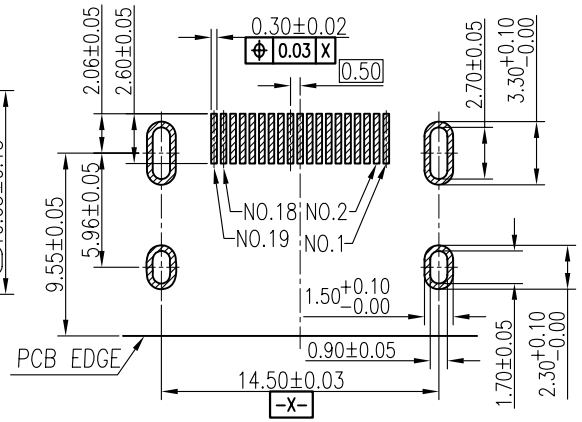

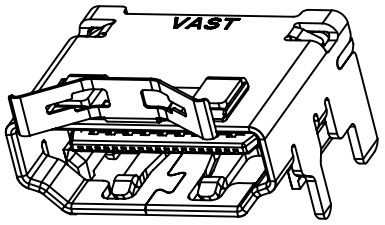

RECOMMENDED PCB LAYOUT (T=1.60)

TOLERANCES UNLESS OTHERWISE SPEC. ±0.05

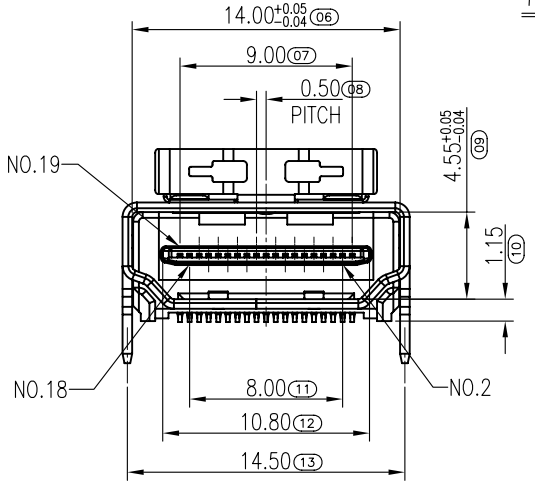

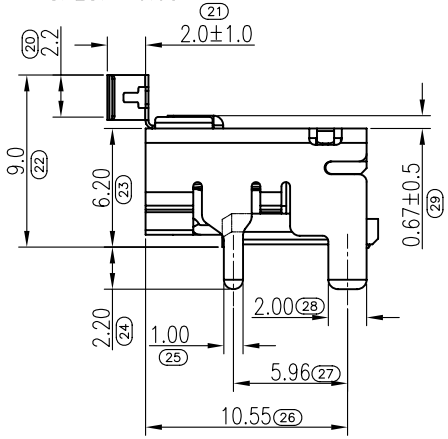

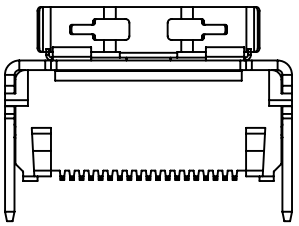

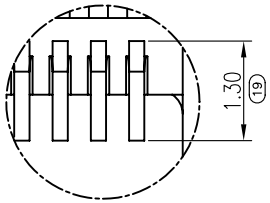

DETAIL A

SCALE 4:1

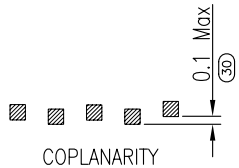

COPLANARITY

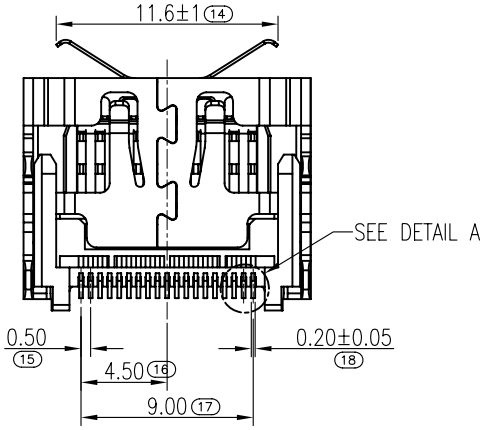

NOTE:

1. MATERIAL:
   - 1-1 PLASTIC: HIGH TEMPERATURE PLASTIC UL94V-0,COLOR:BLACK
   - 1-2 CONTACT: COPPER ALLOY
   - 1-3 SHELL: COPPER ALLOY
   - 1-4 SHRAPNEL:STAINLESS
2. PLATING :
   - TERMINAL:
     - CONTACT AREA: GOLD FLASH PLATING.
     - SOLDER AREA: MATTE TIN ALLOY PLATED.
     - UNDER PLATE: NICKEL PLATING.
   - SHELL:NICKEL PLATED OVERALL .
3. MECHANICAL
   - INSERTION FORCE: 4.5kgf MAX
   - WITHDRAWAL FORCE: 1.0~4.0kgf
4. ELECTRICAL:
   - LOW LEVEL CONTACT RESISTANCE:
     - CONTACT: 30 MILLIOHMS MAX
     - SHELL: 50 MILLIOHMS MAX
   - DIELECTRIC WITHSTANDING VOLTAGE: 500V AC
   - INSULATION RESISTANCE:
     - 100 MEGAOHMS MIN AT 500V AC(UNMATED)
     - 10 MEGAOHMS MIN AT 150V DC(MATED)
5. ENVIRONMENTAL
   - TEMPERATRUE RANGE: -25°C TO +85°C.
6. PART MUST COMPLY ROHS SPECIFICATION

RoHS

H F

MILLIMETERS	INCH
X.° ± 2°	X.° ± 2°
.X ±0.30	.XX ±0.012
.XX ±0.20	.XXX ±0.008
.XXX± 0.10	.XXXX± 0.004

THESE DRAWINGS AND SPECIFICATIONS ARE THE PROPERTY OF Guang Ye Electronics Group COPIED OR USED IN ANY MANNER WITHOUT THE PRIOR WRITTEN CONSENT OF Guang Ye Electronics Group

UNITS MM

MAT'L SEE NOTES

FINISH SEE NOTES

QTY SEE NOTES

Guang Ye Electronics Group

PART NUMBER: 161012182

TITLE: HDMI SOCKET R/A SMT 19PIN WITH SHRAPNEL,SHELL DIP, CUSTOMER DWG

APPD: NICO.LI

CHKD: YINWANG

DR: LEIPENG

DWG NO.: C-161012182-00

SCALE	SHEET	REV.
1:1	1/2	A2

Qisda

Component Test Report

Connector (2K / 2B.) 類零件檢驗表

Vendor	GUANGYE	Qisda P/N	2B.C0107.071	Test Date	2-Mar-16

測試項目 Test item	規格 Spec	Test Data					Result	Remark
		1	2	3	4	5	Pass / Fail	
1. 外觀	表面無裂痕及本體顏色與規格書一致	OK	OK	OK	OK	OK	Pass	
2. 零件本體(膠芯)顏色 Body color	Black	OK	OK	OK	OK	OK	Pass	

外觀尺寸圖

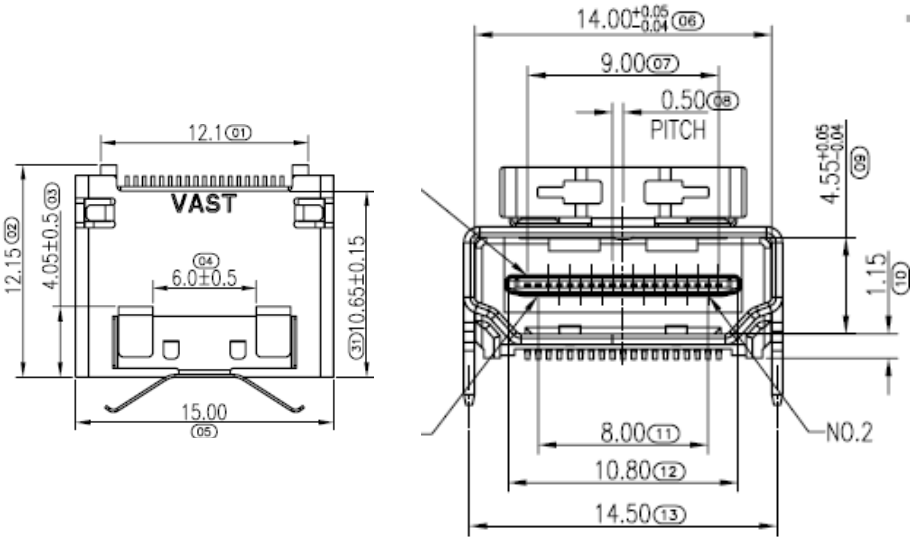

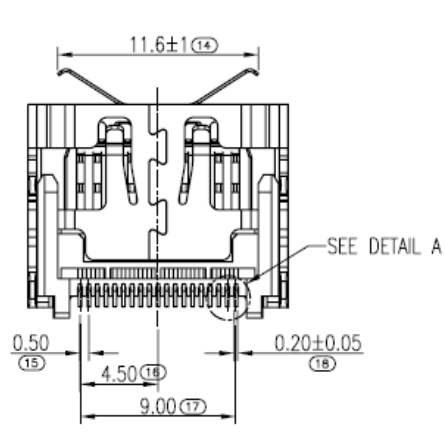

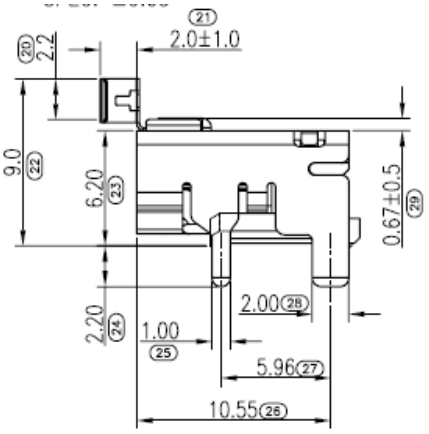

Dimension	Spec	Result
1	12.1±0.30	12.106
2	12.15±0.20	12.163
3	4.05±0.5	4.066
4	6.0±0.5	6.012
5	15.00±0.20	14.999
6	14.00+0.05/−0.04	14.023
7	9.00±0.20	8.991
8	0.50±0.20	0.492
9	4.55+0.05/−0.04	4.538
10	1.15±0.20	1.162
11	8.00±0.20	7.994
12	10.80±0.20	10.798
13	14.50±0.20	14.506
14	11.6±1	11.641
15	0.50±0.20	0.490
16	4.50±0.20	4.511
17	9.00±0.20	9.002
18	0.20±0.05	0.223
19	1.30±0.20	1.285
20	2.2±0.30	2.236
21	2.0±1.0	2.093
22	9.0±0.30	9.024
23	6.20±0.20	6.223
24	2.20±0.20	2.236
25	1.00±0.20	1.016
26	10.55±0.20	10.563
27	5.96±0.20	5.952
28	2.00±0.20	2.036
29	0.67±0.5	0.692
30	0.10MAX	0.023
31	10.65±0.15	10.663
Result	Pass	
Prepared By	賴丽丽	
Review By	殷旺	

實物照片與Spec圖片比對

Full side	Spec drawing
	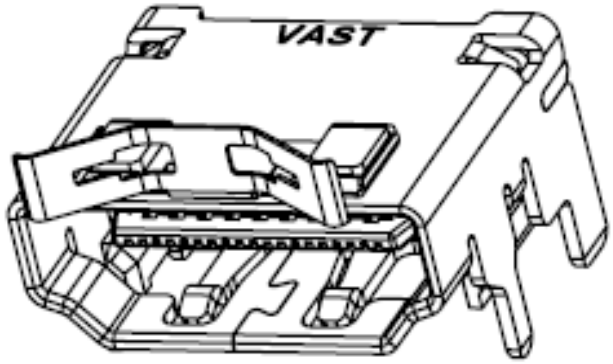
Top side	Spec drawing
	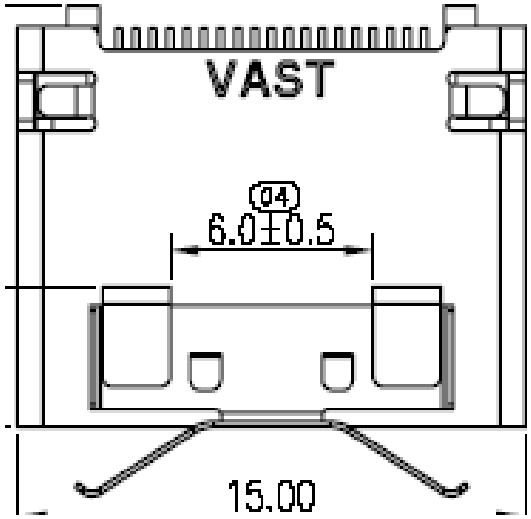
Rear side	Spec drawing
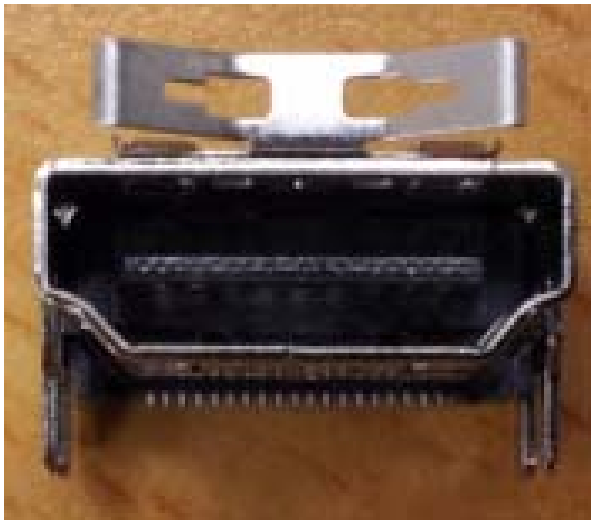	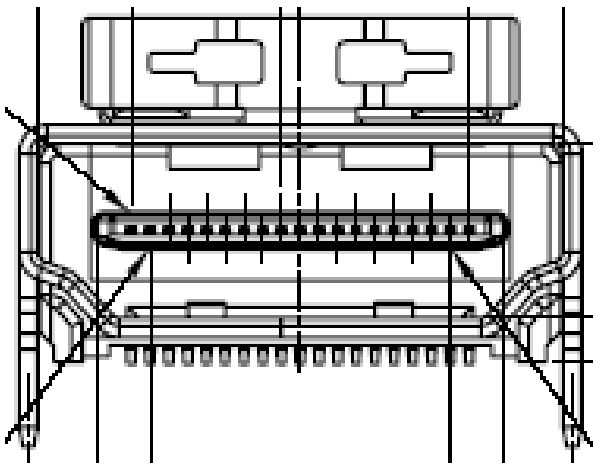

Result:	PASS	Prepared By:	賴丽丽	Review By:	殷旺

东莞市广业电子有限公司
Dongguan City GuangYe Electronic co.,Ltd

文件名称:	HDMI Connector Product Specification (Lead-free)						
文件编号:	CSP-HDMI-01			制定人：		陈信机	
版本版次：	B3	制定日期：	2013-07-06	页次：	1/8	适用范围	通用

1. Scope(范围)

1.1 Contents（内容）

This specification covers the performance, tests and quality requirements for the Guangye Electronics HDMI Connector.

（此份产品规格适用于广业电子 HDMI 连接器的产品功能，测试方法及质量要求）

2. Requirements（要求）:

2.1 Rating(额定条件)

A .Voltage rating (额定电压) ： 40V AC

B. Current rating (额定电流) ： 0.5A

C. Operation Temperature Range(操作温度范围)：-25℃ to +85 ℃.

3. Test Condition(测试条件):

3.1 Temperature range（温度范围）:+15℃ to +35℃

3.2 Humidity range（湿度范围）:25% to 85%

4 .Test Methods and Requirements: (测试方法及要求)

4.1 Examination of product (产品外观)

Test items		Test Conditions	Requirement
4.1.1	Examinatio Of Product 产品外观	Visual 目视	No peeling off the plating, deformation of the base or damage. 不得有电镀层剥落,塑料变形或破损
4.2.Electrical Performance (电气性能)			
4.2.1	Contact Resistance 接触阻抗	(EIA -364-06B) Mated connectors, Contact: measure by dry circuit, 20 mVolts maximum, 10 mA. Shell: measure by open circuit, 5 Volts maximum, 100 mA. 配对的连接器， 端子:测试端子在回路中施加直流最大 20mV 10 mA 的电流再测端子的电阻值 外壳:测试外壳在开路中施加直流最大 5V 100 mA 的电流再测外壳的电阻值	Initial Contact resistance Excluding conductor Resistance: 10 milliohms maximum. Change from initial value 30 mΩ maximum 接触电阻初始值最大不能超过 10 mΩ(初始接触阻抗不包含导体阻抗), 接触阻抗初始值最大不能超过30毫欧(含导体阻抗).
4.2.2	Dielectric Withstanding Voltage 耐电压	(EIA -364-20C) Unmated connectors, apply Type A/B/C/E：500V AC (RMS.) Type D：250V AC (RMS.) for 1 minute between adjacent terminal or ground. Mated connectors, apply Type A/B/C/E：300V AC (RMS.) Type D：150V AC (RMS.) for 1 minute between adjacent terminal or ground. 没有配对的连接器在相邻的端子或接地之间通电：Type A/B/C/E 500V，Type D 250V 的交流电压 1 分钟 配对的连接器在相邻的端子或接地之间通电：Type A/B/C/E 300V，Type D 150V 的交流电压 1 分钟	No Breakdown or flashover 不能有损坏或跳火花

4.2.3	Insulation Resistance 绝缘阻抗	(EIA 364-21C) Unmated connectors, apply 500 V DC between adjacent terminal or ground. Mated connectors, apply 150 V DC between adjacent terminal or ground. 没有配对的连接器在相邻的端子或接地之间通上 500V 的直流电压 1 分钟 配对的连接器在相邻的端子或接地之间通上 150V 的直流电压 1 分钟	100 MΩ min(unmated) 10 MΩ min(mated) 没有配对需大于 100 MΩ 配对需大于 10 MΩ	
4.3.Mechanical Performance (机械性能)				
4.3.1	Insertion/ Withdrawal force 插入力/拔出力	(EIA-364-13) Insertion and withdrawal speed: 25mm/minute. 插入和拔出的速度为 25mm/分	insertion force 插入力	44.1N MAX
			Withdrawal force 拔出力	Type A： 9.8N-39.2N Type C:7N-25N Type D:5N-25N and after 5,000 cycles mating, 3N-25N
4.3.2	Durability 寿命测试	(EIA -364-09) Measure contact and shell resistance after the Following. Automatic cycling:10000 cycles at 100±50 Cycles per hour. Type C and Type D: 5,000 cycles at 100 ± 50 cycles per hour 以每小时 100±50 的插拔次数测试 10000 次循环后量测端子和外壳的接触阻抗 Type C 和 Type D 以每小时 100±50 的插拔次数测试 5000 次循环后量测端子和外壳的接触阻抗	Contact Resistance 接触阻抗 Contact : Change from initial value: 30 milliohms maximum. Shell: Change from initial value: 50 milliohms maximum. 端子:从初始值开始变化量小于 30mΩ 外壳:从初始值开始变化量小于 50mΩ	

4.3.3	Terminal retention force 端子保持力	Apply axial pull out force on terminal in the housing at a rate of 25.4±3mm per minute 拉伸的速度应该在每分钟 25±3mm 之间	Minimum retention force 3.92N (0.4kgf)/PIN 端子保持力不小于 3.92N(0.4kgf)
4.3.4	Vibration 振动	(EIA-364-28 条件 3) Amplitude:1.52mm P-P or 147m/s² {15G} Sweep time:50-2000-50Hz in 20 minutes. Duration:12 times in each(total of 36 times)X, Y, Z, axes. Electrical load:DC100mA current shall be flowed during the test.(ANSI/EIA-364-28 Condition III) 在直流 100 毫安通电状态下测试，在 X，Y，Z 垂直 3 方向上，频率 50-2000-50 赫兹（加速度往复 20 分钟），全振幅 1.52mm P-P 或 147 m/ s² {15G}，每轴 12 回计 36 回	Appearance ： No Damage 外观：无损坏 Contact Resistance 接触阻抗 Contact：Change from initial value:30mΩMax. 端子：从初始值开始变化量小于 30 mΩ Shell Part: Change from initial value:50mΩMax. 外壳：从初始值开始变化量小于 50 mΩ Discontinuity：1 μsec Max. 间断性：不超过 1 微秒
4.3.5	Physical shock 物理冲击	(EIA-364-27 条件 A) Pusle width:11msec Waveform: Half-sine 490 m/ s²(50G)3 strokes in each X,Y ,Z axes. (ANSI/EIA-364-27 condition A) 周期：11msec 冲击波形：正弦半波 490 m/ s²(50G)3 循环在 X，Y，Z 轴	Appearance ： No Damage 外观：无损坏 Contact Resistance 接触阻抗 Contact：Change from initial value:30mΩMax. 端子：从初始值开始变化量小于 30 mΩ Shell Part: Change from initial value:50mΩMax. 外壳：从初始值开始变化量小于 50 mΩ Discontinuity：1 μsec Max. 间断性：不超过 1 微秒

4.4.Environmental Performance

4.4.1	Thermal shock test 冷热冲击	(EIA-364-32C Condition 1) 10 cycles of: a) -55±3°C for 30 minutes b) +85±3°C for 30 minutes 10个循环， a) -55±3°C 30 分钟 b) +85±3°C 30 分钟	Appearance : No Damage. 外观：没有损坏 Contact Resistance 接触阻抗 Contact : Change from initial value: 30 milliohms maximum. Shell: Change from initial value: 50 milliohms maximum. 端子:从初始值开始变化量小于30mΩ 外壳:从初始值开始变化量小于50mΩ
4.4.2	Solder ability 焊锡性	(EIA -364-52) To be sipped in the solder bath 235±5℃ Coverage for 3 seconds. 将焊锡脚浸在 235℃ ± 5℃的锡炉中<3 秒	The inspected area of each lead must have 90% solder coverage minimum 表面粘锡面积不少于 90%
4.4.3	Humidity 恒温恒湿	(EIA- 364-31B) (A) Mate connectors together and perform the test as follows 配对的连接器测试条件. Temperature: +25 to +85 ℃（温度：+25 to +85 ℃） Relative Humidity: 80 to 95%(相对湿度：80 to 95%), Duration: 4 cycles(96 hours) 时间：4 个循环共 96 小时 Upon completion of the test, specimens shall be conditioned at ambient room conditions for 24 hours, after which the specified measurements shall be performed. 实验完成后,样品放置于室温条件中 24 小时后再进行测试	Appearance : No Damage. 外观：没有损坏 Contact Resistance 接触阻抗 Contact : Change from initial value: 30 milliohms maximum. Shell: Change from initial value: 50 milliohms maximum. 端子:从初始值开始变化量小于30mΩ 外壳:从初始值开始变化量小于50mΩ
		(EIA- 364-31B) (B) Unmated each connectors and perform the test as follows. 没有配对的连接器测试条件. Temperature: +25 to +85℃（温度：+25 to +85 ℃） Relative Humidity: 80 to 95%(相对湿度：80 to 95%) Duration: 4 cycles(96 hours) 时间：4 个循环共 96 小时 Upon completion of the test, specimens shall be conditioned at ambient room conditions for 24 hours, after which the specified measurements shall be performed. 实验完成后,样品放置于室温条件中 24 小时后再进行测试	Appearance : No Damage. 外观：没有损坏 Conform to item of Dielectric Withstanding Voltage and Insulation Resistance. 符合耐电压及绝缘阻抗要求

4.4.4	Salt Spray 盐水喷雾	(EIA -364-26B) Temperature: 35+/-2 ℃ 温度: 35+/-2 ℃ Concentration for salt : 5% 盐水浓度: 5% (1)Duration: 48H 持续时间: 48 小时 Condition(条件): Contact plated gold more than 15u”(include 15u”),and the material of shell for copper alloy， or stainless . 端子镀金厚度大于等于 15u”且壳体材质是铜合金或是不锈钢. (2)Duration: 24H 持续时间: 24 小时 Condition: Contact plated gold less than 15u”,and/or the material of shell for steel. 端子镀金厚度小于 15u”且/或是壳体材质是铁材	No detrimental corrosion(Terminal solder tail unrequested) 产品无氧化,锈蚀(端子焊脚镀锡处不作要求) Contact Resistance 接触阻抗 Contact : Change from initial value: 30 milliohms maximum. Shell: Change from initial value: 50 milliohms maximum. 端子:从初始值开始变化量小于 30mΩ 外壳:从初始值开始变化量小于 50mΩ
4.4.5	Cold resistance (Unmated) 耐寒性	(JIS C 0020) Unmated connectors and expose to -40℃+/-3℃ for 250 hours. Upon completion of the exposure period, the test specimens shall be conditioned at ambient room conditions for 1 to 2 hours, after which the specified measurements shall be performed. 没配对的连接器放置于-40℃+/-3℃温度中 250 小时，当完成实验后，样品放置一般环境中 1 到 2 小时后，再进行测试	Contact resistance: 接触阻抗 Contact: change from initial value 30mΩMax. Shell: change from initial value 50mΩMax. Appearance: No damage. 端子：从初始值开始变化量小于 30 mΩ 外壳：从初始值开始变化量小于 50 mΩ 外观：无损坏
4.4.6	Heat resistance (Unmated) 耐热性	(EIA-364-17B) Unmated connectors and expose to 85℃+/-2℃ for 250 hours. Upon completion of the exposure period, the test specimens shall be conditioned at ambient room conditions for 1 to 2 hours, after which the specified measurements shall be performed. 配对的连接器放置于 85℃+/-2℃温度中 250 小时，当完成实验后，样品放置一般环境中 1 到 2 小时后，再进行测试	Contact resistance: 接触阻抗 Contact: change from initial value 30 mΩMax. Shell: change from initial value 50 mΩMax. Appearance: No damage. 端子：从初始值开始变化量小于 30 mΩ 外壳：从初始值开始变化量小于 50 mΩ 外观：无损坏

4.4.7	Thermal Aging 高温老化	（EIA-364-17B，Condition4，Method A） Mate connector and expose to +105±2℃ for 250 hours. Upon completion of the exposure period, the test specimens shall be conditional at ambient room conditions for 1 to 2 hours, after which the specified measurements shall be performed. 配对的连接器放置于 105±2℃温度中 250 小时，当完成实验后，样品放置一般环境中 1 到 2 小时后，再进行测试	Appearance： No Damage 外观：无损坏 Contact Resistance 接触阻抗 Contact: change from initial value 30 mΩMax.端子：从初始值开始变化量小于 30 mΩ Shell: change from initial value 50 mΩMax.外壳：从初始值开始变化量小于 50 mΩ
4.4.8	IR-reflow 回流焊测试	Solder Temp.：260±5℃, 10±0.5sec. 焊锡温度：260±5℃, 10±0.5sec. 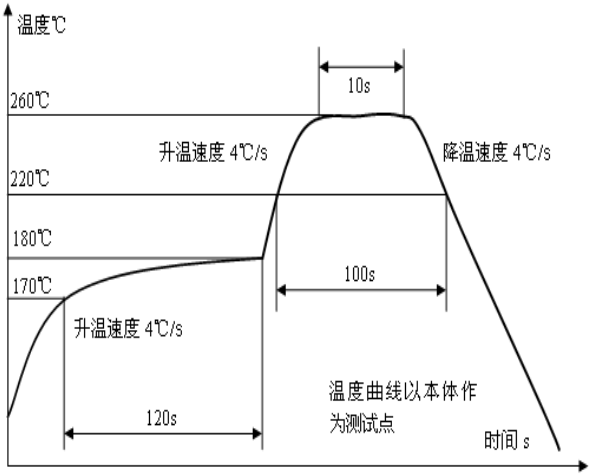 	No physical damage shall occur. 不可有损坏

Figure 1

Note1：Shall meet visual requirements, show no physical damage, and meet requirement of additional tests as specified in the test sequence in Figures 2
说明一：测试要求不能有物理损坏，测试依据表格二的顺序进行。

3. PRODUCT QUALIFICATION AND REQUALIFICATION TEST：产品测试顺序表 Figure 2

Test or Examination	Test Group													
	A	B	C	D	E	F	G	H	I	J	K	L		
	Test Sequence													
4.1.1.Examination of Product 产品外观	**1,6**	**1**	**1,5**	**1,5**	**1,5**	**1,3**	**1,9**	**1,5**	**1,5**	**1,5**	**1,5**	**1,3**		
4.2.1.Contact Resistance 接触阻抗	**2,5**		**2,4**	**2,4**	**2,4**		**2,8**	**2,4**	**2,4**	**2,4**	**2,4**			
4.2.2.Dielectric Withstanding Voltage 耐电压							**3,7**							
4.2.3.Insulation Resistance 绝缘阻抗							**4,6**							
4.3.1Insertion / Withdrawal force 插拔力	**3**													
4.3.2.Durability 寿命测试	**4**													
4.3.3.Terminal retention force 端子保持力		**2**												
4.3.4.Vibration 振动性			**3**											
4.3.5.Physical shock 物理冲击				**3**										
4.4.1.Thermal shock test 冷热冲击					**3**									
4.4.2.Solderability 焊锡性						**2**								
4.4.3.Humidity 恒温恒湿							**5**							
4.4.4.Salt Spray 盐水喷雾								**3**						
4.4.5.Cold resistance 耐寒性									**3**					
4.4.6.Heat resistance 耐热性										**3**				
4.4.7.Thermal Aging 高温老化											**3**			
4.4.8. IR-reflow 回流焊测试												**2**		
No. of Test Samples (Min.) 测试样品数量（最少）	**5**	**5**	**5**	**5**	**5**	**5**	**5**	**5**	**5**	**5**	**5**	**5**		

保密等级：☐ 绝密 ■ 保密 ☐ 普通

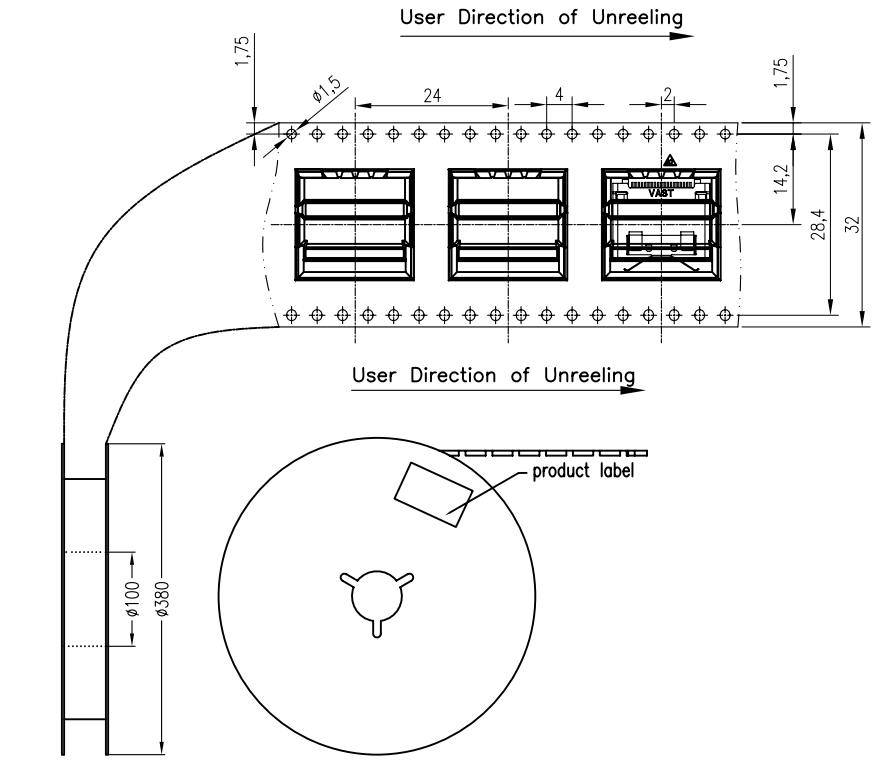

NOTES

1. 每卷包装数量:300PCS/每卷
2. 卷带包装方式：

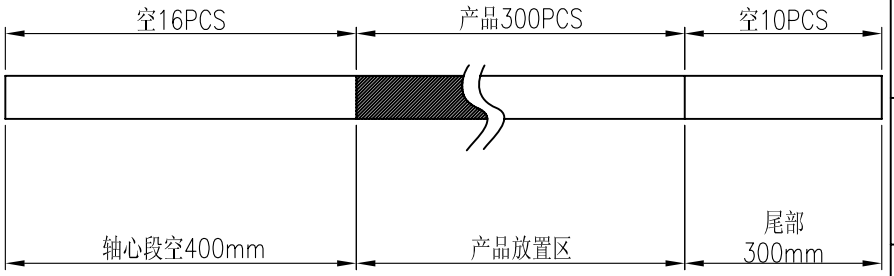

3.每箱包装数量:3000PCS/箱

4. 重量 ：

4.1 净重 ： 6.00Kg/Box,2.00g/PCS

4.2 毛重 ： 13.10Kg/Box.

5.**载料带** 颜色：黑色

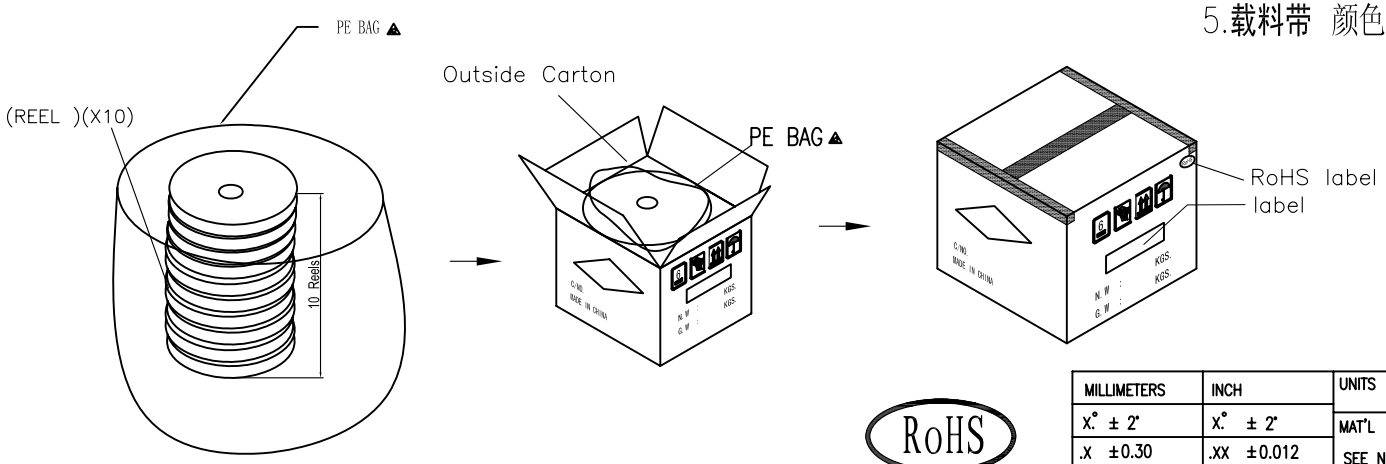

RoHS

H F

MILLIMETERS	INCH
X.° ± 2°	X.° ± 2°
.X ±0.30	.XX ±0.012
.XX ±0.20	.XXX ±0.008
.XXX± 0.10	.XXXX± 0.004

THESE DRAWINGS AND SPECIFICATIONS ARE THE PROPERTY OF Guang Ye Electronics Group COPIED OR USED IN ANY MANNER WITHOUT THE PRIOR WRITTEN CONSENT OF Guang Ye Electronics Group

UNITS	MM
MAT'L	SEE NOTES
FINISH	SEE NOTES
QTY	SEE NOTES

Guang Ye Electronics Group

PART NUMBER:	161012182
TITLE:	HDMI SOCKET R/A SMT 19PIN WITH SHRAPNEL,SHELL DIP, CUSTOMER DWG
APPD:	NICO.LI
DWG NO.:	C-161012182-00
CHKD:	YINWANG
DR:	LEIPENG

SCALE	SHEET	REV.
1:1	2/2	A2

VAST ELECTRONICS CO.,LTD

Group A TEST REPORT

Report No.2015120101

****

Applicant: QC Department
Test item: Visual Inspection→CR →Insertion&withdraw →Durability →
CR →Visual inspection
Product: HDMI CONNECTOR
Part No.: 161012182
Quantity: 5PCS
Sample Received: 2015-12-1
Testing Period: 2015-12-2to 2015-12-3
Measuring Environment: Temperature.22+-2℃, R.H.58+-3%
Testing conditions: According to general HDMI's product specifications.
1.CR:(1)Contact:V=20mV;A=10mA(2)Shell:V=5V;A=100mA
2.Automatic cycling :10000 cycles at 100±50 cycles per hour
3.Insertion and Withdrawal speed :25 mm/Minute
Sample No.:1,2,3,4,5.

Testing Equipment:

Name	Mated&unmated force tester	Micro-Ohmmeter
Model	1220s	TH2512B

Testing Results:

1. Contact Resistance:

1.1 Before Durability test for Contact

Sample No		1	2	3	4	5	6	7	8	9	10
1	9PIN	2.94	3.02	3.81	2.51	4.26	2.11	3.63	4.14	6.93	/
	10PIN	3.26	2.74	1.50	2.57	2.57	2.22	1.44	2.79	2.20	4.81
2	9PIN	7.72	7.57	6.85	3.26	3.62	3.03	3.93	7.95	5.10	/
	10PIN	2.17	4.09	3.39	2.88	1.16	3.17	2.67	4.40	3.03	3.87
3	9PIN	2.43	2.08	2.95	1.46	2.62	1.41	3.34	2.82	5.14	/
	10PIN	2.99	2.31	1.50	2.28	1.03	1.28	1.96	2.15	2.09	2.48
4	9PIN	3.35	2.17	2.90	1.39	2.89	1.73	3.03	3.16	5.28	/
	10PIN	3.17	2.33	1.87	2.05	1.80	1.96	1.92	1.67	2.08	4.20
5	9PIN	5.70	4.51	4.86	5.06	4.57	2.89	5.61	5.05	6.37	/
	10PIN	3.73	4.42	3.04	3.45	2.41	4.40	3.17	4.71	6.03	7.64
Specifition					Max	Min	Avg	Judgement		OK	
10mΩ/max					7.64	1.03	3.26				

1.2 Before Durability test for Shell

Sample No	测点1	测点2	测点3	测点4	测点5
#1	2.45	3.45	3.71	4.32	3.57
#2	4.14	5.10	4.45	5.77	5.28
#3	3.54	3.37	4.28	4.25	4.31
#4	4.08	4.51	4.04	4.71	4.70
#5	3.13	3.80	4.62	4.13	4.06
Specifition		Max	Min	Avg	Judgement	OK
10mΩ/max		5.77	2.45	4.15		

1.3 After Durability test for Contact

Sample No		1	2	3	4	5	6	7	8	9	10
1	9PIN	3.90	6.95	4.82	4.41	6.53	7.13	6.74	8.62	8.65	/
	10PIN	4.77	5.21	3.37	3.66	6.07	3.71	2.72	4.16	3.94	6.93
2	9PIN	6.17	5.23	7.93	7.02	8.52	5.05	9.84	5.42	6.78	/
	10PIN	6.93	6.18	7.78	8.63	3.97	7.11	5.96	7.41	6.14	5.45
3	9PIN	4.89	4.17	6.21	2.74	8.63	3.70	9.78	8.19	7.54	/
	10PIN	5.87	4.24	3.96	4.28	3.18	6.55	2.68	2.24	4.52	3.94
4	9PIN	5.35	5.56	6.92	3.01	7.10	2.34	4.11	7.30	8.41	/
	10PIN	8.14	4.71	4.37	4.87	4.65	5.06	3.21	3.97	4.47	6.52
5	9PIN	9.75	4.48	5.48	4.44	4.49	3.87	4.24	6.01	5.89	/
	10PIN	5.27	4.45	3.60	4.62	4.88	4.61	4.04	6.11	6.24	7.96
Specifition					Max	Min	Avg	Judgement		OK	
40mΩ/max					9.84	2.24	5.55				

1.4 After Durability test for Shell

Sample No	测点1	测点2	测点3	测点4	测点5
#1	3.92	3.57	4.24	4.08	3.68
#2	4.25	4.16	4.37	4.18	4.00
#3	3.92	3.15	3.26	3.41	3.65
#4	4.38	4.29	4.34	4.55	4.60
#5	3.59	3.79	2.66	4.45	3.58
Specifition		Max	Min	Avg	Judgement	OK
60mΩ/max		4.60	2.66	3.92		

Please refer to next page

2. Insertion and Withdrawal force:(Unit:Kgf)

2.1 Before test:

Test item	Insertion	Withdrawal	Judgemen
Spec:	**4.5Kgf/Max**	**1～4Kgf**	
Sample 1	1.203	1.674	**OK**
Sample 2	1.346	1.733	**OK**
Sample 3	1.187	1.575	**OK**
Sample 4	1.292	1.634	**OK**
Sample 5	1.279	1.575	**OK**

3. Visual inspection

Test item	Visual inspection	Visual inspection
	Before Test	Before Test
Spec:	**No damage**	**No damage**
Sample 1	Passed	Passed
Sample 2	Passed	Passed
Sample 3	Passed	Passed
Sample 4	Passed	Passed
Sample 5	Passed	Passed

Test Picture:

1.CR test:



2. Durability:

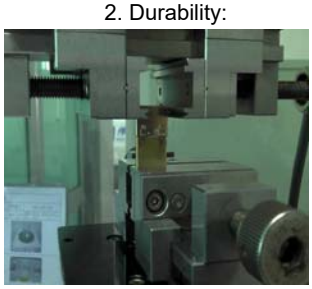

3.Visual Inspection:

Initial:

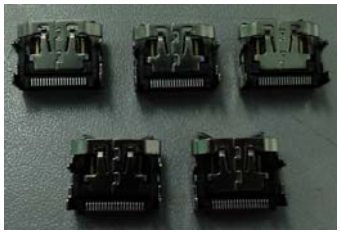

Final:



Note: Contact resistance Excluding conductor Resistance

Approved: zhangyanhai **Checked: Mengbinwen** **Operator: Mengxiling**

****

VAST ELECTRONICS CO.,LTD

Group C TEST REPORT

Report No.2015120102

Applicant: QC Department
Test Item: Visual Inspection→ CR→ Vibration →CR →Visual Inspection
Product: HDMI CONNECTOR
Part No.: 161012182
Quantity: 5PCS
Sample Received: 2015-12-1
Testing Period: 2015-12-21 to 2015-12-25
Measuring Environment: Temperature.22+-2℃, R.H.58+-3%
Testing conditions: According to general HDMI's product specifications.

1.CR:(1)Contact:V=20mV;A=10mA(2)Shell:V=5V;A=100mA
2 .Amplitude:1.52mm P-P or 147m/s² {15G}
Sweep time:50-2000-50Hz in 20 minutes.
Duration:12 times in each(total of 36 times)X, Y, Z, axes.
Eectrical load:DC100mA current shall be flowed during the test
Sample No.:1,2,3,4,5.

Testing equipment:

Nane	Micro-ohmmeter	Vibration tester
Model	TH2512B	DY-1000-8

Testing Results:

1. Contact Resistance:(unit:mΩ)

1.1 Before Vibration test for Contact

Sample No		1	2	3	4	5	6	7	8	9	10
1	9PIN	4.56	4.58	4.00	2.95	7.24	4.13	5.23	5.57	7.42	/
	10PIN	3.78	5.13	3.62	4.50	3.36	4.80	4.11	5.91	5.90	6.13
2	9PIN	8.16	5.68	6.14	6.36	6.46	4.75	5.67	6.69	7.42	/
	10PIN	4.13	4.39	2.81	4.59	2.75	4.43	5.10	5.05	6.16	5.61
3	9PIN	4.25	2.94	4.08	2.65	3.57	2.39	4.04	4.44	6.38	/
	10PIN	4.47	3.98	2.18	3.44	2.23	3.14	2.27	3.07	2.93	3.72
4	9PIN	7.00	6.24	5.57	3.18	5.61	7.41	4.67	7.88	8.56	/
	10PIN	3.24	4.12	3.06	3.82	2.63	3.80	3.33	3.98	4.11	4.93
5	9PIN	4.38	3.64	4.05	2.96	4.00	3.00	3.97	5.03	6.70	/
	10PIN	4.10	3.94	2.59	4.09	2.35	2.92	2.44	3.75	3.61	4.53
					Max	Min	Avg	Judgement		OK	
10mΩ/max					8.56	2.18	4.49				

1.2 Before Vibration test for Shell

Sample No	测点1	测点2	测点3	测点4	测点5
#1	3.35	3.93	3.32	3.89	3.86
#2	3.89	4.19	4.92	5.29	3.27
#3	3.66	4.18	4.14	4.90	4.24
#4	5.02	4.10	3.06	3.19	3.79
#5	2.43	2.67	2.56	3.26	2.62

Specifition	Max	Min	Avg	Judgement	OK
10mΩ/max	5.29	2.43	3.75		

1.3 After Vibration test for Contact

Sample No		1	2	3	4	5	6	7	8	9	10
1	9PIN	5.48	5.11	4.13	3.35	5.85	6.31	5.98	5.15	7.61	/
	10PIN	4.98	6.84	9.69	6.74	7.22	7.18	7.17	9.67	7.30	5.52
2	9PIN	7.73	6.58	7.01	5.12	5.29	6.34	6.15	6.41	6.32	/
	10PIN	7.36	5.39	5.52	8.51	6.55	7.22	7.35	9.52	7.60	7.50
3	9PIN	5.80	6.44	6.19	11.85	5.12	6.22	7.78	12.52	7.48	/
	10PIN	8.72	6.76	8.95	8.87	11.27	10.80	9.62	9.26	8.10	6.27
4	9PIN	7.32	7.09	5.14	9.51	11.00	7.06	7.28	5.62	5.80	/
	10PIN	5.52	7.92	8.09	5.79	6.05	7.14	7.14	6.44	6.35	6.60
5	9PIN	5.18	4.86	5.12	4.39	7.26	8.33	9.98	6.34	8.53	/
	10PIN	7.35	12.48	4.73	5.31	4.52	8.64	6.98	4.50	8.23	7.83
					Max	Min	Avg	Judgement		OK	
40mΩ/max					12.52	3.35	7.08				

1.4 After Vibration test for Shell

Sample No	测点1	测点2	测点3	测点4	测点5
#1	4.46	4.56	4.29	4.34	5.11
#2	3.54	4.47	3.87	3.88	4.78
#3	5.85	5.00	4.62	5.81	4.67
#4	5.49	6.10	5.87	5.96	6.52
#5	4.53	4.12	4.42	4.30	4.71

Specifition	Max	Min	Avg	Judgement	OK
60mΩ/max	6.52	3.54	4.85		

Note: Contact resistance Excluding conductor Resistance

Please refer to next page

2. Visual inspection

Test item	Visual inspection	Visual inspection
	Before Test	After Test
Spec:	**No damage**	**No damage**
Sample 1	Passed	Passed
Sample 2	Passed	Passed
Sample 3	Passed	Passed
Sample 4	Passed	Passed
Sample 5	Passed	Passed

3. Discontinuity

Test item	Discontinuity		
Spec:	**X- axis**	**Y- axis**	**Z- axis**
	Discontinuity< 1us		
Sample 1	Passed	Passed	Passed
Sample 2	Passed	Passed	Passed
Sample 3	Passed	Passed	Passed
Sample 4	Passed	Passed	Passed
Sample 5	Passed	Passed	Passed

Note: Contact resistance Excluding Product's resistance

Test Picture:

1.CR test:

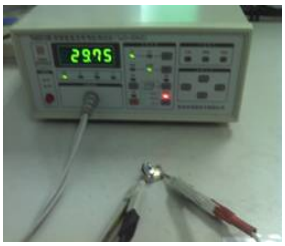

2.Vibration :



3.Visual Inspection:

Initial:



Final:



Approved: zhangyanhai **Checked: Mengbinwen** **Operator: Mengxiling**

****

VAST ELECTRONICS CO.,LTD

Group D TEST REPORT

Report No.2015120103

Applicant: QC Department
Test Item: Visual insepction→ CR→ Physical Shock→CR →visual inspection
Product: HDMI CONNECTOR
Part No.: 161012182
Quantity: 5PCS
Sample Received: 2015-12-1
Testing Period: 2015-12-21 to 2015-12-25
Measuring Environment: Temperature.22+-2℃, R.H.58+-3%
Testing conditions: According to general HDMI's product specifications.
1.CR:(1)Contact:V=20mV;A=10mA(2)Shell:V=5V;A=100mA
2 .Pusle width:11msec
Waveform: Half-sine
490 m/ s²(50G)3 strokes in each X,Y ,Z axes.
Sample No.:1,2,3,4,5.

Testing equipment:

Nane	Micro-ohmmeter	Shock tester
Model	TH2512B	CL-100

Testing Results:

1. Contact Resistance:(unit:mΩ)

1.1 Before Physical Shock test for Contact

Sample No		1	2	3	4	5	6	7	8	9	10
1	9PIN	5.39	3.94	4.46	3.27	4.21	3.42	5.01	5.30	7.45	/
	10PIN	4.71	6.70	4.77	5.28	5.45	5.98	4.19	5.40	5.51	6.19
2	9PIN	6.68	6.23	6.24	4.79	5.93	5.66	6.23	6.88	7.68	/
	10PIN	3.79	4.24	3.92	4.73	3.88	5.24	4.62	5.18	4.12	4.19
3	9PIN	5.28	4.56	5.28	4.18	5.45	4.78	6.42	4.74	5.81	/
	10PIN	4.11	4.20	3.28	4.42	3.43	4.55	3.36	5.46	7.24	7.82
4	9PIN	5.38	3.80	5.51	3.76	4.93	3.33	5.03	5.25	7.13	/
	10PIN	6.05	6.85	3.81	4.66	3.40	3.54	3.26	4.47	4.70	6.10
5	9PIN	8.36	5.07	4.87	4.82	5.37	4.97	5.18	7.89	8.11	/
	10PIN	3.55	5.93	3.59	5.32	2.95	4.14	4.01	4.18	4.74	5.23
Specifition					Max	Min	Avg	Judgement		OK	
10mΩ/max					8.36	2.95	5.06				

1.2 Before Physical Shock test for Shell

Sample No	测点1	测点2	测点3	测点4	测点5
#1	1.86	1.88	2.79	2.74	1.93
#2	2.41	2.17	1.82	2.73	2.33
#3	2.47	2.80	3.15	3.37	3.16
#4	1.06	1.25	1.84	1.97	2.17
#5	2.52	2.53	1.97	1.57	1.91

Specifition	Max	Min	Avg	Judgement	OK
10mΩ/max	3.37	1.06	2.26		

1.3 After Physical Shock test for Contact

Sample No		1	2	3	4	5	6	7	8	9	10
1	9PIN	6.55	7.91	6.72	6.05	7.47	7.34	7.20	8.00	9.00	/
	10PIN	5.50	7.07	6.70	5.63	6.55	4.55	7.56	8.45	9.01	8.79
2	9PIN	6.64	6.98	7.46	8.77	9.81	7.89	6.47	7.70	8.14	/
	10PIN	9.57	6.43	8.06	5.63	6.40	5.28	9.07	7.38	8.26	9.08
3	9PIN	6.14	8.79	7.90	8.83	6.90	7.74	5.96	6.60	7.70	/
	10PIN	8.31	5.66	7.53	8.64	6.37	5.32	5.51	9.56	8.40	6.81
4	9PIN	4.43	6.99	3.69	6.60	5.00	4.54	6.56	7.79	7.88	/
	10PIN	6.87	8.60	4.00	5.61	4.20	4.32	4.84	7.69	8.06	9.91
5	9PIN	8.15	7.88	6.46	6.16	6.31	7.41	7.60	5.72	5.79	/
	10PIN	7.32	6.58	6.46	9.15	6.35	8.32	6.84	5.91	7.48	8.56
Specifition					Max	Min	Avg	Judgement		OK	
40mΩ/max					9.91	3.69	7.07				

1.4 After Physical Shock test for Shell

Sample No	测点1	测点2	测点3	测点4	测点5
#1	2.54	2.46	2.71	2.61	2.74
#2	1.97	2.03	1.94	2.63	1.56
#3	1.92	2.16	1.80	1.90	1.60
#4	2.69	2.94	3.37	3.21	2.16
#5	2.06	3.14	3.09	2.75	2.34

Specifition	Max	Min	Avg	Judgement	OK
60mΩ/max					

Note: Contact resistance Excluding conductor Resistance

Please refer to next page

2. Visual inspection

Test item	Visual inspection	Visual inspection
	Before Test	After Test
Spec:	**No damage**	**No damage**
Sample 1	Passed	Passed
Sample 2	Passed	Passed
Sample 3	Passed	Passed
Sample 4	Passed	Passed
Sample 5	Passed	Passed

3. Discontinuity

Test item	Discontinuity		
Spec:	**X- axis**	**Y- axis**	**Z- axis**
	Discontinuity< 1us		
Sample 1	Passed	Passed	Passed
Sample 2	Passed	Passed	Passed
Sample 3	Passed	Passed	Passed
Sample 4	Passed	Passed	Passed
Sample 5	Passed	Passed	Passed

Test Picture:

1.CR test:



2.Shock :



3.Visual Inspection:

Initial:



Final:



Approved: zhangyanhai **Checked: Mengbinwen** **Operator: Mengxiling**

****

VAST ELECTRONICS CO.,LTD

Group E TEST REPORT

Report No.2015120104

Applicant: QC Department
Test Item: Visual inspection →CR →Thermal shock→ CR→ Visual inspection
Product: HDMI CONNECTOR
Part No.: 161012182
Quantity: 5PCS
Sample Received: 2015-12-1
Testing Period: 2015-12-7to 2015-12-8
Measuring Environment: Temperature.22+-2℃, R.H.58+-3%
Testing conditions: According to general HDMI's product specifications.
1.CR:(1)Contact:V=20mV;A=10mA(2)Shell:V=5V;A=100mA
2 .10 cycles of:
(a) -55±3°C for 30 minutes
(b) +85±3°C for 30 minutes
Sample No.:1,2,3,4,5.

Testing equipment:

Nane	Micro-ohmmeter	Thermal shock tester
Model	TH2512B	ESPEC EL-02KA

Testing Results:

1. Contact Resistance:

1.1 Before Therminal shock test for Contact

Sample No		1	2	3	4	5	6	7	8	9	10
1	9PIN	5.71	4.55	5.57	3.97	6.62	5.23	6.56	7.49	8.96	/
	10PIN	3.76	3.92	3.21	4.07	2.66	3.73	3.19	4.73	4.06	8.71
2	9PIN	6.06	5.16	5.64	6.24	5.97	5.40	7.25	5.73	4.39	/
	10PIN	4.47	5.74	3.80	5.31	4.07	5.96	4.03	5.28	4.59	5.14
3	9PIN	4.64	5.13	4.16	3.70	5.33	4.83	4.83	6.84	8.30	/
	10PIN	3.49	3.77	2.61	3.21	2.50	3.70	3.54	4.91	4.12	4.90
4	9PIN	4.37	3.60	4.61	3.35	5.43	4.05	4.74	5.23	6.73	/
	10PIN	4.34	3.57	3.29	3.26	2.06	2.03	1.75	2.35	2.95	3.40
5	9PIN	3.63	4.19	2.08	3.22	1.17	2.94	3.91	4.81	5.77	/
	10PIN	5.94	4.20	3.86	2.08	3.03	2.36	3.15	2.79	4.96	5.07
Specifition					Max	Min	Avg	Judgement		OK	
10mΩ/max					8.96	1.17	4.44				

1.2 Before Therminal shock test for Shell

Sample No	测点1	测点2	测点3	测点4	测点5
#1	3.66	3.06	2.08	2.19	3.37
#2	1.84	1.42	1.42	2.71	2.10
#3	1.74	2.02	1.72	1.59	2.36
#4	2.44	1.23	2.14	2.16	1.62
#5	2.02	1.85	2.06	1.91	1.65

Specifition	Max	Min	Avg	Judgement	OK
10mΩ/max	3.66	1.23	2.09		

1.3 Aefore Therminal shock test for Contact

Sample No		1	2	3	4	5	6	7	8	9	10
1	9PIN	8.36	9.20	5.59	6.44	6.25	7.22	5.25	10.13	9.86	/
	10PIN	7.16	7.71	7.22	5.61	5.46	8.21	8.44	5.79	10.31	6.94
2	9PIN	7.86	5.33	5.15	6.61	6.08	7.80	7.29	7.07	6.97	/
	10PIN	8.24	7.47	7.71	6.95	8.60	7.79	8.39	9.51	9.27	6.03
3	9PIN	6.43	7.15	4.59	4.83	4.04	4.07	5.48	5.16	3.79	/
	10PIN	3.19	2.48	4.31	6.27	5.92	7.73	9.16	8.37	6.46	7.30
4	9PIN	6.97	6.04	5.15	7.22	7.06	6.82	7.85	7.97	6.64	/
	10PIN	4.57	6.45	9.89	7.27	4.62	7.60	8.33	4.30	9.04	6.34
5	9PIN	5.06	4.89	3.50	6.23	5.00	4.76	6.45	8.53	7.13	/
	10PIN	6.36	5.38	4.77	5.06	6.31	6.54	5.75	6.70	7.46	7.47
Specifition					Max	Min	Avg	Judgement		OK	
40mΩ/max					10.31	2.48	6.65				

1.3 Aefore Therminal shock test for Shell

Sample No	测点1	测点2	测点3	测点4	测点5
#1	4.92	3.15	3.64	4.06	3.11
#2	3.01	2.02	2.40	2.60	3.04
#3	2.84	3.60	4.38	2.40	3.31
#4	3.11	4.27	4.25	3.95	3.45
#5	3.01	3.18	2.76	3.04	3.07

Specifition	Max	Min	Avg	Judgement	OK
60mΩ/max	4.92	2.02	3.30		

Note: Contact resistance Excluding conductor Resistance

Please refer to next page

2.Visual Inspection:

Test item	Visual inspection	Visual inspection
	Before Test	Before Test
Spec:	**No damage**	**No damage**
Sample 1	Passed	Passed
Sample 2	Passed	Passed
Sample 3	Passed	Passed
Sample 4	Passed	Passed
Sample 5	Passed	Passed

Test Picture:

1.CR test:



2.Thermal Aging:



3.Visual Inspection:

Initial:



Final:



Note: Contact resistance Excluding conductor Resistance

Approved: zhangyanhai **Checked: Mengbinwen** **Operator: Mengxiling**

****

VAST ELECTRONICS CO.,LTD

Group F TEST REPORT

Report No.2015120105

****

Applicant: QC Department
Test Item: Solderability
Product: HDMI CONECTOR
Part No.: 161012182
Quantity: 5PCS
Sample Received: 2015-12-1
Testing Period: 2015-12-2
Measuring Environment: Temperature.22+-2℃, R.H.58+-3%
Testing conditions: According to general HDMI's product specifications.
To be sipped in the solder bath 235±5℃ Coverage for 3 seconds
Sample No.:1,2,3,4,5.

Testing equipment:

Name	Tin Oven
Model	CT51D

Testing Results:

1. Soldering ability

Test item	Soldering ability
Spec:	**Tin area >95%**
Sample 1	Passed
Sample 2	Passed
Sample 3	Passed
Sample 4	Passed
Sample 5	Passed

2. Visual inspection

Test item	Visual inspection	Visual inspection
	Before Test	After test
Spec:	**No damage**	**No damage**
Sample 1	Passed	Passed
Sample 2	Passed	Passed
Sample 3	Passed	Passed
Sample 4	Passed	Passed
Sample 5	Passed	Passed

Testing Picture:

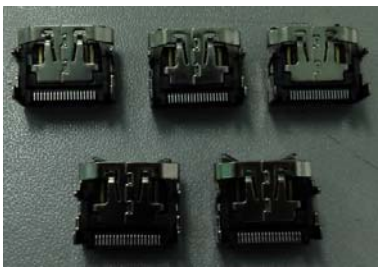

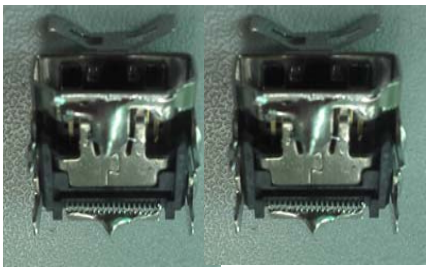

Approved: zhangyanhai **Checked: Mengbinwen** **Operator: Mengxiling**

****

VAST ELECTRONICS CO.,LTD

Group G TEST REPORT

Report No.2015120106

Applicant: QC Department
Test Item: Visual inepction →CR→DWV→ I.R. →Humidity →I.R.→DWV →
→CR→ Visualinspection
Product: HDMI CONNECTOR
Part No.: 161012182
Quantity: 5PCS
Sample Received: 2015-12-1
Testing Period: 2015-12-5 to 2015-12-9
Measuring Environment: Temperature.22+-2℃, R.H.58+-3%
Testing conditions: According to general HDMI's product specifications.
1.CR:(1)Contact:V=20mV;A=10mA(2)Shell:V=5V;A=100mA
2.I/R:(1)Mated:500V DC for 1minute(2)Unmated:150V DC for 1minute
3.DVW:(1)Umated=500V AC (2)Mated=300V AC
4.Humidity:Tem.:+25 to +85℃,Humidity: 80 to 95%RH,Duration:96hours
Sample No.:1,2,3,4,5.

Testing equipment:

Name	Micro-	Dielectric Voltage	Insulation	Humidity
Model	TH2512B	LK2670A	LX-8986HV	BPL-80

Testing Results:

1. Contact resistance

1.1 Befor Humidity test for Contact

Sample No		1	2	3	4	5	6	7	8	9	10
1	9PIN	5.42	5.64	4.83	3.68	2.84	3.75	6.16	3.79	4.69	/
	10PIN	2.50	2.62	6.65	4.22	2.92	4.89	3.79	2.42	6.10	6.22
2	9PIN	3.74	2.20	3.03	3.42	3.46	4.86	1.76	3.91	4.60	/
	10PIN	4.60	5.96	2.46	5.53	5.92	4.02	3.24	4.98	5.03	5.81
3	9PIN	5.73	3.43	2.41	3.71	2.48	3.28	4.09	3.42	5.53	/
	10PIN	4.31	5.64	3.66	3.06	2.08	2.19	3.37	5.74	4.02	6.72
4	9PIN	2.59	2.36	3.44	5.23	2.14	2.16	4.62	5.69	5.58	/
	10PIN	5.08	3.79	4.24	2.81	5.37	5.05	3.45	2.55	5.08	4.28
5	9PIN	3.78	4.96	2.40	3.48	2.44	3.01	5.28	2.44	4.78	/
	10PIN	5.45	3.54	3.24	3.56	3.43	4.41	4.92	5.30	3.37	4.40
Specifition					Max	Min	Avg	Judgement		OK	
10mΩ/max					6.72	1.76	4.07				

1.2 Befor Humidity test for Shell

Sample No	测点1	测点2	测点3	测点4	测点5
#1	2.17	4.53	3.17	4.00	3.54
#2	2.92	2.16	3.75	3.14	2.95
#3	3.05	3.16	3.47	3.50	4.00
#4	4.01	3.28	3.96	3.47	3.50
#5	3.49	3.58	3.26	2.87	2.54

Specifition	Max	Min	Avg	Judgement	OK
10mΩ/max	4.53	2.16	3.34		

1.3 After Humidity test for Contact

Sample No		1	2	3	4	5	6	7	8	9	10
1	9PIN	4.65	6.27	6.55	5.79	6.87	7.37	7.46	6.80	7.11	/
	10PIN	7.15	4.18	7.24	7.41	8.27	4.56	4.17	8.14	9.19	6.53
2	9PIN	5.20	9.18	5.24	6.22	9.19	3.42	8.62	8.83	6.33	/
	10PIN	7.69	8.56	5.51	5.64	7.73	6.01	6.19	7.18	6.23	5.28
3	9PIN	5.27	4.20	6.19	3.20	3.22	4.23	8.30	7.71	5.96	/
	10PIN	6.93	6.22	6.52	5.64	7.06	6.09	5.03	5.24	7.60	6.32
4	9PIN	6.30	5.60	4.91	5.82	6.81	6.08	5.02	5.08	6.44	/
	10PIN	6.44	5.00	6.53	4.55	3.88	4.69	7.00	8.87	4.20	6.55
5	9PIN	4.32	3.63	4.58	4.46	4.63	6.44	5.11	7.08	6.10	/
	10PIN	4.44	5.01	4.75	5.32	9.29	6.03	6.78	5.12	8.50	6.11
Specifition					Max	Min	Avg	Judgement		OK	
40mΩ/max					9.29	3.20	6.13				

1.4 After Humidity test for Shell

Sample No	测点1	测点2	测点3	测点4	测点5
#1	3.25	4.48	3.55	6.16	4.69
#2	4.64	4.21	4.16	3.67	4.66
#3	2.59	4.24	5.19	5.26	4.95
#4	3.60	2.57	3.82	3.49	3.59
#5	4.16	3.57	3.22	4.65	3.98

Specifition	Max	Min	Avg	Judgement	OK
60mΩ/max	6.16	2.57	4.09		

Please refer to next page

2. Insulation Resistance and dielectric Withstanding Voltage

2.1 Before Humidity Test :

Test item	Visual inspection	I/R	DVW
Spec:	No damage	Umaitng:R>100MΩ Mating:R>10MΩ	Unmated&Mated: No Breakdown
Sample 1	Passed	Passed	Passed
Sample 2	Passed	Passed	Passed
Sample 3	Passed	Passed	Passed
Sample 4	Passed	Passed	Passed
Sample 5	Passed	Passed	Passed

2.2 After Humidity Test:

Test item	Visual inspection	I/R	DVW
Spec:	No damage	Umaitng:R>100MΩ Mating:R>10MΩ	Unmated&Mated: No Breakdown
Sample 1	Passed	Passed	Passed
Sample 2	Passed	Passed	Passed
Sample 3	Passed	Passed	Passed
Sample 4	Passed	Passed	Passed
Sample 5	Passed	Passed	Passed

Test Picture:

1.CR test:



2.Insulation resistance test:



3.DWV Test:



4.Humidity test:



5.Visual Inspection:

Initial:



Final:



Note: Contact resistance Excluding conductor Resistance

Approved: zhangyanhai **Checked: Mengbinwen** **Operator: Mengxili**

****

VAST ELECTRONICS CO.,LTD

Group H TEST REPORT

Report No.2015120107

Applicant: QC Department
Test Item: Visual inspection→ CR →Salt spray→ CR→ Visual inspection
Product: HDMI CONNECTOR
Part No: 161012182
Quantity: 5PCS
Sample Received: 2015-12-1
Testing Period: 2015-12-7 to 2015-12-9
Measuring Environment: Temperature.22+-2℃, R.H.58+-3%
Testing conditions: According to general HDMI's product specifications.

1.CR;V=20mV,A=10mA
2.Salt solution:5% salt water,PH 6.5-7.2.
3.Temperature of test chamber:35+/-1℃.
4.Temperature of air supply:47+/-1℃.
5.Compressed air pressure:1.0+/-0.01kgf/㎠
6.Collected rate:1-2ml/80㎠/hour
7.Duration:48hours
Sample No.:1,2,3,4,5.

Testing Equipment:

Name	Micro-Ohmmeter	Salty spray Tester
Model	TH2512B	GX-Y-60

Testing Results:

1. Contact Resistance:(unit:mΩ)

1.1 Before Salt Spray test for Contact

Sample No		1	2	3	4	5	6	7	8	9	10
1	9PIN	4.99	3.52	4.03	3.55	3.73	4.28	3.44	2.11	3.91	/
	10PIN	2.19	4.14	3.55	2.26	1.92	1.06	3.12	4.16	5.23	4.99
2	9PIN	5.12	4.83	2.86	3.01	2.65	4.65	3.65	5.66	3.74	/
	10PIN	4.87	5.67	3.91	2.72	3.88	4.22	2.31	5.68	6.30	6.58
3	9PIN	3.87	2.92	3.09	3.42	4.77	4.40	3.71	5.07	4.59	/
	10PIN	4.52	3.66	5.84	5.13	4.86	4.35	4.00	5.99	5.78	6.17
4	9PIN	4.70	3.81	5.90	2.69	2.18	3.46	4.59	5.58	6.56	/
	10PIN	4.32	5.35	6.02	4.73	3.45	2.39	2.96	3.74	4.42	5.45
5	9PIN	2.31	3.45	2.48	2.58	3.59	4.44	3.75	2.04	4.06	/
	10PIN	3.92	4.28	5.38	4.41	3.81	3.61	3.81	6.29	6.16	6.53
Specifition					Max	Min	Avg	Judgement		OK	
10mΩ/max					6.58	1.06	4.15				

1.2 Before Salt Spray test for Shell

Sample No	测点1	测点2	测点3	测点4	测点5
#1	2.02	1.85	2.06	1.91	1.65
#2	1.40	1.88	2.08	1.77	1.22
#3	2.69	3.18	2.88	2.22	2.71
#4	2.92	2.68	3.31	1.95	2.99
#5	2.23	2.86	3.49	3.01	2.83

Specifition	Max	Min	Avg	Judgement	OK
10mΩ/max	3.49	1.22	2.39		

1.3 After Salt Spray test for Contact

Sample No		1	2	3	4	5	6	7	8	9	10
1	9PIN	6.22	5.57	6.51	6.88	8.00	9.14	9.39	4.77	6.23	/
	10PIN	6.78	8.65	7.17	6.62	4.20	7.12	8.17	9.17	6.17	6.60
2	9PIN	7.15	7.14	6.24	5.17	6.78	5.68	7.17	6.62	5.18	/
	10PIN	4.18	7.00	7.19	4.10	8.15	4.18	5.20	6.12	7.12	6.11
3	9PIN	5.63	7.15	9.72	6.21	5.30	8.39	7.46	7.22	8.93	/
	10PIN	7.87	8.69	8.70	9.14	5.82	6.27	6.81	6.76	6.97	6.96
4	9PIN	6.69	5.70	6.26	5.01	6.34	5.96	6.19	6.01	5.21	/
	10PIN	8.57	6.75	7.23	7.02	7.35	7.01	6.86	6.18	7.01	5.94
5	9PIN	5.90	6.17	5.58	5.69	3.61	5.61	6.09	6.60	6.36	/
	10PIN	8.56	7.67	4.31	4.55	5.29	5.38	5.00	9.40	5.14	5.48
Specifition					Max	Min	Avg	Judgement		OK	
40mΩ/max					9.72	3.61	6.58				

1.4 After Salt Spray test for Shell

Sample No	测点1	测点2	测点3	测点4	测点5
#1	3.21	2.93	2.74	2.58	3.09
#2	3.08	4.23	3.14	2.73	3.18
#3	3.10	4.00	3.02	4.03	3.15
#4	2.47	3.62	3.69	3.29	4.08
#5	3.48	3.49	3.59	4.52	5.79

Specifition	Max	Min	Avg	Judgement	OK
60mΩ/max	5.79	2.47	3.45		

Please refer to next page

2. Visual inspection

Test item	Visual inspection Before Test	Visual inspection Before Test
Spec:	**No damage**	**No damage**
Sample 1	Passed	Passed
Sample 2	Passed	Passed
Sample 3	Passed	Passed
Sample 4	Passed	Passed
Sample 5	Passed	Passed

Test Picture:

1.CR test:



2.Salt Spray:



3.Visual Inspection:

Initial:



Final:



Approved: zhangyanhai **Checked: Mengbinwen** **Operator: Mengxiling**

****

VAST ELECTRONICS CO.,LTD

Group I TEST REPORT

Report No.2015120108

Applicant: QC Department
Test Item: Visual Inspection→ CR→Cold Resistance→CR→ Visual inspection
Product: HDMI CONNECTOR
Part No.: 161012182
Quantity: 5PCS
Sample Received: 2015-12-1
Testing Period: 2015-12-11 to 2015-12-15
Measuring Environment: Temperature.22+-2℃, R.H.58+-3%
Testing conditions: According to general HDMI's product specifications.
1.CR:(1)Contact:V=20mV;A=10mA(2)Shell:V=5V;A=100mA
2.Unmated connectors and expose to -40℃+/-3℃ for 96 hours.
Sample No.:1,2,3,4,5.

Testing equipment:

Nane	Micro-ohmmeter	Humidity tester
Model	TH2512B	BPL-80

Testing Results:

1. Contact Resistance:

1.1 Before Cold resistance test for Contact

Sample No		1	2	3	4	5	6	7	8	9	10
1	9PIN	3.53	2.48	4.79	3.40	5.35	6.40	4.46	3.39	5.45	/
	10PIN	4.56	2.83	3.40	3.27	4.34	5.44	2.58	3.64	4.32	6.77
2	9PIN	3.56	5.29	4.06	3.07	1.29	2.21	5.36	3.10	4.37	/
	10PIN	2.99	4.02	5.00	4.84	4.89	2.80	3.00	2.09	5.22	6.09
3	9PIN	5.03	5.47	3.29	4.19	4.77	2.68	1.70	2.87	3.88	/
	10PIN	6.18	5.55	5.03	7.13	4.89	4.64	3.95	5.04	5.59	4.87
4	9PIN	5.36	4.47	4.70	4.53	1.81	1.59	2.69	4.61	5.74	/
	10PIN	3.86	4.68	5.88	2.76	3.64	4.14	2.99	3.77	4.53	5.34
5	9PIN	4.80	5.43	2.97	2.55	5.10	6.11	2.38	4.14	3.38	/
	10PIN	5.14	7.68	5.12	3.73	4.23	5.38	5.03	6.12	6.15	5.99
Specifition					Max	Min	Avg	Judgement		OK	
10mΩ/max					7.68	1.29	4.30				

1.2 Before Cold resistance test for She

Sample No	测点1	测点2	测点3	测点4	测点5
1	2.18	2.36	1.96	2.24	2.27
2	2.22	1.72	1.77	2.35	2.04
3	2.64	2.35	2.54	2.61	3.15
4	2.30	2.06	1.35	1.48	1.66
5	1.70	1.42	1.34	2.07	2.05
Specifition		Max	Min	Avg	Judgement	OK
10mΩ/max		3.15	1.34	2.07		

1.3 After Cold resistance test for Contact

Sample No		1	2	3	4	5	6	7	8	9	10
1	9PIN	4.71	5.10	5.50	9.24	6.23	7.16	8.19	4.26	8.56	/
	10PIN	6.21	7.20	9.24	6.19	8.40	6.60	6.69	8.60	7.45	6.59
2	9PIN	8.03	9.91	6.18	7.24	7.23	7.01	9.06	8.76	7.46	/
	10PIN	6.67	9.16	9.49	7.21	9.56	5.21	4.23	6.22	7.21	6.13
3	9PIN	7.21	8.14	6.18	6.23	9.23	8.23	6.20	5.21	7.21	/
	10PIN	5.24	8.21	6.22	4.21	5.17	9.23	7.44	7.05	9.05	10.18
4	9PIN	8.90	8.72	11.08	10.84	7.44	9.01	4.93	5.93	4.84	/
	10PIN	5.16	5.67	5.87	4.25	4.25	8.56	6.79	5.42	8.41	6.60
5	9PIN	5.02	5.16	5.13	8.52	6.52	5.43	4.31	7.48	9.45	/
	10PIN	6.48	5.40	4.41	6.41	5.52	7.41	4.44	9.37	6.12	8.33
Specifition					Max	Min	Avg	Judgement		OK	
40mΩ/max					11.08	4.21	6.98				

1.4 After Cold resistance test for Shell

Sample No	测点1	测点2	测点3	测点4	测点5
1	2.25	3.70	3.76	3.57	4.08
2	2.60	4.03	3.25	2.69	3.25
3	2.47	2.48	2.57	2.51	3.28
4	3.20	4.55	3.07	2.29	3.04
5	2.89	2.96	3.10	3.54	3.00
Specifition		Max	Min	Avg	Judgement	OK
60mΩ/max		4.55	2.25	3.13		

Please refer to next page

2. Visual inspection

Test item	Visual inspection Before Test	Visual inspection After Test
Spec:	No damage	No damage
Sample 1	Passed	Passed
Sample 2	Passed	Passed
Sample 3	Passed	Passed
Sample 4	Passed	Passed
Sample 5	Passed	Passed

Test Picture:

1.CR test:



2.Cold resistance:



3.Visual Inspection:

Initial:



Final:



Note: Contact resistance Excluding conductor Resistance

Approved: zhangyanhai **Checked: Mengbinwen** **Operator: Mengxiling**

****

VAST ELECTRONICS CO.,LTD

Group J TEST REPORT

Report No.2015120109

Applicant: QC Department
Test Item: Visual inspection →CR→ heat Resiatance→ CR →Visual inspection
Product: HDMI CONNECTOR
Part No: 161012182
Quantity: 5PCS
Sample Received: 2015-12-1
Testing Period: 2015-12-5 to 2015-12-9
Measuring Environment: Temperature.22+-2℃, R.H.58+-3%
Testing conditions: According to general HDMI's product specifications.
1.CR:(1)Contact:V=20mV;A=10mA(2)Shell:V=5V;A=100mA
2.Unmated connectors and expose to 85℃+/-2℃ for 96 hours
Sample No.:1,2,3,4,5.

Testing equipment:

Nane	Micro-ohmmeter	Oven
Model	TH2512B	RHDM-453

Testing Results:

1. Contact Resistance:(unit:mΩ)

1.1 Before Heat resistance test for Contact

Sample No		1	2	3	4	5	6	7	8	9	10
1	9PIN	5.00	7.85	4.92	3.40	2.73	3.28	4.25	5.30	7.67	/
	10PIN	7.25	4.38	3.83	6.89	2.77	4.44	4.58	3.60	3.67	4.64
2	9PIN	4.46	4.86	5.12	4.46	5.42	3.61	3.21	5.81	5.56	/
	10PIN	4.32	4.29	3.85	4.48	6.60	3.29	4.07	2.95	5.67	6.39
3	9PIN	2.52	5.97	5.34	6.70	2.49	6.33	2.48	3.84	4.78	/
	10PIN	5.50	6.81	1.98	2.46	1.98	2.43	2.83	1.48	5.35	6.25
4	9PIN	1.74	2.75	2.44	3.28	2.27	1.19	2.90	5.98	3.51	/
	10PIN	2.37	4.98	3.95	2.57	4.12	5.35	2.49	5.23	4.03	6.73
5	9PIN	5.67	4.65	3.80	2.89	3.42	4.03	2.68	3.93	5.98	/
	10PIN	4.67	7.63	4.50	3.49	2.10	3.97	3.55	2.41	3.17	5.36
Specifition					Max	Min	Avg	Judgement		OK	
10mΩ/max					10.08	3.71	6.56				

1.2 Before Heat resistance test for Shell

Sample No	测点1	测点2	测点3	测点4	测点5
#1	2.86	2.18	2.26	3.02	1.47
#2	3.03	1.46	1.68	2.04	2.34
#3	2.31	2.81	2.50	2.34	2.58
#4	2.68	2.17	3.28	2.49	2.32
#5	2.66	2.38	2.67	2.36	2.89

Specifition	Max	Min	Avg	Judgement	OK
10mΩ/max	3.28	1.46	2.43		

1.3 After Heat resistance test for Contact

Sample No		1	2	3	4	5	6	7	8	9	10
1	9PIN	6.50	4.44	6.48	5.45	6.40	5.45	6.40	8.46	9.47	/
	10PIN	5.10	5.45	6.61	7.23	6.20	5.87	6.81	7.67	6.30	10.08
2	9PIN	9.60	6.42	6.13	8.88	6.80	9.43	6.93	7.18	7.39	/
	10PIN	5.50	8.52	7.33	7.27	5.97	5.01	8.32	6.94	7.69	6.33
3	9PIN	9.43	5.54	6.61	7.65	9.44	5.73	7.26	5.91	6.90	/
	10PIN	4.20	6.19	5.18	7.18	6.28	5.10	8.14	5.18	4.91	6.57
4	9PIN	6.79	4.49	4.37	7.52	6.14	4.96	3.71	6.68	4.70	/
	10PIN	4.41	4.96	5.56	4.91	4.33	6.55	5.40	9.25	8.50	7.15
5	9PIN	7.54	7.79	6.60	5.90	6.14	6.18	6.77	7.33	5.90	/
	10PIN	5.31	5.74	5.34	5.44	6.58	5.13	9.47	7.53	4.93	9.51
Specifition					Max	Min	Avg	Judgement		OK	
40mΩ/max					10.08	3.71	6.56				

1.4 After Heat resistance test for Shell

Sample No	测点1	测点2	测点3	测点4	测点5
#1	3.64	3.75	3.29	3.68	3.77
#2	4.04	3.59	3.79	4.15	4.64
#3	3.78	4.20	3.67	3.54	4.01
#4	4.08	3.67	3.47	3.62	4.00
#5	4.01	3.67	3.58	3.68	3.82

Specifition	Max	Min	Avg	Judgement	OK
60mΩ/max	4.64	3.29	3.81		

Please refer to next page

2. Visual inspection

Test item	Visual inspection	Visual inspection
	Before Test	Before Test
Spec:	No damage	No damage
Sample 1	Passed	Passed
Sample 2	Passed	Passed
Sample 3	Passed	Passed
Sample 4	Passed	Passed
Sample 5	Passed	Passed

Test Picture:

1.CR test:



2.Hear resistance:



3.Visual inspection:

Initial:



Final:



Approved: zhangyanhai **Checked: Mengbinwen** **Operator: Mengxiling**

****

VAST ELECTRONICS CO.,LTD

Group K TEST REPORT

Report No.2015120110

****

Applicant: QC Department
Test Item: Visual Inspection→ CR →Thermal Aging→ CR→ Visual inspection
Product: HDMI CONNECTOR
Part No: 161012182
Quantity: 5PCS
Sample Received: 2015-12-1
Testing Period: 2015-12-14to 2015-12-18
Measuring Environment: Temperature.22+-2℃, R.H.58+-3%
Testing conditions: According to applicant's specifications.
1.CR:(1)Contact:V=20mV;A=10mA(2)Shell:V=5V;A=100mA
2.Mate connector and expose to +105±2℃ for 96 hours
Sample No.:1,2,3,4,5.

Testing equipment:

Nane	Micro-ohmmeter	Oven
Model	TH2512B	RHDM-453

Testing Results:

1. Contact Resistance:(unit:mΩ)

Sample No		1	2	3	4	5	6	7	8	9	10
1	9PIN	4.97	2.76	2.97	3.89	4.78	1.85	2.79	4.83	5.42	/
	10PIN	3.40	2.50	1.77	2.59	4.43	2.39	4.22	3.92	4.54	6.34
2	9PIN	2.40	5.72	5.83	4.72	3.19	2.11	2.42	1.50	3.74	/
	10PIN	6.96	5.90	3.20	6.31	2.38	2.33	5.27	3.98	4.10	6.35
3	9PIN	5.66	5.57	5.13	4.32	3.15	4.20	2.99	3.34	4.28	/
	10PIN	4.19	5.20	4.44	3.77	2.70	1.11	2.52	3.60	5.33	6.55
4	9PIN	2.63	2.31	4.75	3.46	1.19	1.49	2.88	2.40	2.86	/
	10PIN	3.02	2.46	1.99	1.57	1.48	2.23	2.57	4.10	3.48	5.12
5	9PIN	2.89	1.81	2.39	4.50	3.18	3.33	4.29	7.61	6.49	/
	10PIN	5.25	3.61	2.24	2.62	3.42	2.17	2.72	5.24	6.04	5.74
Specifition					Max	Min	Avg	Judgement		OK	
10mΩ/max					7.61	1.11	3.73				

1.2 Before Thermal Aging test for Shell

Sample No	测点1	测点2	测点3	测点4	测点5
#1	2.68	2.50	2.62	2.31	2.58
#2	1.81	3.63	2.17	1.78	1.66
#3	1.41	1.87	2.95	2.44	2.46
#4	2.02	1.85	1.42	1.72	1.29
#5	3.32	2.85	1.57	1.58	2.13

Specifition	Max	Min	Avg	Judgement	OK
10mΩ/max	3.63	1.29	2.18		

1.3 After Thermal Aging test for Contact

Sample No		1	2	3	4	5	6	7	8	9	10
1	9PIN	8.68	8.02	8.15	11.00	9.11	8.75	8.23	8.17	7.62	/
	10PIN	7.96	8.53	6.42	6.04	6.64	5.92	6.55	6.42	8.63	9.60
2	9PIN	5.58	6.82	4.80	4.12	6.52	9.61	5.20	4.41	7.15	/
	10PIN	6.92	4.20	8.48	5.58	6.90	7.42	5.51	6.13	4.93	9.58
3	9PIN	6.42	5.68	6.77	4.22	6.11	5.31	6.52	5.47	4.53	/
	10PIN	4.34	9.55	8.63	4..13	5.50	7.36	6.02	5.56	7.53	8.22
4	9PIN	7.33	5.61	4.42	8.20	4.52	7.00	7.74	6.66	7.18	/
	10PIN	6.24	7.21	6.58	6.27	6.53	5.67	5.13	9.42	7.31	6.91
5	9PIN	5.33	4.97	8.22	6.50	7.41	7.62	8.90	7.92	9.77	/
	10PIN	10.20	9.58	10.18	5.77	6.08	5.40	6.66	5.97	6.39	6.63
Specifition					Max	Min	Avg	Judgement		OK	
40mΩ/max					11.00	4.12	6.91				

1.4 After Thermal Aging test for Shell

Sample No	测点1	测点2	测点3	测点4	测点5
#1	4.94	3.76	2.70	3.62	3.69
#2	2.52	3.27	4.17	4.54	4.71
#3	3.48	2.16	3.27	3.50	4.33
#4	3.69	2.57	4.85	3.80	3.77
#5	4.15	4.34	3.89	3.72	4.01

Specifition	Max	Min	Avg	Judgement	OK
60mΩ/max	4.94	2.16	3.74		

Please refer to next page

2. Visual inspection

Test item	Visual inspection Before Test	Visual inspection Before Test
Spec:	No damage	No damage
Sample 1	Passed	Passed
Sample 2	Passed	Passed
Sample 3	Passed	Passed
Sample 4	Passed	Passed
Sample 5	Passed	Passed

Test Picture:

1.CR test:



2.Thermal Aging:



3.Visual Inspection:

Initial:



Final:



Note: Contact resistance Excluding conductor Resistance

Approved: zhangyanhai **Checked: Mengbinwen** **Operator: Mengxiling**

****

VAST ELECTRONICS CO.,LTD

Group L TEST REPORT

Report No.2015120111

Applicant: : QC Department
Test Item: Visual inspection→IR Reflow →Visual inspection
Product: HDMI CONNECTOR
Part No: 161012182
Quantity: 5PCS
Sample Received: 2015-12-1
Testing Period: 2015-12-2
Measuring Environment: Temperature.22+-2℃, R.H.58+-3%
Testing conditions: According to general HDMI's product specifications.
Solder Temp.: 260±5℃, 10±0.5sec.

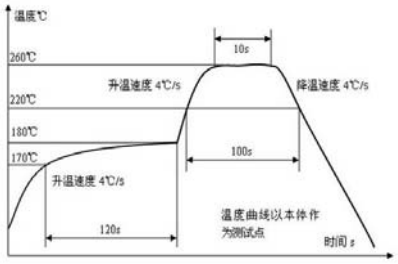

Sample No.:1,2,3,4,5.

Testing equipment:

Name	Model
REFLOW STOVE	IPC-710A

Testing Results:

Sample No. / SPEC	Crack	Discolor	Blister	Deformation	Oxidized	Judgement
1	Normal	Normal	Normal	Normal	Normal	PASSED
2	Normal	Normal	Normal	Normal	Normal	PASSED
3	Normal	Normal	Normal	Normal	Normal	PASSED
4	Normal	Normal	Normal	Normal	Normal	PASSED
5	Normal	Normal	Normal	Normal	Normal	PASSED

Test Picture:

1.Visual Inspection:



Approved: zhangyanhai **Checked: Mengbinwen** **Operator: Mengxiling**