RoHS | GP | HF

| REV. | ECR/N NO. | DESCRIPTION | DRAWN | DATE |
|---|---|---|---|---|
| A | / | NEW | MINGKANG.CHENG | 2022/04/08 |
| | | | | |
| | | | | |

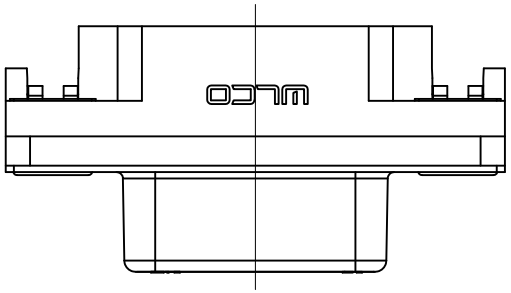

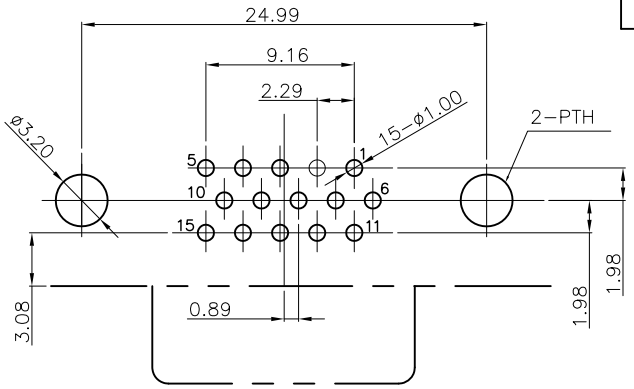


RECOMMENDED P.C.B LAYOUT(COMONENT SIDE)

THICKNESS:1.6mm(TOP VIEW) )DEFAULT TOLERANCE ±0.05

NOTES:
1.MATERIAL:
- 1.1 HOUSING: PBT UL94V-0 COLOUR:BLUE 661C
- 1.2 COVER: PBT UL94V-0 COLOUR:BLUE 661C
- 1.3 CONTACT: COPPER ALLOY
- 1.4 SHELL: SPCC
- 1.5 BOARDLOCK: SPCC
- 1.6 RIVET:COPPER ALLOY

2.PLATING:
- 2.1 CONTACT: Au/NI/SN
- 2.2 SHELL: CU/NI
- 2.3 BOARDLOCK:CU/NI/SN
- 2.4 RIVET: NI

3.SPECIFICATION:
- 3.1 CONTACT CURRENT RATING: 3 AMPS
- 3.2 CONTACT RESISTANCE: 30m OHM MAX
- 3.2 INSULATION RESISTANCE:1000M OHM MIN. AT 500V DC
- 3.3 DIELECTRIC WITHSTANDING VOLT:AC 500V(R.M.S)/1 MINUTE
- 3.4 INSERTION FORCE: 5.0KGF MAX
- 3.5 WITHDRAWAL FORCE: 1.5KGF MIN
- 3.6 DURABILITY: 1000 CYCLES
- 3.7 RECOMMENDED PROCESS: WAVE SOLDERING, PEAK TEMP 265+5°C, 5~10 SECONDS;

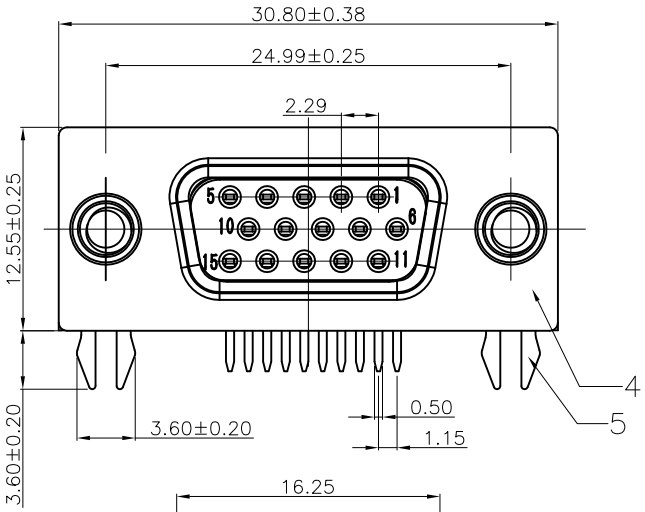


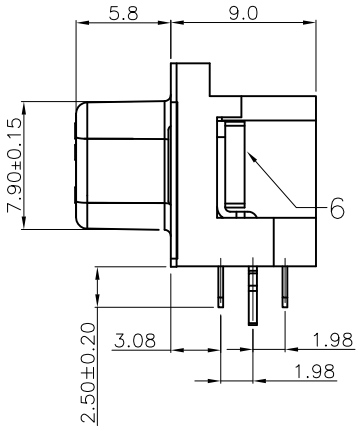


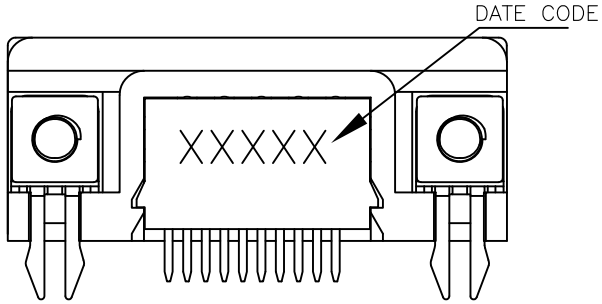


DATE/CODE:XXXXX
- DAY
- WEEK
- YEAR

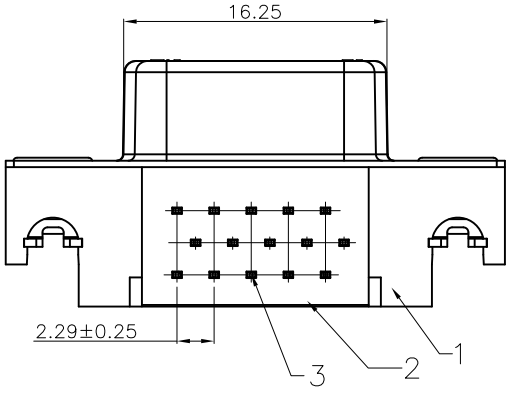


| TOLERANCE | MODEL NAME: HDR 15每3.08铆合 PBT蓝胶 UL94V-0 SPCC外壳 端子音叉式 半金Gold Flash针长2.5mm SS鱼叉 吸塑包装 | | | | DRAWN: MINGKANG.CHENG |
|---|---|---|---|---|---|
| X.X ±0.35<br>X.XX ±0.25<br>X.XXX ±0.10<br>ANGLE ±2.0° | MODEL NO: WLHD-345M | | | | CHECKED: XIAOTAO.WU |
| | UNIT: | SCALE: | REVISION: | SHEET | APPROVED: HUAMING.WU |
| | mm | 1:1 | A | 1/1 | DATE: 2022/04/08 |
| | WLCO 深圳市兴万联电子有限公司 SHENZHEN XING WAN LIAN ELECTRONICS CO.,LTD. | | | | DWG NO:C-WLHD-345M-01 |
| | | | | | FILE: C |

RoHS | GP | HF

| REV. | ECR/N NO. | DESCRIPTION | DRAWN | DATE |
|---|---|---|---|---|
| A | / | NEW | MINGKANG.CHENG | 2022/04/08 |
| | | | | |
| | | | | |

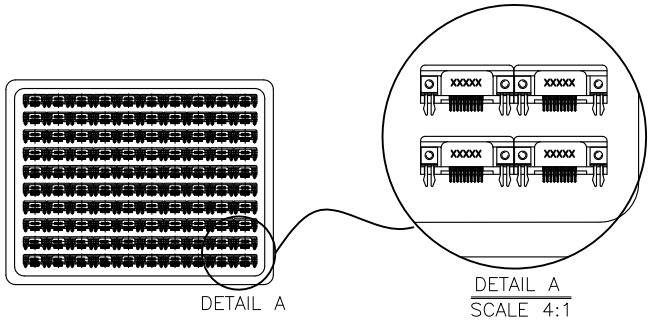


1.产品按图示方向放置，
100PCS/盘;

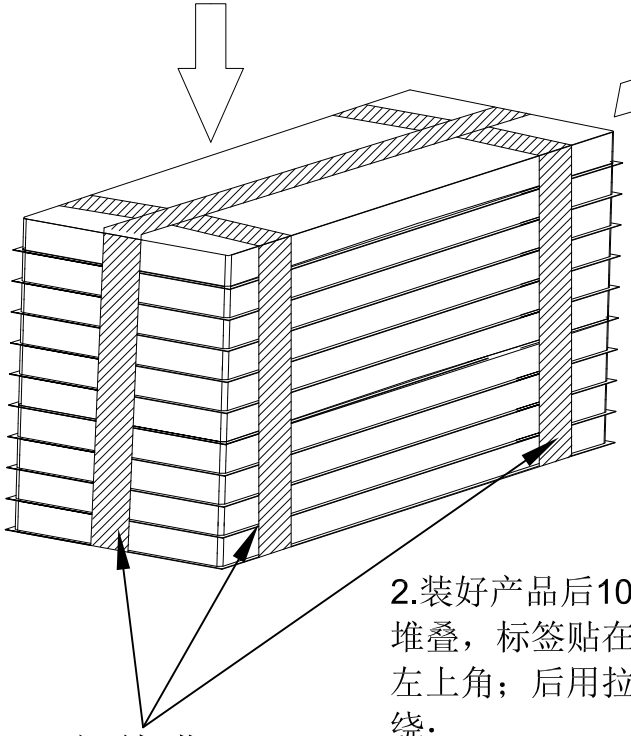

拉伸膜

2.装好产品后10盘按相同方向堆叠，标签贴在最上层吸塑盒左上角；后用拉伸膜工字形缠绕;

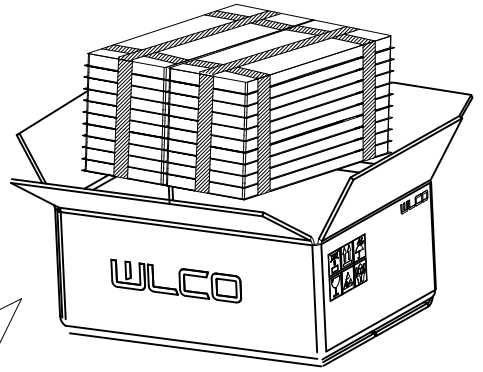


3.将缠好的产品放入纸箱中；共2000PCS/箱

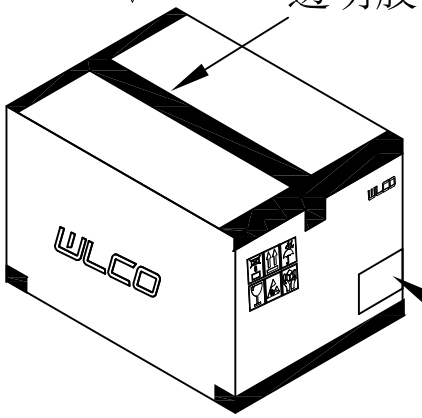


4.确认数量OK后用透明胶工字形封好纸箱，并贴上标签；

| | | | | |
|---|---|---|---|---|
| TOLERANCE<br>X.X ±0.35<br>X.XX ±0.25<br>X.XXX ±0.15<br>ANGLE ±1.0° | MODEL NAME: HDR 15母3.08铆合 PBT蓝胶 UL94V-0 SPCC外壳 端子 音叉式半金Gold Flash针长2.5mm SS鱼叉 吸塑包装 | | | DRAWN: MINGKANG.CHENG |
| | MODEL NO: WLHD-345M | | | CHECKED: WUXIAO.TAO |
| | UNIT: mm | SCALE: 1:1 | REVISION: A / SHEET 1/1 | APPROVED: HUAMING.WU |
| | | | | DATE: 2022/04/08 |
| | WLCO 深圳市兴万联电子有限公司 SHENZHEN XING WAN LIAN ELECTRONICS CO.,LTD. | | | DWG NO: P-WLHD-345M-01 |
| | | | | FILE: P |