





設計驗證
工程課
2024-07-31
發行
宏緯科技開發股份有限公司

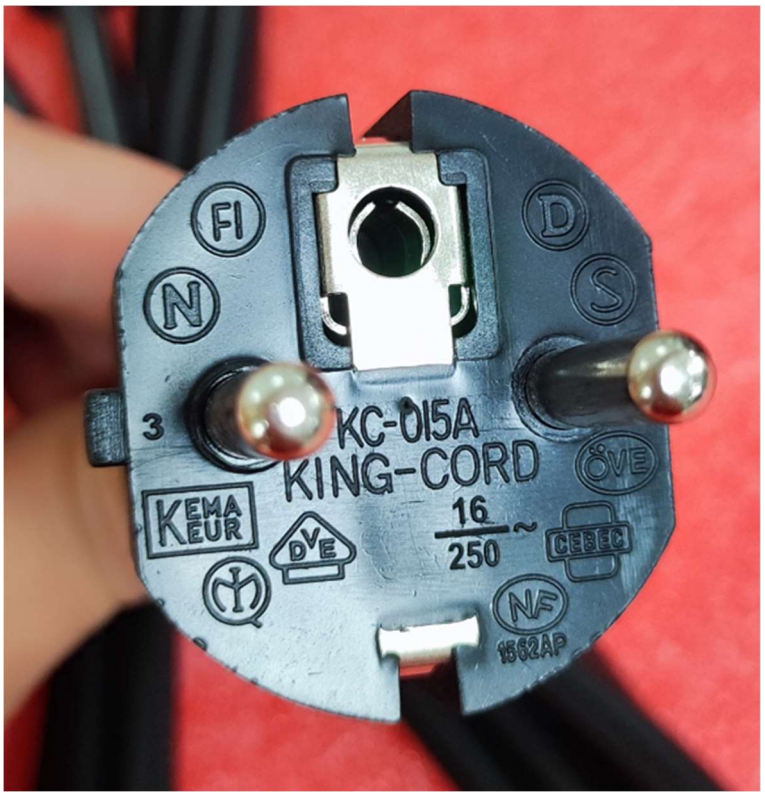



設計驗證
工程課
2024-07-31
發行
鈺鑽科技開發股份有限公司

SPECIFICATION

KING-CORD

APPROVED

☑ **HEAD OFFICE & FACTORY:**
KING-CORD CO., LTD
NO. 52-5,Sia Si Hu,Shang Hu Village,
Yang Mei Township,
Tao Yuan County TAIWAN
TEL: 886-3-472-6208
FAX: 886-3-472-7751

☑ **FACTORY:**
KING-CORD ELECTRONICS (SHEN ZHEN) CO.,LTD
No.B2,The West Industry Park of Tan Tou,
Song Gang Town Bao'an District,
Shen Zhen City Guangdong CHINA
TEL: 86-755-2768-2890
FAX: 86-755-2768-2897

RoHS Compliant

KING-CORD Confidential Proprietary

CUSTOMER NAME:	鈺緯
CUSTOMER P/NO:	**3KP0000015A** (K0945)
KING-CORD/NO:	**K5A031H6300BYD-L**
EDITION:	**E**

CUSTOMER APPR	APPR	CHECK	MADE
設計驗證 工程課 2024 -07- 31 發行 鈺緯科技開發股份有限公司			*LI YONGHUAN*

INDEX

1 Product Drawing

2 Plug Drawing

3 Connector Drawing

4 Sample Testing Standard

5 Safety Approval For Product

6 The Schedule For The Environment Material Management

7 COC

KING-CORD
Confidential Proprietary

Safety Certificates	
KC-015A:	
KC-003:	N13389

設計驗證
工程課
2024-07-31
發行
鈺緯科技開發股份有限公司

RoHS Compliant

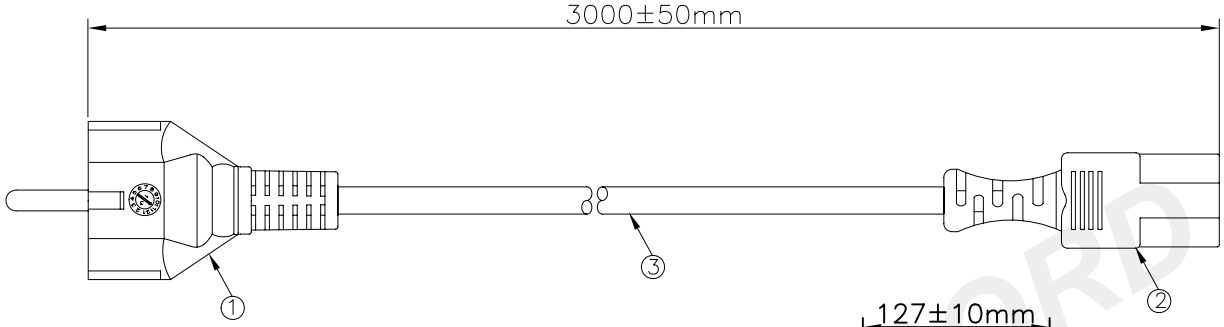

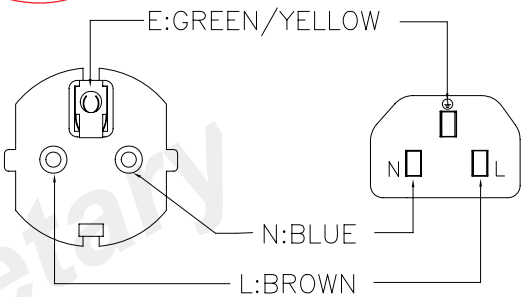

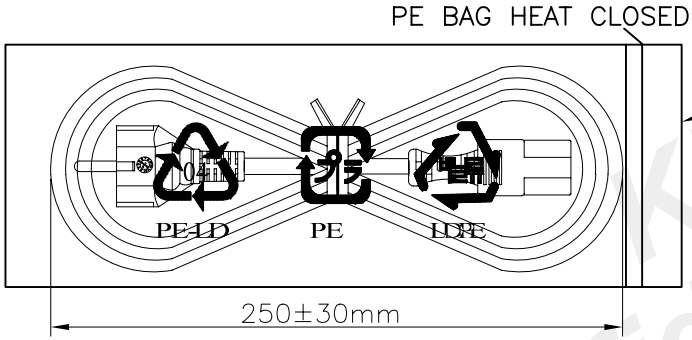

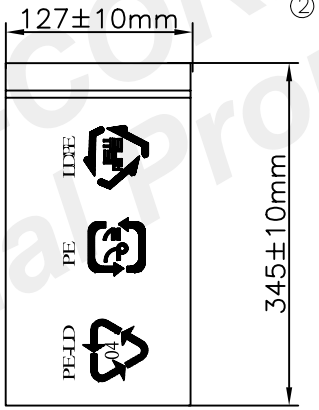



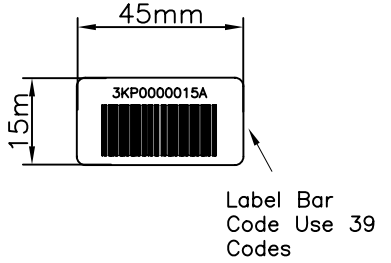

This product does not contain red phosphorus

RECORD OF CHANGE

DATE	REV	DESCRIPTION OF CHANGE
OCT.16.2017	A	NEW PRODUCT
APR.16.2019	B	1.CHANGE KING-CORD NUMBER K5A031H6300BR TO K5A031H6300BPA.
		2.CHANGE OF PACKING METHOD.
JUN.19.2019	C	Change KING-CORD material number from K5A031H6300BPA to K5A031H6300BYD-L
NOV.29.2019	D	Change the printing content of I-sheng power line
OCT.12.2023	E	KC-003 ACCORDING TO SAFETY REGULATIONS, DELETE THE WORD "S" FROM THE CCC LOGO

NO:	DESCRIPTION	Q'TY	REMARK
1	Plug:KC-015A,16A 250V~(IEC 60884-1)	1PC	BLACK
2	Connector:KC-003,10A 250V~(EN 60320 C13)	1PC	BLACK
3	Cable:H05VV-F 3G 1.0mm²	1PC	BLACK

UNIT:mm

NOTES:

CUSTOMER NAME: 鈺緯

CUSTOMER NO.: 3KP0000015A (K0945)

KING-CORD NO.: K5A031H6300BYD-L

KING-CORD CO.,LTD.

KING-CORD Confidential Proprietary

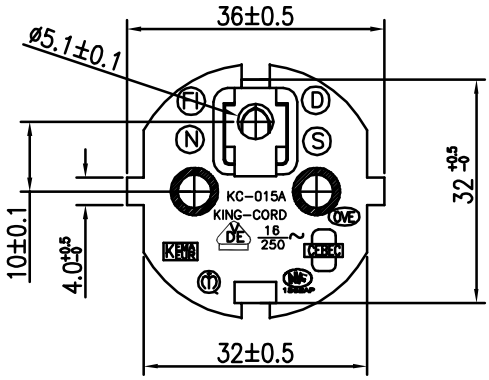

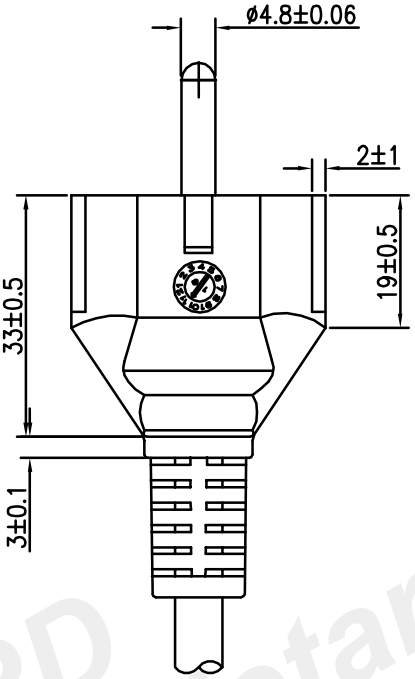

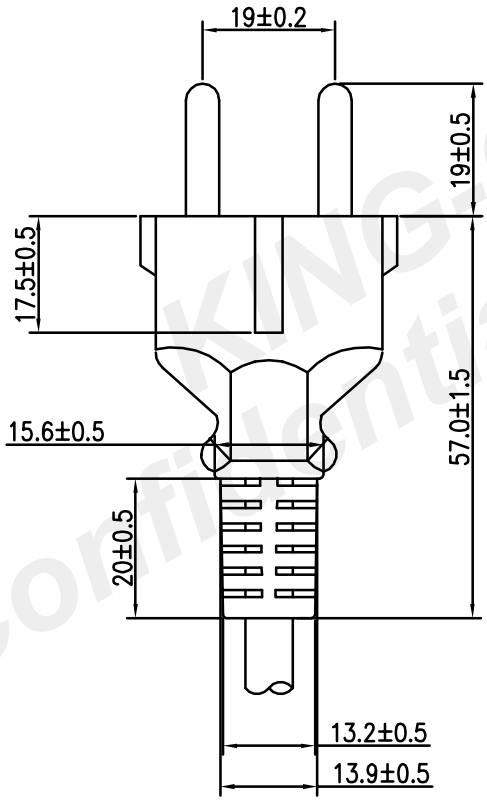

KING-CORD
Confidential Proprietary

B	ADD SIGN OF THE YEAR AND THE MOUTH	10.04.23
A	NEW	08.03.20
REV	DESCRIPTION	DATE

Drawer	guozl	Unite	mm	Date	2010.04.23
Scale	1/1	Current	16A 250V~	Drawing No	KC-015A

KING-CORD CO.,LTD.

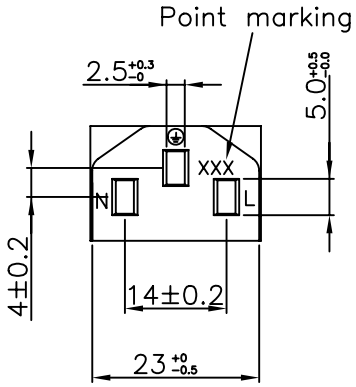

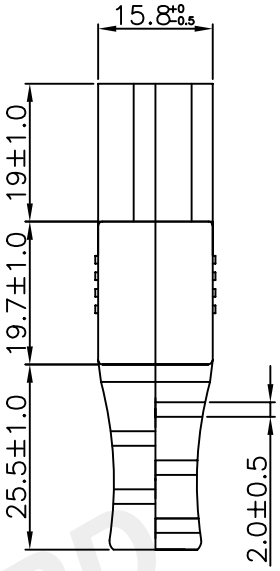

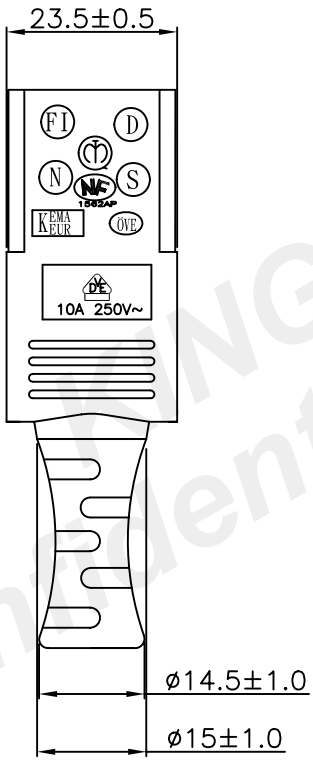

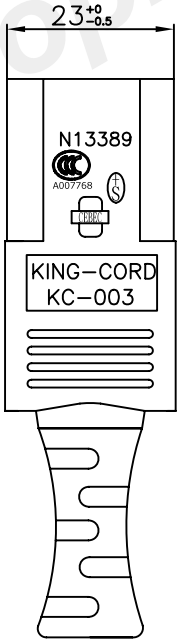

KING-CORD
Confidential Proprietary

B	ACCORDING TO SAFETY REGULATIONS, DELETE THE WORD "S" FROM THE CCC LOGO	23.08.22
A	NEW	08.11.08
REV	DESCRIPTION	DATE

Drawer	chen	Unite	mm	Date	2023.08.22
Scale	1/1	Current	10A 250V~	Drawing No	KC−003

KING−CORD CO.,LTD.

1.Scope:

This specification is applied to H05VV-F 3G 1.0mm^2 power cord.

2.Applicable Safety Standard

IEC 60884-1

EN 60320 C13

3.Construction:

3.1 Plug : Catalogue No. KC-015A(EUROPE type)

3.2 Connector : Catalogue No. KC-003(EUROPE type)

3.3 Flexible Cord Approved Manufacturers

Manufacturer	VDE File NO	Flexible cord
I-SHENG	40006070	H05VV-F
KING-CORD	40042910	

3.4 PVC Flexible Cord

TYPES	CONDUCTOR		CORE	INSULATION	JACKET	OVERALL	RATING		
				MIN THICKNESS	MIN THICKNESS	DIAMETER	Voltage	Temp.	Current
	mm^2	NO./mm		mm	mm	mm	V	℃	A
H05VV-F	1.00	32/0.192+/-0.008	3	0.6	0.8	6.9±0.15	300/500	70	10
IN CASE OF DISPUTE, CONDUCTOR RESISTANCE SHALL BE THE REFEREE METHOD									

H6 (H05VV-F 3G1.0mm^2)

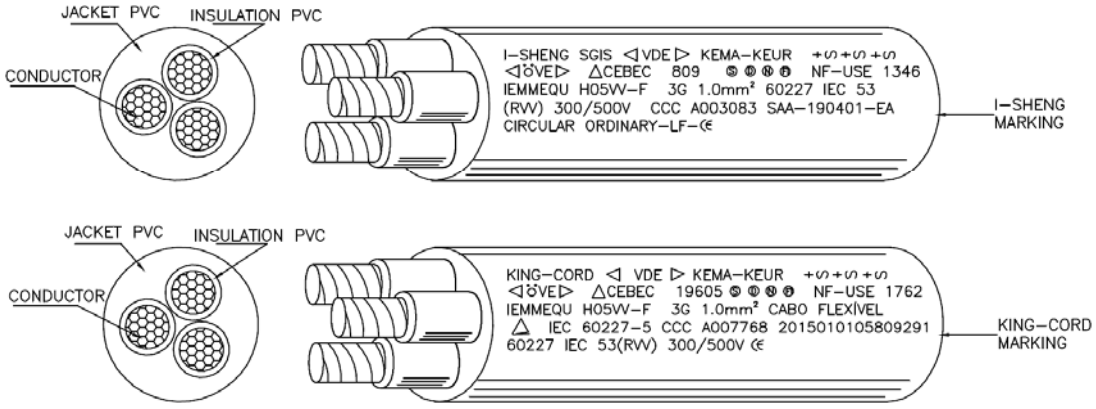

KING CORD Confidential Proprietary

VDE Prüf- und Zertifizierungsinstitut

ZEICHENGENEHMIGUNG
MARKS APPROVAL

I-Sheng Electric Wire & Cable Co., Ltd.
52 Tin Hwu Road, Ta Hua Village
33334 GWAI SAN, TAOYUAN HSIEN
TAIWAN

ist berechtigt, für ihr Produkt /
is authorized to use for their product

Starkstromleitungen für allgemeine Anwendungen
- Flexible Leitungen
mit thermoplastischer PVC-Isolierung
Cables for general applications
- Flexible cables with
thermoplastic PVC insulation

die hier abgebildeten markenrechtlich geschützten Zeichen
für die ab Blatt 2 aufgeführten Typen zu benutzen /
the legally protected Marks as shown below for the types referred to on page 2 ff.

◁VDE▷ oder/*or* ◁▷ oder/*or* 

Geprüft und zertifiziert nach /
Tested and certified according to

DIN EN 50525-2-11 (VDE 0285-525-2-11):2012-01; EN 50525-2-11:2011

Aktenzeichen: 1276303-5140-0005 / 170954
File ref.:

VDE Prüf- und Zertifizierungsinstitut GmbH
VDE Testing and Certification Institute
Zertifizierungsstelle / *Certification*

Ausweis-Nr. 40006070 Blatt 1
Certificate No. *Page*

Weitere Bedingungen siehe Rückseite und Folgeblätter /
further conditions see overleaf and following pages

Offenbach, 2003-04-25
(letzte Änderung/updated 2012-10-12)

S. Berber

VDE Zertifikate sind nur gültig bei Veröffentlichung unter:
VDE certificates are valid only when published on:
http://www.vde.com/zertifikat
http://www.vde.com/certificate

VDE

Name und Sitz des Genehmigungs-Inhabers / *Name andregistered seat of the Certificate holder*
I-Sheng Electric Wire & Cable Co., Ltd., 52 Tin Hwu Road, Ta Hua Village, 33334 GWAI SAN, TAOYUAN HSIEN, TAIWAN

Aktenzeichen / *File ref.*
1276303-5140-0005 / 170954 / FG42 / HEG

letzte Änderung / *updated* 2012-10-12
Datum / *Date* 2003-04-25

Dieses Blatt gilt nur in Verbindung mit Blatt 1 des Zeichengenehmigungsausweises Nr. 40006070
This supplement is only valid in conjunction with page 1 of the Certificate No. 40006070.

Starkstromleitungen für allgemeine Anwendungen
- Flexible Leitungen
mit thermoplastischer PVC-Isolierung
Cables for general applications
- Flexible cables with
thermoplastic PVC insulation

Typ(en) / *Type(s)*:

H03VV-F 2...3 x 0,5...0,75 mm²	+
H03VVH2-F 2 x 0,5...0,75 mm²	+
H05VV-F 2...5 x 0,75..2,5 mm²	+
H05VVH2-F 2 X 0,75...1,0 mm²	+

Leitungsbauart *Type of cable*	Standardleitungen *General purpose cables*
Firmenzeichen *Trademark*	I-SHENG SGIS

Dieser Zeichengenehmigungs-Ausweis bildet eine Grundlage für die EG-Konformitätserklärung und CE-Kennzeichnung durch den Hersteller oder dessen Bevollmächtigten und bescheinigt die Konformität mit den grundlegenden Schutzanforderungen der **EG-Niederspannungsrichtlinie 2006/95/EG** mit ihren Änderungen.
*This Marks Approval is a basis for the EC Declaration of Conformity and the CE Marking by the manufacturer or his agent and proves the conformity with the essential safety requirements of the **EC Low-Voltage Directive 2006/95/EC** including amendments.*

VDE Prüf- und Zertifizierungsinstitut GmbH
VDE Testing and Certification Institute
Fachgebiet FG42
Section FG42

KING-CORD Confidential Proprietary

VDE Prüf- und Zertifizierungsinstitut
Zeichengenehmigung

Ausweis-Nr. / Certificate No. 40006070

Beiblatt / Supplement

Name und Sitz des Genehmigungs-Inhabers / *Name andregistered seat of the Certificate holder*
I-Sheng Electric Wire & Cable Co., Ltd., 52 Tin Hwu Road, Ta Hua Village, 33334 GWAI SAN, TAOYUAN HSIEN, TAIWAN

Aktenzeichen / *File ref.*
1276303-5140-0005 / 170954 / FG42 / HEG

letzte Änderung / *updated* 2012-10-12

Datum / *Date* 2003-04-25

Dieses Beiblatt ist Bestandteil des Zeichengenehmigungsausweises Nr. 40006070.
This supplement is part of the Certificate No. 40006070.

Starkstromleitungen für allgemeine Anwendungen
- Flexible Leitungen
mit thermoplastischer PVC-Isolierung
Cables for general applications
- Flexible cables with
thermoplastic PVC insulation

Fertigungsstätte(n)
Place(s) of manufacture

Referenz/*Reference*	
30006550	I-Sheng Mfg (Song Gang) Factory Tang Xiayong Road Songgang Town 518105 BAOAN AREA, SHENZHEN Guangdong CHINA

VDE Prüf- und Zertifizierungsinstitut GmbH
VDE Testing and Certification Institute
Fachgebiet FG42
Section FG42

KING-CORD
Confidential Proprietary

VDE Prüf- und Zertifizierungsinstitut
Zeichengenehmigung

Ausweis-Nr. / Certificate No. 40006070

Infoblatt / Info sheet

Name und Sitz des Genehmigungs-Inhabers / *Name andregistered seat of the Certificate holder*
I-Sheng Electric Wire & Cable Co., Ltd., 52 Tin Hwu Road, Ta Hua Village, 33334 GWAI SAN, TAOYUAN HSIEN, TAIWAN

Aktenzeichen / *File ref.*	letzte Änderung / *updated*	Datum / *Date*
1276303-5140-0005 / 170954 / FG42 / HEG	2012-10-12	2003-04-25

Dieses Blatt gilt nur in Verbindung mit Blatt 1 des Zeichengenehmigungsausweises Nr. 40006070
This supplement is only valid in conjunction with page 1 of the Certificate No. 40006070.

Genehmigung zum Benutzen des auf Seite 1 abgebildeten markenrechtlich geschützten Zeichens des VDE:

Grundlage für die Benutzung sind die Allgemeinen Geschäftsbedingungen (AGB) der VDE Prüf- und Zertifizierungsinstitut GmbH (www.vde.com\AGB-Institut). Das Recht zur Benutzung erstreckt sich nur auf die bezeichnete Firma mit den genannten Fertigungsstätten und die oben aufgeführten Produkte mit den zugeordneten Bezeichnungen. Die Fertigungsstätte muss so eingerichtet sein, dass eine gleichmäßige Herstellung der geprüften und zertifizierten Ausführung gewährleistet ist.
Die Genehmigung ist so lange gültig wie die VDE-Bestimmungen gelten, die der Zertifizierung zugrunde gelegen haben, sofern sie nicht auf Grund anderer Bedingungen aus der VDE Prüf- und Zertifizierungsordnung (PM102) zurückgezogen werden muss.
Der Gültigkeitszeitraum einer VDE-GS-Zeichengenehmigung kann auf Antrag verlängert werden. Bei gesetzlichen und / oder normativen Änderungen kann die VDE-GS-Zeichengenehmigung ihre Gültigkeit zu einem früheren als dem angegebenen Datum verlieren.
Produkte, die das Biozid Dimethylfumarat (DMF) enthalten, dürfen gemäß der Kommissionsentscheidung 2009/251/EG nicht mehr in den Verkehr gebracht oder auf dem Markt bereitgestellt werden.
Der VDE-Zeichengenehmigungsausweis wird ausschließlich auf der ersten Seite unterzeichnet.

Approval to use the legally protected Mark of the VDE as shown on the first page:
Basis for the use are the general terms and conditions of the VDE Testing and Certification Institute (www.vde.com\terms-institute). The right to use the mark is granted only to the mentioned company with the named places of manufacture and the listed products with the related type references. The place of manufacture shall be equipped in a way that a constant manufacturing of the certified construction is assured.
The approval is valid as long as the VDE specifications are in force, on which the certification is based on, unless it is withdrawn according to the VDE Testing and Certification Procedure (PM102E).
The validity period of a VDE-GS-Mark Approval may be prolonged on request. In case of changes in legal and / or normative requirements, the validity period of a VDE-GS-Mark Approval may be shortened.
Products containing the biocide dimethylfumarate (DMF) may not be marketed or made available on the EC market according to the Commission Decision 2009/251/EC.
The approval is solely signed on the first page.

KING-CORD Confidential Proprietary

VDE Prüf- und Zertifizierungsinstitut

ZEICHENGENEHMIGUNG
MARKS APPROVAL

King Cord Co., Ltd.
8F-3 No. 124 Sianjheng 3rd. Rd.
302 JHUBEI CITY, HSINCHU COUNTRY
TAIWAN

ist berechtigt, für ihr Produkt /
is authorized to use for their product

Starkstromleitungen für allgemeine Anwendungen
- Flexible Leitungen
mit thermoplastischer PVC-Isolierung

Cables for general applications
- Flexible cables with
thermoplastic PVC insulation

die hier abgebildeten markenrechtlich geschützten Zeichen
für die ab Blatt 2 aufgeführten Typen zu benutzen /
the legally protected Marks as shown below for the types referred to on page 2 ff.

◁VDE▷ oder/*or* ◁>ɑɯ▷ oder/*or* 

Geprüft und zertifiziert nach /
Tested and certified according to

DIN EN 50525-2-11 (VDE 0285-525-2-11):2012-01; EN 50525-2-11:2011

Aktenzeichen: 1384300-5140-0005 / 216433
File ref.:

VDE Prüf- und Zertifizierungsinstitut GmbH
VDE Testing and Certification Institute
Zertifizierungsstelle / *Certification*

Ausweis-Nr. 40042910 Blatt 1
Certificate No. *Page*

Weitere Bedingungen siehe Rückseite und Folgeblätter /
further conditions see overleaf and following pages

Offenbach, 2015-08-31
(letzte Änderung / updated 2015-09-30)

M. Tasotti

VDE Zertifikate sind nur gültig bei Veröffentlichung unter:
VDE certificates are valid only when published on:

http://www.vde.com/zertifikat
http://www.vde.com/certificate

VDE

VDE Prüf- und Zertifizierungsinstitut
Zeichengenehmigung

Name und Sitz des Genehmigungs-Inhabers / *Name and registered seat of the Certificate holder*
King Cord Co., Ltd., 8F-3 No. 124 Sianjheng 3rd. Rd., 302 JHUBEI CITY, HSINCHU COUNTRY, TAIWAN

Aktenzeichen / *File ref.*
1384300-5140-0005 / 216433 / CC5 / HEG

letzte Änderung / *updated*
2015-09-30

Datum / *Date*
2015-08-31

Dieses Blatt gilt nur in Verbindung mit Blatt 1 des Zeichengenehmigungsausweises Nr. 40042910.
This supplement is only valid in conjunction with page 1 of the Certificate No. 40042910.

Starkstromleitungen für allgemeine Anwendungen - Flexible Leitungen mit thermoplastischer PVC-Isolierung

Cables for general applications - Flexible cables with thermoplastic PVC insulation

Typ(en) / *Type(s)*

H03VV-F 2...3 x 0,5...0,75 mm²	+
H03VVH2-F 2 x 0,5...0,75 mm²	+
H05VV-F 2...3 x 0,75...2,5 mm²	+
H05VVH2-F 2 x 0,75...1,0 mm²	+

Leitungsbauart *Type of cable*	Standardleitungen *General purpose cables*
Firmenzeichen *Trademark*	KING-CORD

KING-CORD Confidential Proprietary

Dieser Zeichengenehmigungs-Ausweis bildet eine Grundlage für die EG-Konformitätserklärung und CE-Kennzeichnung durch den Hersteller oder dessen Bevollmächtigten und bescheinigt die Konformität mit den grundlegenden Schutzanforderungen der **EG-Niederspannungsrichtlinie (2006/95/EG bis 19.04.2016, 2014/35/EU ab 20.04.2016).**
This Marks Approval is a basis for the EC Declaration of Conformity and the CE Marking by the manufacturer or his agent and proves the conformity with the essential safety requirements of the ***EC Low-Voltage Directive (2006/95/EC until 2016-04-19, 2014/35/EU from 2016-04-20).***

VDE Prüf- und Zertifizierungsinstitut GmbH
VDE Testing and Certification Institute
Fachgebiet CC5
Section CC5

VDE Prüf- und Zertifizierungsinstitut
Zeichengenehmigung

Ausweis-Nr. / *Certificate No.*
40042910

Beiblatt / *Supplement*

Name und Sitz des Genehmigungs-Inhabers / *Name and registered seat of the Certificate holder*
King Cord Co., Ltd., 8F-3 No. 124 Sianjheng 3rd. Rd., 302 JHUBEI CITY, HSINCHU COUNTRY, TAIWAN

Aktenzeichen / *File ref.*
1384300-5140-0005 / 216433 / CC5 / HEG

letzte Änderung / *updated*
2015-09-30

Datum / *Date*
2015-08-31

Dieses Beiblatt ist Bestandteil des Zeichengenehmigungsausweises Nr. 40042910.
This supplement is part of the Certificate No. 40042910.

Starkstromleitungen für allgemeine Anwendungen - Flexible Leitungen mit thermoplastischer PVC-Isolierung

Cables for general applications - Flexible cables with thermoplastic PVC insulation

Fertigungsstätte(n)
Place(s) of manufacture

Referenz/*Reference*	
30013100	King-Cord Electronics (Shenzhen) Co., Ltd. No. B2 The West Industry Park of TanTou, Song Gang Town 518105 BAO-AN DISTRICT, SHENZHEN CITY Guangdong CHINA

VDE Prüf- und Zertifizierungsinstitut GmbH
VDE Testing and Certification Institute
Fachgebiet CC5
Section CC5

KING-CORD Confidential Proprietary

VDE Prüf- und Zertifizierungsinstitut
Zeichengenehmigung

Ausweis-Nr. / *Certificate No.* 40042910

Infoblatt / *Info sheet*

Name und Sitz des Genehmigungs-Inhabers / *Name and registered seat of the Certificate holder*
King Cord Co., Ltd., 8F-3 No. 124 Sianjheng 3rd. Rd., 302 JHUBEI CITY, HSINCHU COUNTRY, TAIWAN

Aktenzeichen / *File ref.*	letzte Änderung / *updated*	Datum / *Date*
1384300-5140-0005 / 216433 / CC5 / HEG	2015-09-30	2015-08-31

Dieses Blatt gilt nur in Verbindung mit Blatt 1 des Zeichengenehmigungsausweises Nr. 40042910.
This supplement is only valid in conjunction with page 1 of the Certificate No. 40042910.

Genehmigung zum Benutzen des auf Seite 1 abgebildeten markenrechtlich geschützten Zeichens des VDE:

Grundlage für die Benutzung sind die Allgemeinen Geschäftsbedingungen (AGB) der VDE Prüf- und Zertifizierungsinstitut GmbH (www.vde.com\AGB-Institut). Das Recht zur Benutzung erstreckt sich nur auf die bezeichnete Firma mit den genannten Fertigungsstätten und die oben aufgeführten Produkte mit den zugeordneten Bezeichnungen. Die Fertigungsstätte muss so eingerichtet sein, dass eine gleichmäßige Herstellung der geprüften und zertifizierten Ausführung gewährleistet ist.
Die Genehmigung ist so lange gültig wie die VDE-Bestimmungen gelten, die der Zertifizierung zu- grunde gelegen haben, sofern sie nicht auf Grund anderer Bedingungen aus der VDE Prüf- und Zertifizierungsordnung (PM102) zurückgezogen werden muss.
Der Gültigkeitszeitraum einer VDE-GS-Zeichengenehmigung kann auf Antrag verlängert werden. Bei gesetzlichen und / oder normativen Änderungen kann die VDE-GS-Zeichengenehmigung ihre Gültigkeit zu einem früheren als dem angegebenen Datum verlieren.
Produkte, die das Biozid Dimethylfumarat (DMF) enthalten, dürfen gemäß der Kommissionsent- scheidung 2009/251/EG nicht mehr in den Verkehr gebracht oder auf dem Markt bereitgestellt werden.
Der VDE-Zeichengenehmigungsausweis wird ausschließlich auf der ersten Seite unterzeichnet.

Approval to use the legally protected Mark of the VDE as shown on the first page:
Basis for the use are the general terms and conditions of the VDE Testing and Certification Institute (www.vde.com\terms-institute). The right to use the mark is granted only to the mentioned company with the named places of manufacture and the listed products with the related type references. The place of manufacture shall be equipped in a way that a constant manufacturing of the certified construction is assured.
The approval is valid as long as the VDE specifications are in force, on which the certification is based on, unless it is withdrawn according to the VDE Testing and Certification Procedure (PM102E).
The validity period of a VDE-GS-Mark Approval may be prolonged on request. In case of changes in legal and / or normative requirements, the validity period of a VDE-GS-Mark Approval may be shortened.
Products containing the biocide dimethylfumarate (DMF) may not be marketed or made available on the EC market according to the Commission Decision 2009/251/EC.
The approval is solely signed on the first page.

King Cord Co. Ltd. Proprietary

No.	Items	Conditions for Test測試條件	Specification判定規格
1	Insulation Resistance 絕緣阻抗 (IEC884 C17 OR IEC320 C15)	A quantity of No.7 lead drop shot is to be placed in a container,Apply a voltage of 500V DC for 1 min. at an ambient temperature of 25±5 ,between: A)Live parts of opposite polarity B)Live parts and ground or contact with ground afer which the measurement shall be made. Show below as: Megohmmeter 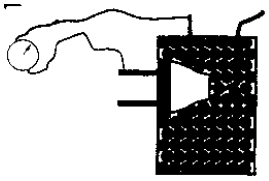	5M or more
2	Dielectric Strength 電氣強度 (IEC884 C17 OR IEC320 C15)	The test potential is to be supplied from a 500VA or large capacity testing transformer,and be increased from zero until 2000V(in fact,required 1250V) is reached,then held at the voltage for 1min.Current leakage 2mA. A)Live parts of opposite polarity B)Live parts and ground or contact with ground C)Between conductor and outside body Frequency:50/60Hz 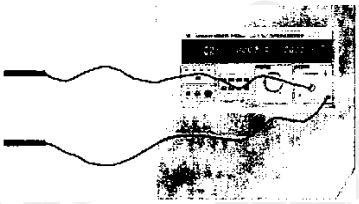	Without breakdown or flashover
	Moisture Resistance (IEC884 C16.3 OR IEC320 C14)	The humidity cabinet can be used. Relative humidity:91%-95% Temperature: 20-30 The specimens are kept in the cabinet for -168h(7 days) for connector with earthing contact,and for appliance inlets with earthing accessories,not incorporated in other equipment -48h(2 days) in all other cases.	After this treament, the specimen shall be withstand dieletric strength
	Temperature Rise 溫升測試 (IEC884 C19 OR IEC320 C21)	Test current:1.25 times rated cur Test time for1h Contact show in below: 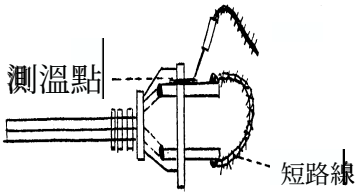	The temperature rise of the terminals and contact is no more than 45K
	Contact Resistance 接觸阻抗 (IEC884 C11.5)	Insert the cord connector straight into the receptacle, measurement shall be made between the connector and the receptacle only.Test current :1A DC. Ambient temperature :25±5.Insert the cord connector into the receptacle as shown below ,and measure the contact resistance by the voltage drop method. 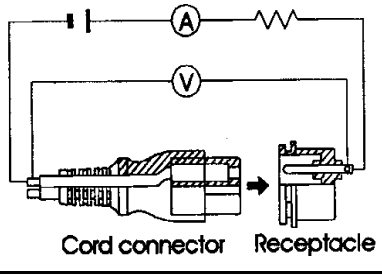	No more than 50m

Confidential Proprietary

<table>
<tr><th>No.</th><th>Items項目</th><th>Conditions for Test測試條件</th><th>Specification判定規格</th></tr>
<tr>
<td>6</td>
<td>Withdraw Force
拔插力
(IEC320 C16)</td>
<td>Withdraw the connector straight into the standard guage (mating plug),First The connector is inserted to the full depth into and withdraw from the appropriate appliance inlet 10 times,It is then again inserted for a principal mass is such that it exerts a force equal specified in the table .Verification of the minimum withdraw force is applied to each connector,the total mass of pplicable force as show
<table>
<tr><th rowspan="2">Type</th><th colspan="3">Withdraw force N(Kg)</th></tr>
<tr><th colspan="2">Multi-Pin guage</th><th>Single-Pin guage</th></tr>
<tr><th></th><th>Maximum</th><th>Minimum</th><th>Minimum</th></tr>
<tr><td>0.2A~2.5A</td><td>50(5.1)</td><td>13(1.3)</td><td>1.5(0.15)</td></tr>
<tr><td>>2.5A~6A</td><td>50(5.1)</td><td>13(1.3)</td><td>1.5(0.15)</td></tr>
<tr><td>>6A~10A</td><td>50(5.1)</td><td>13(1.3)</td><td>1.5(0.15)</td></tr>
<tr><td>>10A~16A</td><td>60(6.1)</td><td>15(1.5)</td><td>2.0(0.20)</td></tr>
<tr><td>>16A~32A</td><td>80(8.1)</td><td>30(3.1)</td><td>3.0(0.3)</td></tr>
</table>
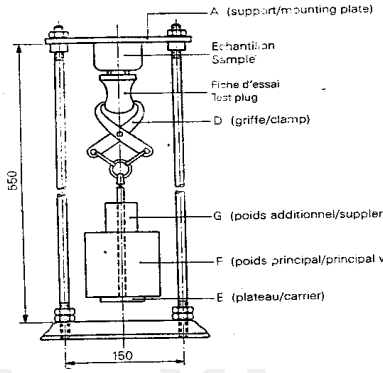

</td>
<td>During the verification of the maximum withdraw force test,The principal mass is hung on the connector without jolting and the supplementary mass is allowed to fall from a height of 5cm on to the principal mass,the connector shall not remain in the appliance After verification of the minimum withdraw force test,the gauge shall be not removed 0.079inch(2mm).During the single-pin gauge test,the gauge shall not fall from the contact assembly without 3sec.</td>
</tr>
<tr>
<td>7</td>
<td>Flexing Test
彎曲測試
(IEC884 C23.4 OR IEC320 C22.4)</td>
<td>A molded-on attachment plug and cord connector shall be capable withstanding the test specified as show in the table: molded to 20inch(508mm) lengths of flexible cord is required,and each cord approximately 12 inches(305mm) from the point of rotation to the weight,see fig 94.1
<table>
<tr><th>Cord type (mm²)</th><th>Load weight (g)</th><th>Angle (°)</th><th>Frequency (turns)</th><th>Flexing No. for connector (turms)</th><th>Flexing No. for plug</th></tr>
<tr><td>other</td><td>10N(1020g)</td><td>45°</td><td>60r/min</td><td>20000</td><td>10000</td></tr>
<tr><td>>0.75</td><td>20N(2040g)</td><td>45°</td><td>60r/min</td><td>20000</td><td>10000</td></tr>
</table>
A sample shall be secured to the flexing apparatus as below:
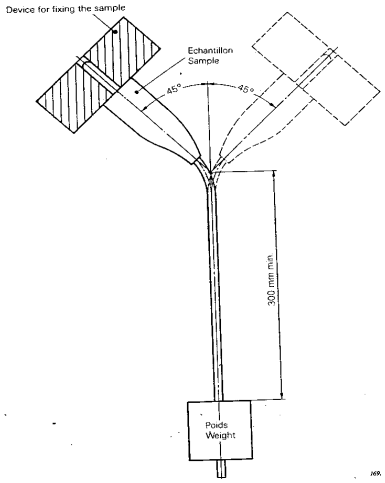

</td>
<td>After the test the sample
shall be no damage or breakage</td>
</tr>
</table>

<table>
<tr><th>No.</th><th>Items項目</th><th>Conditions for Test測試條件</th><th>Specification判定規格</th></tr>
<tr><td>8</td><td>Heat Pressure Test
球壓測試
(IEC884 C25.2 OR IEC320 C24.1)</td><td>A ball pressure test is made in a heating cabinet at a temperature of 125±2℃ and applied a steel ball of 5mm diameter against this sample surface with a force of 20N.after 1 hour,the tested ample
is cooled down within 10 seconds.see as following fig.:
 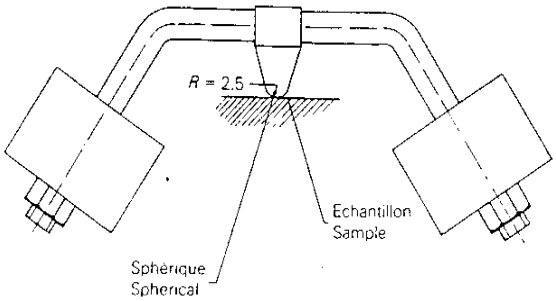
</td><td>the diameter of the impression caused by the ball shall not exceed 2 mm</td></tr>
<tr><td>9</td><td>Anchorage Test
錨錠測試
(IEC884 C23.2 OR IEC320 C22.3)</td><td>A sample is placed in the test apparatus(as below) so that the axis of the flexible cable is vertical where it enters the sample.The flexible cable is then subjected to show in the table:
<table><tr><th>Rating</th><th>Pull</th></tr><tr><td>I<=2.5A</td><td>50</td></tr><tr><td>2.5A<I<16A U<250V</td><td>60</td></tr><tr><td>I<16A U>250V</td><td>80</td></tr><tr><td>I>16A</td><td>100</td></tr></table>
Immediately afterwards, the flexible cable is subjected for
<table><tr><th rowspan="2">Rating of plug or portable socket-outlet</th><th colspan="5">Flexible cable (number of cores x cross-section in mm²)</th></tr><tr><th>2 x 0,5</th><th>2 x 0,75</th><th>3 x 0,5</th><th>3 x 0,75</th><th>(2 or more) x 1</th></tr><tr><td>Up to and including 16 A and 250 V</td><td>0,1 Nm</td><td>0,15 Nm</td><td>0,15 Nm</td><td>0,25 Nm</td><td>0,25 Nm</td></tr><tr><td>16A and above 250 V</td><td>-</td><td>-</td><td>-</td><td>-</td><td>0,35 Nm</td></tr><tr><td>Above 16 A</td><td>-</td><td>-</td><td>-</td><td>-</td><td>0,425 Nm</td></tr></table>
 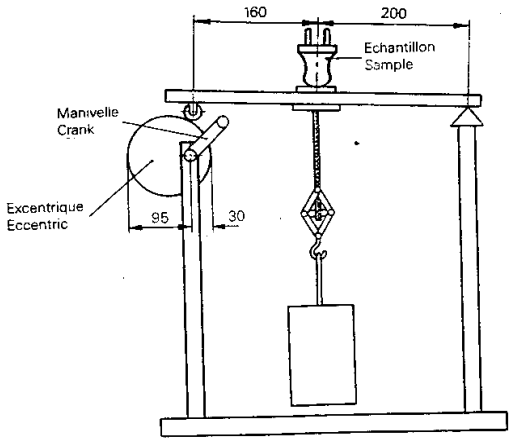
</td><td>After the test,the flexible shall not have been displaced by more than 2mm,or no break.</td></tr>
</table>
Confidential Proprietary

No.	Items項目	Conditions for Test測試條件	Specification判定規格
10	Breaking Capacity 分斷容量 (IEC320 C19)	The connector and appliance inlet are connected and disconnected 50 times (100 strokes) at a rate of 30 strokes per minute.the length of a stroke of the test apparatus is between 50mm and 60mm, The periods during which the test current is passed from the connection to the subsequent disconnection of the accessories are 1.5(+0.5,-0)s,The test voltage is 275V,the test current is 1.25 times rated current and the power factor is at least 0.95 for 10A and 16A connectors and 0.6±0.05 for other connectors. 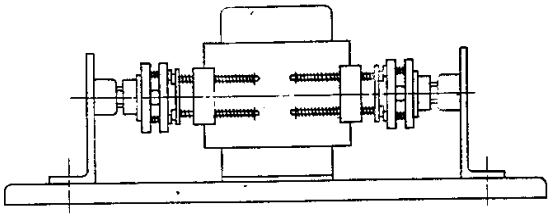 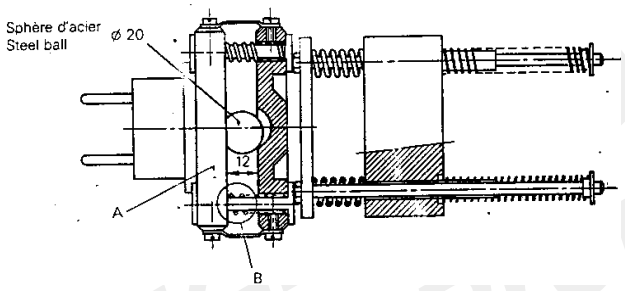	The specimen shall show no damage impairing its further use and the entry holes for the pin shall not show any serious damage
11	Tumbling Barrel Test 滾桶測試 (IEC884 C24.2)	A sample is tested by 10 falls per minute in a tumbling barrel as shown below. The flexible cable shall be cut for a free length of about 100mm from the accessory. The number of falls shown in the table; Weight / Numbers <100g / 1000 >100g / 500 >200g / 100 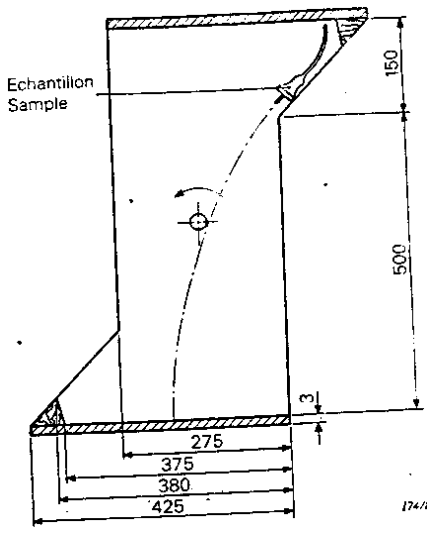	After the test,no part detached or loosened,the pin shall not turn when a torque of 0.4Nm is applied,first in one direction for 1 min and then in the opposite direction for 1 min.

Confidential Proprietary

No.	Items項目	Conditions for Test測試條件	Specification判定規格
12	Low Temperature Impact 低溫撞擊測試 (IEC884 C24.4)	The specimen is subjected to an impact test by mean of an apparatus shown in below.At a temperature of -15±2℃ for at least 16h.The falling weight of 1000±2g is allowed to fall from a height of 100 mm. 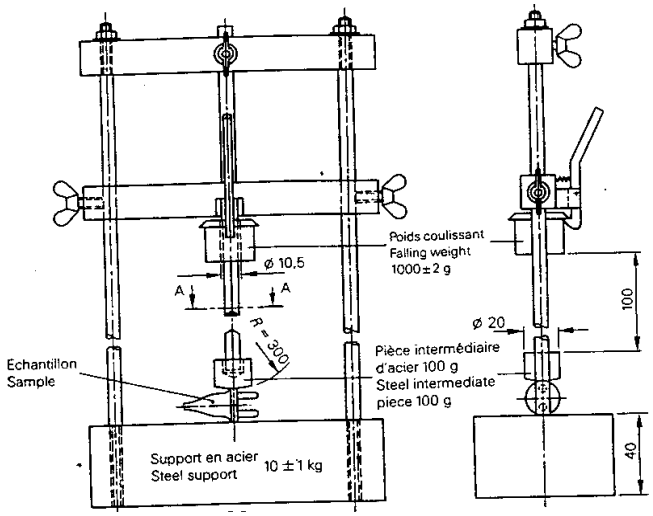 	No damage within the meaning of the standard
13	Resistance to Aging 老化試驗 (IEC884 C16.1)	The temperature in the cabinet is 70±2℃.The specimen is kept in the cabinet for 7 days (168h). After the treatment, the specimen is kept at a room temperature and relative humidity between 45%-55% for least 4 days (96h).after,the specimen shall show no crack visible with normal or corrected vision. A forefinger wrapped in a dry piece of rough cloth is pressed on the specimen with a force of 5N. No traces of the cloth shall remain on the specimen and the	After the test,the specimen shll show no damage which would lead to non-compliance with the standard
14	Compression Test 壓迫試驗 (IEC884 C24.5)	A specimen is pressed between two flat surfaces with a force of 150N for 5 min,as shown in fig. After 15 min,remove from the test apparatus and check it.A specimen is subjected to a compression test in the nanner as shown in below,the temperature of the pressure plate :23±2℃. Applied force :300N The specimen is placed in each position as shown in fig. for 1 min and shall be checked,15 min after the removal from the test apparatus. 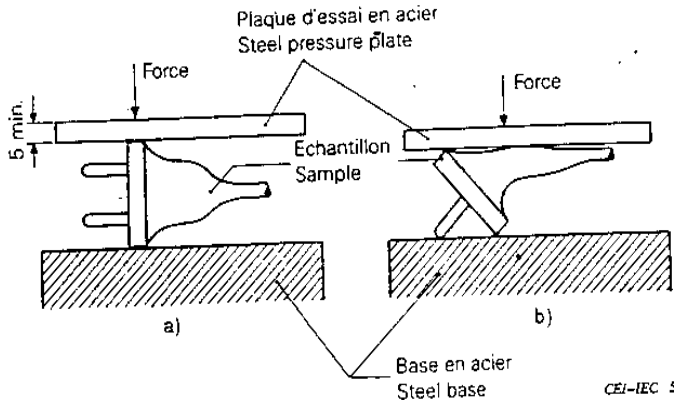 	No damage within the meaning of the standard

Confidential Proprietary

VDE Prüf- und Zertifizierungsinstitut

ZEICHENGENEHMIGUNG
MARKS APPROVAL

King Cord Co., Ltd.
8F-3 No. 124 Sianjheng 3rd. Rd.
302 JHUBEI CITY, HSINCHU COUNTRY
TAIWAN

ist berechtigt, für ihr Produkt /
is authorized to use for their product

Geräteanschlußleitung
Cord set

die hier abgebildeten markenrechtlich geschützten Zeichen
für die ab Blatt 2 aufgeführten Typen zu benutzen /
the legally protected Marks as shown below for the types referred to on page 2 ff.



Geprüft und zertifiziert nach /
Tested and certified according to

DIN EN 60799 (VDE 0626):1999-06; EN 60799:1998

Aktenzeichen: 1384300-1570-0008 / 243879
File ref.:

VDE Prüf- und Zertifizierungsinstitut GmbH
VDE Testing and Certification Institute
Zertifizierungsstelle / *Certification*

Ausweis-Nr. 40017246 Blatt 1
Certificate No. *Page*

Weitere Bedingungen siehe Rückseite und Folgeblätter /
further conditions see overleaf and following pages

Offenbach, 2006-03-27
(letzte Änderung / updated 2017-11-28)

R. Nickel

VDE Zertifikate sind nur gültig bei Veröffentlichung unter:
VDE certificates are valid only when published on:

http://www.vde.com/zertifikat
http://www.vde.com/certificate

VDE

VDE Prüf- und Zertifizierungsinstitut
Zeichengenehmigung

Name und Sitz des Genehmigungs-Inhabers / *Name and registered seat of the Certificate holder*
King Cord Co., Ltd., 8F-3 No. 124 Sianjheng 3rd. Rd., 302 JHUBEI CITY, HSINCHU COUNTRY, TAIWAN

Aktenzeichen / *File ref.*	letzte Änderung / *updated*	Datum / *Date*
1384300-1570-0008 / 243879 / TL3 / E	2017-11-28	2006-03-27

Dieses Blatt gilt nur in Verbindung mit Blatt 1 des Zeichengenehmigungsausweises Nr. 40017246.
This supplement is only valid in conjunction with page 1 of the Certificate No. 40017246.

Geräteanschlußleitung
Cord set

Typ(en) / *Type(s)*

1 KC-015/ KC-003
2 KC-015/ KC-003R
3 KC-015A/ KC-003
4 KC-015A/ KC-003R

Bemessungsspannung *Rated voltage*	AC 250 V
Bemessungsstrom *Rated current*	10 A
Polzahl *Number of poles*	2-polig mit Schutzkontakt *2-pole with earthing contact*
Bauart *Kind of construction*	Stecker Typ KC-015 und KC-015A: Normblatt DIN 49441-R2 Gerätesteckdose Typ KC-003 und KC-003R: Normblatt C13 *Plug type KC-015 and KC-015A:* *standard sheet DIN 49441-R2* *Connector type KC-003 and KC-003R: standard sheet C13*
Anmerkung(en) *Remark(s)*	Stecker Typ KC-015 und KC-015A genehmigt unter Az: 1384300-1560-0008 Gerätesteckdose Typ KC-003 und KC-003R genehmigt unter Az: 1384300-1550-0012 *Plug type KC-015 and KC-015A approved under* *VDE-ref.: 1384300-1560-0008* *Connector type KC-003 and KC-003R approved under* *VDE-ref.: 1384300-1550-0012*
Produktinformation *Product information*	siehe Anlage Nr. 700 und 900 vom 2017-11-28 *see Appendix No. 700 and 900 dated 2017-11-28*

KING-CORD Confidential Proprietary

Dieser Zeichengenehmigungs-Ausweis bildet eine Grundlage für die EG-Konformitätserklärung und CE-Kennzeichnung durch den Hersteller oder dessen Bevollmächtigten und bescheinigt die Konformität mit den grundlegenden Schutzanforderungen der **EG-Niederspannungsrichtlinie 2014/35/EU.**
This Marks Approval is a basis for the EC Declaration of Conformity and the CE Marking by the manufacturer or his agent and proves the conformity with the essential safety requirements of the ***EC Low-Voltage Directive 2014/35/EU.***

Fortsetzung siehe Blatt 3 /
continued on page 3

VDE Prüf- und Zertifizierungsinstitut
Zeichengenehmigung

Name und Sitz des Genehmigungs-Inhabers / *Name and registered seat of the Certificate holder*
King Cord Co., Ltd., 8F-3 No. 124 Sianjheng 3rd. Rd., 302 JHUBEI CITY, HSINCHU COUNTRY, TAIWAN

Aktenzeichen / *File ref.*	letzte Änderung / *updated*	Datum / *Date*
1384300-1570-0008 / 243879 / TL3 / E	2017-11-28	2006-03-27

Dieses Blatt gilt nur in Verbindung mit Blatt 1 des Zeichengenehmigungsausweises Nr. 40017246.
This supplement is only valid in conjunction with page 1 of the Certificate No. 40017246.

VDE Prüf- und Zertifizierungsinstitut GmbH
VDE Testing and Certification Institute
Fachgebiet TL3
Section TL3

KING-CORD
Confidential Proprietary

VDE Prüf- und Zertifizierungsinstitut
Zeichengenehmigung

Ausweis-Nr. / *Certificate No.* 40017246

Beiblatt / *Supplement*

Name und Sitz des Genehmigungs-Inhabers / *Name and registered seat of the Certificate holder*
King Cord Co., Ltd., 8F-3 No. 124 Sianjheng 3rd. Rd., 302 JHUBEI CITY, HSINCHU COUNTRY, TAIWAN

Aktenzeichen / *File ref.*
1384300-1570-0008 / 243879 / TL3 / E

letzte Änderung / *updated*
2017-11-28

Datum / *Date*
2006-03-27

Dieses Beiblatt ist Bestandteil des Zeichengenehmigungsausweises Nr. 40017246.
This supplement is part of the Certificate No. 40017246.

Geräteanschlußleitung
Cord set

Fertigungsstätte(n)
Place(s) of manufacture

Referenz/*Reference*	
30013100	King-Cord Electronics (Shenzhen) Co., Ltd. No. B2 The West Industry Park of TanTou, Song Gang Town 518105 BAO-AN DISTRICT, SHENZHEN CITY Guangdong CHINA

VDE Prüf- und Zertifizierungsinstitut GmbH
VDE Testing and Certification Institute
Fachgebiet TL3
Section TL3

KING-CORD
Confidential Proprietary

VDE Prüf- und Zertifizierungsinstitut
Zeichengenehmigung

Ausweis-Nr. / *Certificate No.* 40017246

Infoblatt / *Info sheet*

Name und Sitz des Genehmigungs-Inhabers / *Name and registered seat of the Certificate holder*
King Cord Co., Ltd., 8F-3 No. 124 Sianjheng 3rd. Rd., 302 JHUBEI CITY, HSINCHU COUNTRY, TAIWAN

Aktenzeichen / *File ref.*	letzte Änderung / *updated*	Datum / *Date*
1384300-1570-0008 / 243879 / TL3 / E	2017-11-28	2006-03-27

Dieses Blatt gilt nur in Verbindung mit Blatt 1 des Zeichengenehmigungsausweises Nr. 40017246.
This supplement is only valid in conjunction with page 1 of the Certificate No. 40017246.

Genehmigung zum Benutzen des auf Seite 1 abgebildeten markenrechtlich geschützten Zeichens des VDE:

Grundlage für die Benutzung sind die Allgemeinen Geschäftsbedingungen (AGB) der VDE Prüf- und Zertifizierungsinstitut GmbH (www.vde.com\AGB-Institut). Das Recht zur Benutzung erstreckt sich nur auf die bezeichnete Firma mit den genannten Fertigungsstätten und die oben aufgeführten Produkte mit den zugeordneten Bezeichnungen. Die Fertigungsstätte muss so eingerichtet sein, dass eine gleichmäßige Herstellung der geprüften und zertifizierten Ausführung gewährleistet ist.
Die Genehmigung ist so lange gültig wie die VDE-Bestimmungen gelten, die der Zertifizierung zugrunde gelegen haben, sofern sie nicht auf Grund anderer Bedingungen aus der VDE Prüf- und Zertifizierungsordnung (PM102) zurückgezogen werden muss.
Der Gültigkeitszeitraum einer VDE-GS-Zeichengenehmigung kann auf Antrag verlängert werden. Bei gesetzlichen und / oder normativen Änderungen kann die VDE-GS-Zeichengenehmigung ihre Gültigkeit zu einem früheren als dem angegebenen Datum verlieren.
Produkte, die das Biozid Dimethylfumarat (DMF) enthalten, dürfen gemäß der Kommissionsentscheidung 2009/251/EG nicht mehr in den Verkehr gebracht oder auf dem Markt bereitgestellt werden.
Der VDE-Zeichengenehmigungsausweis wird ausschließlich auf der ersten Seite unterzeichnet.

Approval to use the legally protected Mark of the VDE as shown on the first page:
Basis for the use are the general terms and conditions of the VDE Testing and Certification Institute (www.vde.com\terms-institute). The right to use the mark is granted only to the mentioned company with the named places of manufacture and the listed products with the related type references. The place of manufacture shall be equipped in a way that a constant manufacturing of the certified construction is assured.
The approval is valid as long as the VDE specifications are in force, on which the certification is based on, unless it is withdrawn according to the VDE Testing and Certification Procedure (PM102E).
The validity period of a VDE-GS-Mark Approval may be prolonged on request. In case of changes in legal and / or normative requirements, the validity period of a VDE-GS-Mark Approval may be shortened.
Products containing the biocide dimethylfumarate (DMF) may not be marketed or made available on the EC market according to the Commission Decision 2009/251/EC.
The approval is solely signed on the first page.

KING CORD Industrial Proprietary

Accréditation
N°5-0014
Portée
disponible sur
www.cofrac.fr

LICENCE

APPAREILLAGE ELECTRIQUE DOMESTIQUE

LCIE N°: 657152

Délivrée à : *Delivered to:*	**KING CORD Co Ltd** N°52-5 Siasihhu Shanghu Village, Yangmei Township, - Taoyuan County 326 - TAÏWAN
Site de fabrication : *Factory:*	**KING CORD CO., LTD (SHENZHEN)** **(1562AP)** N0 B2 The West Industry Park of Tan Tou, Song Gang Town, Bao'an District - 518105 Shen Zhen City, Guangdong - CHINE
Produit : *Product:*	Fiche de prise de courant *Plug*
Marque commerciale (s'il y a lieu) : *Trade mark (if any):*	**KING CORD**
Modèle, type, référence : *Model, type, reference:*	KC-015 , KC-015A
Caractéristiques nominales et principales : *Rating and principal characteristics:*	16 A , 250 V~ , 2P+T / *2P+E*
Informations complémentaires : *Additional information:*	Voir annexe / *see annex* Mise à jour des certificats de câble et de la liste des composants / *update the certificates for cable and list of components*
Le produit est conforme à : *The product is in conformity with:*	NF C 61-314:2008 +A1:2010
Documents pris en compte : *Relevant documents:*	Certificat d'essai OC / CB test certificate n° NO1 6453 / TR n° 200230290 - Rapport d'essais / Test Report LCIE n° KGC05JU354ACSP, KGC-12NO0184ACSP, rapport d'essai / test report LCIE n°KGC-14MA0767ACSP
Annule et remplace (s'il y a lieu) : *Cancels and replaces (if necessary):*	Licence n°635900 du 2012-12-27

En vertu de la présente décision notifiée par le LCIE France organisme mandaté, AFNOR Certification accorde le droit d'usage de la Marque NF à la société qui en est titulaire pour les produits visés ci-dessus, dans les conditions définies par les règles générales de la Marque NF et par les règles de certification NF, pour autant que les contrôles réguliers de la fabrication et les vérifications par tierce partie soient satisfaisants.

On the strength of the present decision notified by LCIE France mandated certification body, AFNOR Certification grants the right to use the NF Mark to the licence holder for the above mentioned products, within the frame of the general rules of the NF Mark and of the NF certification rules, as far as the regular checking and third party verifications of the production are satisfactory.

Fontenay-aux-Roses, 2014-05-20

Date de fin de validité -
Limit expired date:

La validité de la présente licence cesse dès l'annulation de l'une des normes sur lesquelles elle est fondée.
The present license is valid until the cancellation of one of the standards on which it is based.

Didier BOURGES
Responsable de Certification
Certification Officer

LABORATOIRE CENTRAL DES INDUSTRIES ELECTRIQUES
S.A.S
au capital de 15.745.984€
RCS Nanterre B 408 363 174
33, Av. du Cal Leclerc
FONTENAY-aux-ROSES
F-92260

ANNEXE/*ANNEX*
LCIE N°657152

RÉFÉRENCES, CARACTÉRISTIQUES PRINCIPALES
REFERENCES, PRINCIPAL CHARACTERISTICS

KC-015 : entrée latérale de câble / *lateral enter of cable*
KC-015A : entrée longitudinale de câble / *longitudinal enter of cable*

CLASSIFICATION

Feuille de norme / *Standard Sheet*	V
Courant nominal / *Rated current* (A) Tension nominale / *Rated voltage* (V)	16 A 250 V~
Degré de protection *Degree of protection*	IP20
Présence de contact de terre *Provision for earthing*	avec double contact de terre *with dual earthing contact*
Procédé de raccordement du câble *Method of connecting the cable*	non démontable *non-rewirable*
Type de connexion Type of connections	sertie *crimped*
Classe du matériel *Class of equipment*	I
Broche *Pin*	massive *solid*
Couleur *Colour*	noir *black*

Composants *Components*	Modèle *Model*	Fabricant *Manufacturer*	Conformité *Conformity*	Validité *Validity*
Câble / *Cable*	H05VV-F 3G0,75 / 1,0 / 1,5 mm²	I Sheng Electric Wire & Cable Co., Ltd. Shenzhen Tongyuan Industrial Co., Ltd. Shenzhen Baohing Electric Wire & Cable Manufacture Co., Ltd.	VDE	-

LABORATOIRE CENTRAL DES INDUSTRIES ELECTRIQUES
S.A.S
au capital de 15.745.984€
RCS Nanterre B 408 363 174
33, Av. du Gal Leclerc
FONTENAY-aux-ROSES
F-92260

Accréditation
N°5-0014
Portée
disponible sur
www.cofrac.fr

LICENCE

APPAREILLAGE ELECTRIQUE DOMESTIQUE

LCIE N° : 655790

Délivrée à : *Delivered to:*	**KING CORD Co Ltd** N°52-5 Siasihhu Shanghu Village, Yangmei Township, - Taoyuan County 326 - TAÏWAN
Site de fabrication : *Factory:*	**KING CORD CO., LTD (SHENZHEN)** **(1562AP)** N0 B2 The West Industry Park of Tan Tou, Song Gang Town, Bao'an District - 518105 Shen Zhen City, Guangdong - CHINE
Produit : *Product:*	Connecteurs pour usages domestiques et usages généraux analogues *Appliance couplers for household and similar general purposes*
Marque commerciale (s'il y a lieu) : *Trade mark (if any):*	**KING CORD**
Modèle, type, référence : *Model, type, reference:*	KC-003 , KC-003R
Caractéristiques nominales et principales : *Rating and principal characteristics:*	10 A , 250 V~ , 2P+T / *2P+E*
Informations complémentaires : *Additional information:*	Voir annexe / *see annex* Mise à jour des certificats de câble / *update the certificates for cable*
Le produit est conforme à : *The product is in conformity with:*	EN 60320-1:2001 +A1:2007
Documents pris en compte : *Relevant documents:*	Certificat d'essai OC / CB test certificate n°SE-6 1347/TR n° SH09110914-001, rapports d'essai / test reports n° KGC-10SE0795ACSP, KGC-14MA0768ACSP
Annule et remplace (s'il y a lieu) : *Cancels and replaces (if necessary):*	Licence n°606990 du 2011-03-10

En vertu de la présente décision notifiée par le LCIE France organisme mandaté, AFNOR Certification accorde le droit d'usage de la Marque NF à la société qui en est titulaire pour les produits visés ci-dessus, dans les conditions définies par les règles générales de la Marque NF et par les règles de certification NF, pour autant que les contrôles réguliers de la fabrication et les vérifications par tierce partie soient satisfaisants.

On the strength of the present decision notified by LCIE France mandated certification body, AFNOR Certification grants the right to use the NF Mark to the licence holder for the above mentioned products, within the frame of the general rules of the NF Mark and of the NF certification rules, as far as the regular checking and third party verifications of the production are satisfactory.

Fontenay-aux-Roses, 2014-04-16

Date de fin de validité -
Limit expired date:

Rémi HANOT
Responsable de Certification
Certification Officer

LABORATOIRE CENTRAL DES INDUSTRIES ELECTRIQUES
S.A.S
au capital de 15.745.984€
RCS Nanterre B 408 363 174
33, Av. du Gal Leclerc
FONTENAY-aux-ROSES
F-92260

La validité de la présente licence cesse dès l'annulation de l'une des normes sur lesquelles elle est fondée.
The present licen se is valid until the cancellation of one of the standards on which it is based.

ANNEXE / *ANNEX*
LCIE N°655790

CARACTÉRISTIQUES PRINCIPALES
PRINCIPAL CHARACTERISTICS

Classification

Feuille de norme *Standard Sheet*	C13
Courant nominal *Rated current*	10 A
Tension nominale *Rated voltage*	250 V~
Degré de protection *Degree of protection*	IP20
Température maximale de la base des broches du socle de connecteur correspondant *Maximum pin temperature at the base of the pins of the corresponding appliance inlet*	prises mobiles pour conditions froides (70℃) *connectors for cold conditions (70℃)*
Type d'équipement à raccorder *Type of equipment to be connected*	prises mobiles pour matériels de la classe I *connectors for class I equipment*
Mode de raccordement du câble *Method of connecting the cord*	prises mobiles non démontables *non-rewirable connectors*
Entrée de câble *Cable entry*	longitudinale / *longitudinal* KC-003 latérale / *lateral* KC-003(R)
Couleur *Colour*	toutes couleurs *any colours*

Composant ***Component***	**Modèle** ***Model***	**Fabricant** ***Manufacturer***	**Conformité** ***Conformity***	**Validité** ***Validity***
Câble / *Cable*	H05VV-F 3G0,75 /1,0 /1,5mm²	I-Sheng Electric Wire & Cable Co., Ltd.	VDE	/
		Shenzhen Tongyuan Industrial Co., Ltd.		
		Shenzhen Baohing Electric Wire & Cable Manufacture Co., Ltd.		

LABORATOIRE CENTRAL DES INDUSTRIES ELECTRIQUES
S.A.S
au capital de 15.745.984€
RCS Nanterre B 408 363 174
33, Av. du Gal Leclerc
FONTENAY-aux-ROSES
F-92260

CERTIFICATE

Issued to:
Applicant:
King Cord Co., Ltd.
8F-3 No. 124 Sianjheng 3rd. Rd.,
302 Jhubei City, Hsinchu County, Taiwan

Licensee:
King Cord Co., Ltd.
8F-3 No. 124 Sianjheng 3rd. Rd.,
302 Jhubei City, Hsinchu County, Taiwan

Product	:	plug, 2 pole
Trade name(s)	:	KING CORD
Type(s)/model(s)	:	KC-015 and KC-015A

The product and any acceptable variation thereto is specified in the Annex to this certificate and the documents therein referred to.

DEKRA hereby declares that the above-mentioned product has been certified on the basis of:
- a type test according to the standard IEC 60884-1:2002, IEC 60884-1:2002/A1:2006, IEC 60884-1:2002/A2:2013, NEN 1020:2019, NEN-IEC 60884-1:2019, NEN-IEC 60884-1:2019/A1:2019 and NEN-IEC 60884-1:2019/A2:2019
- an inspection of the production location according to CENELEC Operational Document CIG 021
- a certification agreement with the number 916475

DEKRA hereby grants the right to use the KEMA-KEUR certification mark.

The KEMA-KEUR certification mark may be applied to the product as specified in this certificate for the duration of the KEMA-KEUR certification agreement and under the conditions of the KEMA-KEUR certification agreement.

This certificate is issued on 24 January 2021 and expires upon withdrawal of one of the above mentioned standards.

Certificate number: 2010774.01 REV.1

DEKRA Certification B.V.

B.T.M. Holtus
Managing Director

K. Lin
Certification Manager

© Integral publication of this certificate is allowed

ACCREDITED BY THE DUTCH ACCREDITATION COUNCIL

PRODUCTS RvA C 001

KEMA KEUR

SPECIFICATION OF THE CERTIFIED PRODUCT

Product data

Product	:	plug, 2 pole
Trade name(s)	:	KING CORD
Type(s)/model(s)	:	KC-015 and KC-015A
Rated current	:	16 A
Rated voltage	:	250 V~
Earthing	:	with earthing contact
Design	:	non-rewirable
Standard sheet	:	standard sheet VII of NEN 1020: 2019
Applied flexible cords	:	H03VV-F 3G 0,75 mm² H05VV-F 3G 0,75/1,0(Max. 2 m)/1,5 mm² H05RR-F 3G0,75/1,0(Max. 2 m) mm² H05RN-F 3G0,75/1,0(Max. 2 m) mm² H07RN-F 3G2,5 mm²
Certification mark	:	complies with the specified requirements
Cord termination	:	crimped connection
Description	:	body of thermoplastic material for class I appliances

Product data – type KC-015

Description	:	angle type

Product data – type KC-015A

Description	:	straight type

TESTS

Test requirements

IEC 60884-1:2002
IEC 60884-1:2002/A1:2006
IEC 60884-1:2002/A2:2013
NEN 1020:2019
NEN-IEC 60884-1:2019
NEN-IEC 60884-1:2019/A1:2019
NEN-IEC 60884-1:2019/A2:2019

Test result

The test results are laid down in DEKRA test file 437120000.

Additional information

This certificate replaces certificate No. 2010774.01 which we hereby declare invalid.

The list of components is laid down in test report 4371200.50.

Conclusion

The examination proved that all requirements were met.

Factory location

King-Cord Electronics (Shenzhen) Co., Ltd.
No. B2, The West Industry Park of Tan Tou, Song Gang Town, BAO-AN DISTRICT
518105 Shenzhen City, Guangdong, China

KING-CORD Confidential Proprietary

CERTIFICATE

Issued to:
Applicant:
King-Cord Co., Ltd.
8F-3 No. 124 Sianjheng 3rd. Rd.,
302 Jhubei City, Hsinchu County, Taiwan

Licensee:
King-Cord Co., Ltd.
8F-3 No. 124 Sianjheng 3rd. Rd.,
302 Jhubei City, Hsinchu County, Taiwan

Product	:	Connector, 2-pole, with earthing
Trade name(s)	:	KING-CORD
Type(s)/model(s)	:	KC-003

The product and any acceptable variation thereto as specified in the Annex to this certificate and the documents therein referred to.

DEKRA hereby declares that the above-mentioned product has been certified on the basis of:
- a type test according to EN IEC 60320-1:2021
- an inspection of the factory location according to CENELEC Operational Document CIG 021
- a DEKRA certification agreement with the number 916475

DEKRA hereby grants the right to use the KEMA-KEUR certification mark.

The KEMA-KEUR certification mark may be applied to the product as specified in this certificate for the duration and under the conditions of the KEMA-KEUR certification agreement.

This certificate is issued on 18 July 2023 and expires upon withdrawal of one of the above mentioned standards.

Certificate number: 35-129728

DEKRA Certification B.V.

B.T.M. Holtus
Managing Director

K. Lin
Certification Manager

© Integral publication of this certificate is allowed

ACCREDITED BY THE
DUTCH ACCREDITATION
COUNCIL

PRODUCTS
RvA C 001

KEMA KEUR

SPECIFICATION OF THE CERTIFIED PRODUCT

Product data

Product	:	Connector, 2-pole, with earthing
Trade name(s)	:	KING-CORD
Type(s)/model(s)	:	KC-003
Rated current	:	10 A
Rated voltage	:	250 V~
Overvoltage category	:	II
Pollution degree	:	2
Rated impulse voltage	:	2500V
Material group	:	III
Standard sheet	:	C13
Temperature limit	:	T70
Applied flexible cords	:	H05VV-F 3G0,75/1,0/1,5 mm²
Certification mark	:	complies with the requirements
Cord termination	:	crimped connection
Description	:	straight type, body of thermoplastic material as part of a cord set or an interconnection cord set for class I appliances

TESTS

Test requirements
EN IEC 60320-1:2021

Test result
The test results are laid down in DEKRA test file 490444600.

Additional information
The list of components is laid down in test report 4904446.50.

Conclusion
The examination proved that all requirements were met.

Factory location
King-Cord Electronics (Shenzhen) Co., Ltd.
No. B2, The West Industry Park of Tan Tou, Song Gang Town, Bao An District,
518105 Shenzhen City Guangdong, China

KING-CORD Confidential Proprietary

LICENCE

No. 12175 - Issue No 2

Issued to:
Applicant:
King-Cord Co., Ltd.
No. 52-5 Siasihhu Shanghu Village
Yangmei Township
326 TAOYUAN COUNTY
Taiwan

Licensee:
King-Cord Co., Ltd.
No. 52-5 Siasihhu Shanghu Village
Yangmei Township
326 TAOYUAN COUNTY
Taiwan

Product	:	appliance interconnection cord sets (2-pole)
Trade name(s)	:	KING-CORD
Type(s)/model(s)	:	KC-015/KC-003, KC-015/KC-003R, KC-015A/KC-003, KC-015A/KC-003R

The product and any acceptable variation thereto is specified in the annex to this licence and the documents therein referred to.

SGS CEBEC hereby declares that the above-mentioned product has been certified on the basis of:
- a type test according to the standard specified in annex
- an inspection of the production location according to CCA Group Operational Document CIG 021
- a certification agreement with the number 907

SGS CEBEC hereby grants the right to use the CEBEC certification mark

The CEBEC certification mark may be applied to the product as specified in this licence for the duration of the CEBEC certification agreement and under the conditions of the CEBEC certification agreement.

This licence is issued on: 14/01/2005

ir. R. Maquestiau,
Certification Manager

© Only integral publication of this certificate, including the annex, is allowed

SGS Belgium N.V. - CEBEC
Avenue F. Van Kalkenlaan, 9A/b.1
B-1070 Bruxelles/Brussel
T: +32 [0]2 556 00 20
F: +32 [0]2 556 00 36

Accredited by BELCERT 055 PR

SPECIFICATION OF THE CERTIFIED PRODUCT

Product data

Product	:	appliance interconnection cord sets (2-pole)
Trade name(s)	:	KING-CORD
Type(s)/Model(s)	:	KC-015/KC-003, KC-015/KC-003R, KC-015A/KC-003, KC-015A/KC-003R
description	:	non-rewirable cord sets consisting of :
plug - type/model	:	KC-015, KC-015A
plug - rated current	:	16 A
plug - rated voltage	:	250 V~
plug - design	:	non-rewirable
plug - earthing	:	with dual earthing system
plug - standard sheet	:	VII
plug - certification mark(s)	:	CEBEC certified
connector - type/model	:	KC-003; KC-003R
connector - rated current	:	10 A
connector - rated voltage	:	250 V~
connector - design	:	non-rewirable
connector - earthing	:	with earthing contact
connector - standard sheet	:	C13
connector - certification mark(s)	:	CEBEC certified
applied flexible cord(s)	:	H05 VV-F
range covered	:	3G0.75-1-1.5 mm²

TESTS

Test requirements

NBN EN 60799 based on EN 60799:1998

Test results

The test results are laid down in certification file ref. 574541/01

Remarks

This certificate is based on certificate ref. CB NO 10432 and test report(s) ref. 200032167

Conclusion

The examination proved that all test requirements were met.

Checked by, project leader : Jean-Pierre Brecht 2005-01-19

Department Manager, Product Certification : 2005-01-20

Certification Manager : 2005-01-20

FACTORY LOCATION(S)

King-Cord Co., Ltd
No. B2 The West Industry Park of Tan Tou
Song Gang Town, Bao'An District
ShenZhen City, GUANGDONG
China

OVE Austrian Electrotechnical Association
Eschenbachgasse 9 | 1010 Wien | Austria
ZVR: 327279890 | www.ove.at

OVE Certification
Kahlenberger Str. 2A | 1190 Wien | Austria
T +43 1 370 58 06 | certification@ove.at

Validity of ÖVE-Certificates can be checked at www.ove.at

ÖVE-CERTIFICATE

including the entitlement to use the Austrian Safety Mark

Certificate No.: **20833-002-11**

Valid from: 2023 05 16
until: 2025 05 16

The Austrian Electrotechnical Association (OVE) hereby grants the right to the company mentioned below to label the listed products with the Austrian Safety Mark.

Company: **King-Cord Co. Ltd.**
No. 52-5 Siasihhu Shanghu Village,
Yangmei Township
Taoyuan County 326
Taiwan

Product: **Cord Set for Class I appliances**

The products submitted by the applicant were type tested in accordance with the requirements of the technical standards and specifications listed in this certificate. OVE certifies the conformity of the listed products and those products manufactured strictly identical to the submitted ones (EN ISO/IEC 17067, Conformity Assessment Scheme Type 5).

The manufacturing process and the products are subject to ongoing surveillance based on harmonized European procedures. This certificate has been issued under the presumption and conditional on the fact that the applicant holds all necessary legal rights with regard to the product, presented for the testing and certification.

Results of testing are shown in file No(s).: **1327-904/01**

Österreichischer Verband für Elektrotechnik

Wien, 2023 04 18

OVE Certification

Accredited by the Federal Ministry for Digital and Economic Affairs as Certification Body for products within the scope as given in the official decree and published under https://akkreditierung-austria.gv.at.

KING-COORD Confidential Proprietary

Manufacturer:

King-Cord Co. Ltd.
No. 52-5 Siasihhu Shanghu Village,
Yangmei Township
Taoyuan County 326
Taiwan

Factory location(s):

King-Cord Electronics (Shenzhen) Co., Ltd.
No. B2, The West Industry Park of Tan Tou,
Song Gang Town, Bao'an District
518105 Shenzhen, Guangdong
China

Tested and certified according to:

OVE EN IEC 60799:2021-09-01

This certificate is the basis for the EU Declaration of Conformity and the CE Marking by the manufacturer or his agent and shows the conformity of the certified product(s) with the listed standards as defined by the **EU Low-Voltage Directive 2014/35/EU**. For the presumption of conformity according to Art. 12 with the safety objectives according to Art. 3 of the Directive, transitional periods given in the Official Journal of the European Union have to be observed.

KING-CORD Confidential Proprietary

Product: Cord Set for Class I appliances

Type designation: *Rating:*	***Trademark:***
KC-015/KC-003 Rated voltage: AC 250 V Rated current: 10 A H05VV-F 3 G 0,75	KING CORD
KC-015/KC-003 Rated voltage: AC 250 V Rated current: 10 A H05VV-F 3 G 1	KING CORD
KC-015/KC-003 Rated voltage: AC 250 V Rated current: 10 A H05VV-F 3 G 1,5	KING CORD

KC-015/KC-003R Rated voltage: AC 250 V Rated current: 10 A H05VV-F 3 G 0,75	KING CORD
KC-015/KC-003R Rated voltage: AC 250 V Rated current: 10 A H05VV-F 3 G 1	KING CORD
KC-015/KC-003R Rated voltage: AC 250 V Rated current: 10 A H05VV-F 3 G 1,5	KING CORD
KC-015A/KC-003 Rated voltage: AC 250 V Rated current: 10 A H05VV-F 3 G 0,75	KING CORD
KC-015A/KC-003 Rated voltage: AC 250 V Rated current: 10 A H05VV-F 3 G 1	KING CORD
KC-015A/KC-003 Rated voltage: AC 250 V Rated current: 10 A H05VV-F 3 G 1,5	KING CORD
KC-015A/KC-003R Rated voltage: AC 250 V Rated current: 10 A H05VV-F 3 G 0,75	KING CORD
KC-015A/KC-003R Rated voltage: AC 250 V Rated current: 10 A H05VV-F 3 G 1	KING CORD
KC-015A/KC-003R Rated voltage: AC 250 V Rated current: 10 A H05VV-F 3 G 1,5	KING CORD

KING-CORD
Confidential Proprietary

CERTIFICATE

FOR EUROPEAN PRODUCT SAFETY

Reference No. SE-S-2200309

Plug, non-rewirable

Type designation:	KC-015, KC-015A
Certificate holder:	King Cord Co., Ltd. 8F-3 No.124 Sianjheng 3rd. Rd., 302 Jhubei City, Hsinchu County, TAIWAN
The product complies with the standard(s):	IEC 60884-1: 2002+A1+A2 SS 4280834: 2013+T1 SFS 5610: 2015+A11 NEK 502: 2016 DS 60884-2-D1: 2017
Date of expiry:	10 March, 2027

Additional information in Appendix

Certification Body: Intertek Semko AB, Product Certification **Place:** Shanghai

Signed: **Date:** 10 March, 2022

Hyden Li

This Certificate is for the exclusive use of Intertek's client and is provided pursuant to the agreement between Intertek and its Client. Intertek's responsibility and liability are limited to the terms and conditions of the agreement. Intertek assumes no liability to any party, other than to the Client in accordance with the agreement, for any loss, expense or damage occasioned by the use of this Certificate. Only the Client is authorized to permit copying or distribution of this Certificate and then only in its entirety. Any use of the Intertek name or one of its marks for the sale or advertisement of the tested material, product or service must first be approved in writing by Intertek.

APPENDIX:

Reference No. SE-S-2200309

Technical Data:

Type designation	KC-015, KC-015A
Rated voltage (V)	250~
Rated current (A)	16
IP-class	20
Class	I
Type of cord	H03VV-F / H05VV-F / H03Z1Z1-F / H05Z1Z1-F / H05RR-F / H05BQ-F
Number of conductors	3
Conductor area	0,75 mm^2 / 0,75-2,5 mm^2 / 0,75 mm^2 / 0,75-1,5 mm^2 / 0,75-1,0 mm^2 / 0,75-1,0 mm^2
Standard Sheet:	CEE 7 / VII
Trademark	211201697SHA-001
Test Report	**KING-CORD**
Product information	Non-rewirable, with solid pins KC-015: with lateral cord entry KC-015A: with longitudinal cord entry

Manufacturing Sites: King-Cord Electronics (Shenzhen) Co., Ltd.
No B2, The West Industry Park of Tan Tou, Song Gang Town, Bao'an District,
Shenzhen City, Guangdong, 518105, China

The instruction for use shall be written in a language acceptable according to the national regulation in the country where the product is to be used.

If the product is to be marketed in different European countries, it must be provided with a certified plug appropriate for each country.

Certification Body: Intertek Semko AB, Product Certification **Place:** Shanghai

Signed: **Date:** 10 March, 2022

Hyden Li

This Certificate is for the exclusive use of Intertek's client and is provided pursuant to the agreement between Intertek and its Client. Intertek's responsibility and liability are limited to the terms and conditions of the agreement. Intertek assumes no liability to any party, other than to the Client in accordance with the agreement, for any loss, expense or damage occasioned by the use of this Certificate. Only the Client is authorized to permit copying or distribution of this Certificate and then only in its entirety. Any use of the Intertek name or one of its marks for the sale or advertisement of the tested material, product or service must first be approved in writing by Intertek.

CERTIFICATE

FOR EUROPEAN PRODUCT SAFETY

Reference No. SE-S-2200924

Connector for Class I equipment for cold condition

Type designation: KC-003, KC -003R

Certificate holder: King Cord Co Ltd.
8F-3 No.124 Sianjheng 3rd Rd. , 302 Jhubei City, Hsinchu County, Taiwan

The product complies with the standard(s): EN IEC 60320 -1:2021

Date of expiry: 26 July 2027

EU Directive information: According to the principle of presumption of conformity, this certificate constitutes support for an EU Declaration of Conformity to the Low Voltage Directive 2014/35/EU .

Additional Information in Appendix

Certification Body: Intertek Semko AB, Product Certification **Place:** Kista - Stockholm

Signed: **Date:** 26 July 2022

Hyden Li

This Certificate is for the exclusive use of Intertek's client and is provided pursuant to the agreement between Intertek and its Client. Intertek's responsibility and liability are limited to the terms and conditions of the agreement. Intertek assumes no liability to any party, other than to the Client in accordance with the agreement, for any loss, expense or damage occasioned by the use of this Certificate. Only the Client is authorized to permit copying or distribution of this Certificate and then only in its entirety. Any use of the Intertek name or one of its marks for the sale or advertisement of the tested material, product or service must first be approved in writing by Intertek.

APPENDIX:

Reference No. SE-S-2200924

Technical Data:

Type designation	KC-003, KC -003R
Rated voltage (V)	250~
Rated current (A)	10
Class	I
IP-Class	20
Type of cord	H05VV-F, H05Z1Z1-F, H05BQ -F
Number of conductors	3
Conductor area	0,75-1,5mm^2, 0,75 -1,5mm^2, 0,75 -1,0mm2 (Max length 2m for 0,75mm ^{2})
Standard sheet	C13 of EN 60320 -3
Trademark	**KING-CORD**
Test Report	220601058SHA-001
Product information	For class I equipment for cold conditions, non -rewirable KC-003 with longitudinal cord entry. KC-003R with lateral cord entry.

Manufacturing Sites: King-Cord Electronics (Shenzhen) Co. Ltd.
No B2, The West Industry Park of Tan Tou , Song Gang Town, Bao'an District ,
Shenzhen City, Guangdong , China

The certificate applies for countries that have sanctioned the use of plugs/outlets according to subject standard sheet and component standard.

This certificate replaces previously issued ref No. 1715055 dated 10 August 2017 .

According to the principle of presumption of conformity, this certificate, which includes production control, constitutes support for an EU Declaration of Conformity to the Low Voltage Direct ive 2014/35/EU. This presumption can expire before end of validity of this certificate due to new issued Standard or Amendment and changes within the EU legislation.

Certification Body: Intertek Semko AB, Product Certification **Place:** Kista - Stockholm

Signed: **Date:** 26 July 2022

Hyden Li

This Certificate is for the exclusive use of Intertek's client and is provided pursuant to the agreement between Intertek and its Client. Intertek's responsibility and liability are limited to the terms and conditions of the agreement. Intertek assumes no liability to any party, other than to the Client in accordance with the agreement, for any loss, expense or damage occasioned by the use of this Certificate. Only the Client is authorized to permit copying or distribution of this Certificate and then only in its entirety. Any use of the Intertek name or one of its marks for the sale or advertisement of the tested material, product or service must first be approved in writing by Intertek.

CERTIFICATE

No. P19223554

Order No. 374707

Product	Cord set
Applicant	King Cord Co., Ltd 8F-3 No.124 Sianjheng 3rd. Rd. 302 Jhubei City, Hsinchu Taiwan
Manufacturer	King Cord Co., Ltd 8F-3 No.124 Sianjheng 3rd. Rd. 302 Jhubei City, Hsinchu Taiwan
Factory	King-Cord Electronics (ShenZhen) Co., Ltd. No. B2, The West Industry Park of Tan Tou, Song Gang Town, Bao`an District, Shenzhen City, Guangdong, 518105 China
Ratings	10A 250V AC
Trade mark	KING-CORD
Model / Type Ref.	KC-015+KC-003
Principal characteristics	Cl. I, IP20. Non-rewirable with cord H05VV-F 3G0.75-1.0-1.5mm². (Max cord length 2m for 0.75mm²) Plug: Standard sheet VII. Connector: Standard Sheet C5 of EN 60320-3.
A sample of the product was tested and found to be in conformity with	INST EN 60799:1998
Validity	This certificate documents conformity with the standards shown, and also applies as license for use of Nemkos name and certification mark. The certificate and license is valid as long as the applicable conditions are complied with, and provided that any changes to the product are notified to Nemko for acceptance prior to implementation. New standards or amendments to the standards may imply that the product design must be updated and/or that re-testing and re-certification is necessary.
Additional information	
Additional model(s)	(7) See page 2

Date of issue 10-05-2019

Jiyea Gim

Jiyea Gim
Certification Department

Nemko AS
Gaustadalléen 30, P.O. Box 73 Blindern, 0314 Oslo, Norway
TEL +47 22 96 03 30 FAX +47 22 96 05 50 EMAIL info@nemko.com
ENTERPRISE NUMBER NO974404532

Additional model(s)

Product	Cord set
Pos. No	1
Model / Type Ref.	KC-015+KC-003
Trade mark (if different from page 1)	
Rating	10A 250V AC
Principal characteristics	Cl. I, IP20. Non-rewirable with cord H05Z1Z1-F 3G0.75-1.0-1.5mm². (Max cord length 2m for 0.75mm²) Plug: Standard sheet VII. Connector: Standard Sheet C5 of EN 60320-3.
Product	Cord set
Pos. No	2
Model / Type Ref.	KC-015+KC-003R
Trade mark (if different from page 1)	
Rating	10A 250V AC
Principal characteristics	Cl. I, IP20. Non-rewirable with cord H05VV-F 3G0.75-1.0-1.5mm². (Max cord length 2m for 0.75mm²) Plug: Standard sheet VII. Connector: Standard Sheet C5 of EN 60320-3.
Product	Cord set
Pos. No	3
Model / Type Ref.	KC-015+KC-003R
Trade mark (if different from page 1)	
Rating	10A 250V AC
Principal characteristics	Cl. I, IP20. Non-rewirable with cord H05Z1Z1-F 3G0.75-1.0-1.5mm². (Max cord length 2m for 0.75mm²) Plug: Standard sheet VII. Connector: Standard Sheet C5 of EN 60320-3.
Product	Cord set
Pos. No	4
Model / Type Ref.	KC-015A+KC-003
Trade mark (if different from page 1)	
Rating	10A 250V AC
Principal characteristics	Cl. I, IP20. Non-rewirable with cord H05VV-F 3G0.75-1.0-1.5mm². (Max cord length 2m for 0.75mm²) Plug: Standard sheet VII. Connector: Standard Sheet C5 of EN 60320-3.

KING-CORD Confidential Proprietary

Date of issue 10-05-2019

Jiyea Gim

Jiyea Gim
Certification Department

Nemko AS
Gaustadalléen 30, P.O. Box 73 Blindern, 0314 Oslo, Norway
TEL +47 22 96 03 30 FAX +47 22 96 05 50 EMAIL info@nemko.com
ENTERPRISE NUMBER NO974404532

DEMKO CERTIFICATE

Certificate No.	D-10514
Page	1/5
Date of Issue	2024-04-23
Certificate Holder	King-Cord Co., Ltd. 8F-3 No.124 Sianjheng 3rd. Rd., 302 Jhubei City, Hsinchu County, Taiwan
Production site	King-Cord Electronics (ShenZhen) Co., Ltd. No. B2, The West Industry Park of Tan Tou, Song Gang Town, Bao`an District Shenzhen City, Guangdong 518105, China
Certified Product	Cord sets
Model	KC-015+KC-003 See page 2–3 for additional models with details
Trademark	KING-CORD
Ratings	10A 250V~
Tested according to	EN IEC 60799:2021
Test Report No.	P24227550 issued on 2024-03-22
Additional	Non-rewirable cord-set for Class I equipment for cold condition. Standard Sheet VII /C13. With cable H05W-F 3G0.75-1.5mm^2 manufactured by Baohing or I-Sheng or King Cord (Max cord length 2m for 0.75mm^2). Thermoplastic, IP20.
Expire date	2026-08-30

Certification Manager
Thomas Wilson

This is to certify that representative sample(s) of the Product described herein ("Certified Product") have been investigated and found in compliance with the Standard(s) indicated on this Certificate, in accordance with the D-Mark Requirements. As specified in the respective appendix below the Designated Certificate holder is entitled to use the D-Mark, or its alternative for cables, for the Certified Product manufactured at the production site(s) identified above, in accordance with the D-Mark Service Agreement, including without limitation the D-Mark Testing and Certification Services Service Terms. Only those Products bearing the D-Mark should be considered as being covered by UL's D-Mark Service. This Certificate shall remain valid through the expiration date, unless terminated earlier in accordance with the Service Agreement including without limitation if the Standard identified on this Certificate is amended or withdrawn prior the expiration date.

Certification Body

UL International Demko A/S, Borupvang 5A, DK-2750 Ballerup, Denmark, Tel. +45 44 85 65 65,
info.dk@ul.com
www.UL.com

UL Solutions

Appendix DEMKO CERTIFICATE

Additional Information:

Product: Cord sets
Variant: 1
Model/Type Ref.: KC-015+KC-003
Ratings: 10A 250V~
Principle characteristics: Non-rewirable cord-set for Class I equipment for cold condition. Standard Sheet VII /C13. With cable H05Z1Z1-F 3G0.75-1.5mm^2 manufactured by Baohing (Max cord length 2m for 0.75 mm^2). Thermoplastic, IP20.

Product: Cord sets
Variant: 2
Model/Type Ref.: KC-015+KC-003R
Ratings: 10A 250V~
Principle characteristics: Non-rewirable cord-set for Class I equipment for cold condition. Standard Sheet VII /C13. With cable H05W-F 3G0.75-1.5mm^2 manufactured by Baohing or I-Sheng or King Cord (Max cord length 2m for 0.75mm^2). Thermoplastic, IP20.

Product: Cord sets
Variant: 3
Model/Type Ref.: KC-015+KC-003R
Ratings: 10A 250V~
Principle characteristics: Non-rewirable cord-set for Class I equipment for cold condition. Standard Sheet VII /C13. With cable H05Z1Z1-F 3G0.75-1.5mm^2 manufactured by Baohing (Max cord length 2m for 0.75 mm^2). Thermoplastic, IP20.

Product: Cord sets
Variant: 4
Model/Type Ref.: KC-015A+KC-003
Ratings: 10A 250V~
Principle characteristics: Non-rewirable cord-set for Class I equipment for cold condition. Standard Sheet VII /C13. With cable H05W-F 3G0.75-1.5mm^2 manufactured by Baohing or I-Sheng or King Cord (Max cord length 2m for 0.75mm^2). Thermoplastic, IP20.

Product: Cord sets
Variant: 5
Model/Type Ref.: KC-015A+KC-003
Ratings: 10A 250V~
Principle characteristics: Non-rewirable cord-set for Class I equipment for cold condition. Standard Sheet VII /C13. With cable H05Z1Z1-F 3G0.75-1.5mm^2 manufactured by Baohing (Max cord length 2m for 0.75 mm^2). Thermoplastic, IP20.

Appendix DEMKO CERTIFICATE

Product: Cord sets
Variant: 6
Model/Type Ref.: KC-015A+KC-003R
Ratings: 10A 250V~
Principle characteristics: Non-rewirable cord-set for Class I equipment for cold condition. Standard Sheet VII /C13. With cable H05W-F 3G0.75-1.5mm^2 manufactured by Baohing or I-Sheng or King Cord (Max cord length 2m for 0.75mm^2). Thermoplastic, IP20.

Product: Cord sets
Variant: 7
Model/Type Ref.: KC-015A+KC-003R
Ratings: 10A 250V~
Principle characteristics: Non-rewirable cord-set for Class I equipment for cold condition. Standard Sheet VII /C13. With cable H05Z1Z1-F 3G0.75-1.5mm^2 manufactured by Baohing (Max cord length 2m for 0.75 mm^2). Thermoplastic, IP20.

Appendix DEMKO CERTIFICATE

Certificate No. D-10514
Page 4/5
Date of Issue 2024-04-23

Certification Mark D-Mark

The D-Mark, as displayed below, shall appear on certified products only. Except as specified below the Mark shall be legible and no Minimum size is specified.

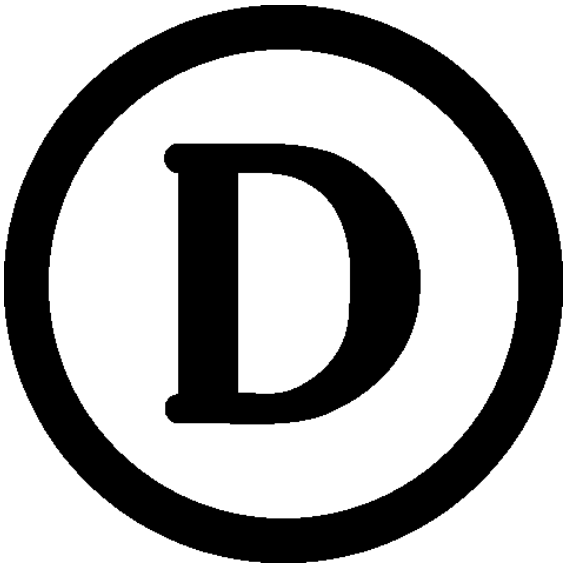

The size of the Mark may be reduced or enlarged on the condition that it remains readable and that the proportions of width and height are kept. The use of dark text for the D-Mark on light backgrounds and light text on dark backgrounds is permitted.

The D-Mark may appear on a label, nameplate, or may be cast, stamped or molded into the product. When appearing on a label or nameplate, the Manufacturer's name or trademark along with a model number are also required on that same label or nameplate. If cast, stamped or molded, the Certificate Manufacturer's name or trademark and model number shall also appear elsewhere on the product

When putting the product on the EU market, the manufacturer's name, trademark or mark of origin must be affixed in a clearly visible location and position on the product, on the package and in the user manual. It can be affixed by label, be directly imprinted, or cast or molded into the product.

Where the size of the product does not allow the Mark, the manufacturer's name, trademark, mark of origin and model number to be legible, and appearance on a label is not desired, it is allowed to cast, stamp or mold the Mark into the product, in a size which is not visible to the naked eye, provided the legible Mark, the manufacturer's name, trademark or mark of origin and model number appears on the package and in the user manual

Appendix DEMKO CERTIFICATE

Certificate No. D-10514
Page 5/5
Date of Issue 2024-04-23

Alternate certification Mark for cables

As an alternative to the D-Mark specified above the alternate D-Mark, displayed below, can appear on certified cables only. Minimum size is not specified, as long as the mark is legible.

◅DEMKO▻

The alternate D-Mark may be cast, stamped or molded into the cable and continue throughout the length of the cable as specified in the applicable cable standard.

All content shall be in accordance with the details provided on this D-Mark Certificate.

Certification Body

UL International Demko A/S, Borupvang 5A, DK-2750 Ballerup, Denmark, Tel. +45 44 85 65 65, info.dk@ul.com www.UL.com

UL Solutions

CERTIFICATE

No. P19223554

Order No. 374707

Product	Cord set
Pos. No	5
Model / Type Ref.	KC-015A+KC-003
Trade mark (if different from page 1)	
Rating	10A 250V AC
Principal characteristics	Cl. I, IP20. Non-rewirable with cord H05Z1Z1-F 3G0.75-1.0-1.5mm². (Max cord length 2m for 0.75mm²) Plug: Standard sheet VII. Connector: Standard Sheet C5 of EN 60320-3.
Product	Cord set
Pos. No	6
Model / Type Ref.	KC-015A+KC-003R
Trade mark (if different from page 1)	
Rating	10A 250V AC
Principal characteristics	Cl. I, IP20. Non-rewirable with cord H05VV-F 3G0.75-1.0-1.5mm². (Max cord length 2m for 0.75mm²) Plug: Standard sheet VII. Connector: Standard Sheet C5 of EN 60320-3.
Product	Cord set
Pos. No	7
Model / Type Ref.	KC-015A+KC-003R
Trade mark (if different from page 1)	
Rating	10A 250V AC
Principal characteristics	Cl. I, IP20. Non-rewirable with cord H05Z1Z1-F 3G0.75-1.0-1.5mm². (Max cord length 2m for 0.75mm²) Plug: Standard sheet VII. Connector: Standard Sheet C5 of EN 60320-3.

KINGCORD Confidential Proprietary

Date of issue 10-05-2019

Jiyea Gim

Jiyea Gim

Certification Department

Nemko AS
Gaustadalléen 30, P.O. Box 73 Blindern, 0314 Oslo, Norway
TEL +47 22 96 03 30 FAX +47 22 96 05 50 EMAIL info@nemko.com
ENTERPRISE NUMBER NO974404532

CERTIFICATE FI/40200

Our Ref. HEL-CERT190500310-01

Product	Cord set
Type	KC-015/KC003, cord H05VV-F 3G0,75-1,5 KC-015/KC003R, cord H05VV-F 3G0,75-1,5 KC-015/KC003, cord H05Z1Z1-F 3G0,75-1,5 KC-015/KC003R, cord H05Z1Z1-F 3G0,75-1,5 KC-015A/KC003, cord H05VV-F 3G0,75-1,5 KC-015A/KC003R, cord H05VV-F 3G0,75-1,5 KC-015A/KC003, cord H05Z1Z1-F 3G0,75-1,5 KC-015A/KC003R, cord H05Z1Z1-F 3G0,75-1,5
Trade mark	**KING-CORD**
Certificate Holder	King Cord Co., Ltd. 8F-3 No.124 Sianjheng 3rd. Rd., 302 Jhubei, Hsinchu County, Taiwan
Technical information	10 A; 250 V~; IP20
Other information	Standard sheet VII (Plug). Standard sheet C13 of EN 60320-3 (Connector) Max cord length 2m for 0,75mm²
The product is certified according to the following standard(s)	EN 60799:1998
Validity	This certificate is valid until 2024-05-10 provided that the Conditions for FI certification are met. This certificate includes the right to use the FI mark under the condition that product changes (if any) will be approved at SGS Fimko before the product is brought onto market.
Directive information	The certified product(s) fulfils requirements of above mentioned standard(s) which are harmonised under the Low Voltage Directive (2014/35/EU) at the date of issue of the certificate.
Date of issue	2019-05-10
	SGS Fimko Ltd
Signature	Matti Huttunen Certification Engineer

This certificate has 1 appendix

This certificate is issued by the company under its General Conditions for Certification Services accessible at http://www.sgs.fi/en/Terms-and-Conditions.aspx. Attention is drawn to the limitations of liability defined therein and in the Test Report here above mentioned which findings are reflected in this certificate. Any unauthorized alteration, forgery or falsification of the content or appearance of this document is unlawful and offenders may be prosecuted to the fullest extent of the law.

SGS Fimko Ltd. | Särkiniementie 3 P.O.Box 30 FI-00211 Helsinki, Finland
t. +358 9 696 361 f. +358 9 692 5474 www.sgs.fi
Business ID 0978538-5 Member of the SGS Group (SGS SA)

Appendix to Certificate: FI/40200

Manufacturer

King Cord Co., Ltd.
8F-3 No.124 Sianjheng 3rd. Rd., 302 Jhubei, Hsinchu County, Taiwan

Manufacturing sites

King-Cord Electronics (Shenzhen) Co., Ltd.
No. B2 The West Industry Park of Tan Tou, Song Gang Town, Bao'An District, Shenzhen, 518105, Guangdong, China

Additional information

The products have certificate No. 1909127 issued by Intertek Semko AB in accordance with the Nordic Certification Service system.

FINAS
Finnish Accreditation Service
S003 (EN ISO/IEC 17065)

Object / part No.	Manufacturer/ trademark	Type / model	Technical data	Standard	Mark(s) of conformity
Plug	King Cord Co., Ltd.	KC-015, KC-015A	16A 250V~, IP20, Class I, comply with CEE 7 / VII, KC-015 with lateral cord entry, KC-015A with longitudinal cord entry	IEC 60884-1; SS 428 0834	CB SE-83780; S: 1708751
Connector	King Cord Co., Ltd.	KC-003, KC-003R	10A 250V~, IP20, Class I, standard sheet C13 of IEC/EN 60320-3, KC-003 with longitudinal cord entry, KC-003R with lateral cord entry.	IEC/EN 60320-1	CB SE-87940; S: 1715055
Flexible cable	Shenzhen Baohing Electric Wire & Cable Manufacture Co., Ltd.	H05VV-F	3G0,75-1,5mm²	EN 50525-2-11	VDE 103727
		H05Z1Z1-F	3G0,75-1,5mm²	EN 50525-3-11	VDE 40023534
Flexible cable, alternative	I-Sheng Electric Wire & Cable Co., Ltd.	H05VV-F	3G 0,75-1,5mm²	EN 50525-2-11	VDE 40006070

This certificate replaces previous certificate FI 28642 dated 8 July 2014. Renewal of the certificate.

As shown in the Test Report(s) No(s): 190301450SHA-001

This certificate is issued by the company under its General Conditions for Certification Services accessible at http://www.sgs.fi/en/Terms-and-Conditions.aspx. Attention is drawn to the limitations of liability defined therein and in the Test Report here above mentioned which findings are reflected in this certificate. Any unauthorized alteration, forgery or falsification of the content or appearance of this document is unlawful and offenders may be prosecuted to the fullest extent of the law.

SGS Fimko Ltd. | Särkiniementie 3 P.O.Box 30 FI-00211 Helsinki, Finland
t. +358 9 696 361 f. +358 9 692 5474 www.sgs.fi
Business ID 0978538-5 Member of the SGS Group (SGS SA)

Mole

IMQ S.p.A. - Società con Socio Unico
I-20138 Milano - via Quintiliano, 43
tel. 0250731 (r.a.) - fax 0250991500
e-mail: info@imq.it - www.imq.it

Rea Milano 1595884
Registro Imprese Milano 12898410159
C.F./P.I. 12898410159
Capitale Sociale € 4.000.000

CA02.00940
SN.B001I4

PID:
02117000
CID:
C.1993.5052

Certificato di approvazione

Approval certificate

ACCREDIA
L'ENTE ITALIANO DI ACCREDITAMENTO

PRD N° 005B

Membro degli Accordi di Mutuo Riconoscimento EA, IAF e ILAC
Signatory of EA, IAF and ILAC Mutual Recognition Agreements

IMQ, ente di certificazione accreditato, autorizza la ditta

IMQ, accredited certification body, grants to

King Cord Co., Ltd.
8F-3 No.124 Sianjheng 3rd Rd
302 JHUBEI CITY, HSINCHU COUNTRY
TW - Taiwan

all'uso del marchio

the licence to use the mark

IMQ

Il presente certificato è soggetto alle condizioni previste nel Regolamento "MARCHI IMQ - Regolamento per la certificazione di prodotti" ed è relativo ai prodotti descritti nell'Allegato al presente certificato.

KING-CORD Confidential/Proprietary

per i seguenti prodotti

for the following products

Cordoni per connettore
(Rif. di tipo KC-003 / KC-015A)

Cord sets
(Type ref. KC-003 / KC-015A)

This certificate is subjected to the conditions foreseen by Rules "IMQ MARKS - RULES for product certification" and is relevant to the products listed in the annex to this certificate.

Emesso il / Issued on ***2001-12-21***

Aggiornato il / Updated on ***2019-09-18***

Sostituisce / Replaces ***2011-02-28***

IMQ S.p.A.

IMQ S.p.A. - Società con Socio Unico
I-20138 Milano - via Quintiliano, 43
tel. 0250731 (r.a.) - fax 0250991500
e-mail: info@imq.it - www.imq.it

Rea Milano 1595884
Registro Imprese Milano 12898410159
C.F./P.I. 12898410159
Capitale Sociale € 4.000.000

Allegato - Certificato di approvazione
Annex - Approval certificate

Emesso il / Issued on 2001-12-21
Aggiornato il / Updated on 2019-09-18
Sostituisce / Replaces 2011-02-28

Prodotto | Product

Cordoni per connettore
Cord sets

Concessionario | Licence Holder

King Cord Co., Ltd.
8F-3 No.124 Sianjheng 3rd Rd
302 JHUBEI CITY, HSINCHU COUNTRY
TW - Taiwan

Marchio | Mark

IMQ

Costruito a | Manufactured at

PI.C0000I C01047943

SongGang Town,Bao'An Dist.Shenzhen City, China

Copia del presente certificato deve essere conservata presso i luoghi di produzione sopra elencati.

Copy of this certificate must be available at the manufacturing places listed above

Norme / Specifiche tecniche

Prodotto/i conforme/i alle Norme/Specifiche tecniche:

EN 60799:1998

Prodotti conformi agli obiettivi di sicurezza della Direttiva B.T. 2014/35/UE (Allegato I).

Standards / Technical specifications

Product/s complying to Standards/Technical specifications:

EN 60799:1998

Products meeting the safety objectives of Low Voltage Directive 2014/35/EU (Annex I).

Rapporti | Test Reports

MI19-0042335-01

Caratteristiche tecniche | Technical characteristics

Tipo di presa di connettore / Type of connector	**2P+T foglio C13 / 2P+E S.S. C13**
Tensione nominale / Rated voltage	**250V**
Corrente nominale / Rated current	**10A**
Tipo di applicazione / Type of application	**fredda / for cold conditions**
Tipo di morsetti / Type of terminals	**morsetti aggraffati / crimped connections**
Materiale della custodia / Material of the cover	**termoplastico / thermoplastic**
Uscita cavo / Cable exit	**assiale / straight**

Articoli (con dettagli) | Articles (with details)

AR.B00ASC

Marca presa / Connector trade mark	**KING-CORD**
Riferimento di tipo presa / Type reference of connector	**KC-003**
Tipo di spina / Appliance inlet	**S31**
Riferimento di tipo spina / Type reference of plug	**KC-015A**
Marca spina / Plug trade mark	**KING-CORD**
Tipo di cavo / Type of cable	**H05VV-F**
Sezione nominale / Section areas	**3G0,75mm²**

AR.B00ASD

Marca presa / Connector trade mark	**KING-CORD**
Riferimento di tipo presa / Type reference of connector	**KC-003**
Tipo di spina / Appliance inlet	**S31**
Riferimento di tipo spina / Type reference of plug	**KC-015A**
Marca spina / Plug trade mark	**KING-CORD**
Tipo di cavo / Type of cable	**H05VV-F**

KING-CORD Confidential Proprietary

Sezione nominale / Section areas	**3G1mm²**

AR.B00ASE

Marca presa / Connector trade mark	**KING-CORD**
Riferimento di tipo presa / Type reference of connector	**KC-003**
Tipo di spina / Appliance inlet	**S31**
Riferimento di tipo spina / Type reference of plug	**KC-015A**
Marca spina / Plug trade mark	**KING-CORD**
Tipo di cavo / Type of cable	**H05VV-F**
Sezione nominale / Section areas	**3G1,50mm²**

AR.B00ASF

Marca presa / Connector trade mark	**KING-CORD**
Riferimento di tipo presa / Type reference of connector	**KC-003**
Tipo di spina / Appliance inlet	**S31**
Riferimento di tipo spina / Type reference of plug	**KC-015**
Marca spina / Plug trade mark	**KING-CORD**
Tipo di cavo / Type of cable	**H05VV-F**
Sezione nominale / Section areas	**3G0,75mm²**

AR.B00ASG

Marca presa / Connector trade mark	**KING-CORD**
Riferimento di tipo presa / Type reference of connector	**KC-003**
Tipo di spina / Appliance inlet	**S31**
Riferimento di tipo spina / Type reference of plug	**KC-015**
Marca spina / Plug trade mark	**KING-CORD**
Tipo di cavo / Type of cable	**H05VV-F**
Sezione nominale / Section areas	**3G1mm²**

AR.B00ASH

Marca presa / Connector trade mark	**KING-CORD**
Riferimento di tipo presa / Type reference of connector	**KC-003**
Tipo di spina / Appliance inlet	**S31**
Riferimento di tipo spina / Type reference of plug	**KC-015**
Marca spina / Plug trade mark	**KING-CORD**
Tipo di cavo / Type of cable	**H05VV-F**
Sezione nominale / Section areas	**3G1,50mm²**

KING-CORD Confidential Proprietary

Diritti di concessione | Annual Fees

SN.B001I4	**BTT.021100.DA19**	*Importo modelli IMQ - 0211 - Prese, spine e connettori di uso domestico / IMQ models - 0211 - Plugs and appliance couplers for domestic purposes*	1

Schweizerische Eidgenossenschaft
Confédération suisse
Confederazione Svizzera
Confederaziun svizra

Swiss Confederation

Federal Inspectorate for Heavy Current Installations ESTI
Market Surveillance/Safety Mark

King Cord Co. Ltd.
8F-3, No. 124, Sianjheng 3rd. Rd.
Jhubei City, Hsinchu County302
TAIWAN

Client no.	Your reference	Our reference	Date
2612	Grace Kao	Christoph Meile	22.05.2023

Authorization

Number: **23.0337**
valid until: **19.03.2024**

Marking: KT 501
Company Logo

Based on the documents contained in file **17-BS-0158**, the Federal Inspectorate for Heavy Current Installations grants the firm named above the right to put the equipment listed below on the market marked with the Swiss safety mark in accordance with the NEV.

Equipment: **Connector, non-rewirable**

Tradename: **KING-CORD**

Type designation	Nominal values
KC-003	250V~ 10A L+N+PE standard sheet C13 with non-rewirable cords: H05VV-F 3G 0.75mm² [Baohing] H05VV-F 3G 1.00mm² [Baohing] H05VV-F 3G 1.50mm² [Baohing] H05VV-F 3G 0.75mm² [I-Sheng SGIS] H05VV-F 3G 1.00mm² [I-Sheng SGIS] H05VV-F 3G 1.50mm² [I-Sheng SGIS] H05VV-F 3G 0.75mm² [King-Cord] H05VV-F 3G 1.00mm² [King-Cord] H05VV-F 3G 1.50mm² [King-Cord]

Federal Inspectorate for Heavy Current Installations ESTI
Luppmenstrasse 1, CH-8320 Fehraltorf
T +41 58 595 18 18
mub.bs.info@esti.ch
www.esti.admin.ch

SWISS ACCREDITATION sas.admin.ch SCESp 0033

Schweizerische Eidgenossenschaft
Confédération suisse
Confederazione Svizzera
Confederaziun svizra

Swiss Confederation

Authorization	Number: **23.0337**
Type designation	Nominal values
KC-003R	250V~ 10A L+N+PE standard sheet C13 with non-rewirable cords: H05VV-F 3G 0.75mm² [Baohing] H05VV-F 3G 1.00mm² [Baohing] H05VV-F 3G 1.50mm² [Baohing] H05VV-F 3G 0.75mm² [I-Sheng SGIS] H05VV-F 3G 1.00mm² [I-Sheng SGIS] H05VV-F 3G 1.50mm² [I-Sheng SGIS] H05VV-F 3G 0.75mm² [King-Cord] H05VV-F 3G 1.00mm² [King-Cord] H05VV-F 3G 1.50mm² [King-Cord]
Protection class:	for class I equipment
Protection degree:	ordinary
Basis:	CB / VDE / DE1-58795 / 17.05.2017 Test Report / VDE / 231535-CC1-2 / 16.05.2017
Remark:	Manufacturing sites: 1. King-Cord Electronics (Shenzhen) Co., Ltd. No. B2 The West Industry Park of TanTou, Song Gang Town, 518105 Bao-An District, Shenzhen City, Guangdong, CHINA
Test standards:	EN 60320-1:2015 EN 60320-3:2014

Federal Inspectorate for Heavy Current Installations ESTI

Peter Fluri
Head of Market Surveillance/Safety Mark

中国国家强制性产品认证证书

证书编号：2002010204019895

发证日期：2023 年 04 月 23 日
有效期至：2028 年 04 月 22 日

认证委托人名称及注册地址 光州电子(深圳)有限公司
深圳市宝安区松岗街道潭头西部工业园B2栋一楼、二楼西北面、三楼

产品生产者名称及注册地址 光州电子(深圳)有限公司
深圳市宝安区松岗街道潭头西部工业园B2栋一楼、二楼西北面、三楼

生产企业名称及生产地址 光州电子(深圳)有限公司
深圳市宝安区松岗街道潭头西部工业园B2栋一楼、二楼西北面、三楼

产品名称和系列规格、型号 用于冷条件I类设备的10A 250V连接器
KC-003、KC-003R 10A 250V～（配60227IEC53 3×0.75mm2、60227IEC53 3×1mm2、60227IEC53 3×1.5mm2）

产品标准和技术要求 GB/T 17465.1-2022;GB/T 17465.6-2022

上述产品符合 CNCA-C02-01:2014 认证规则的要求，特发此证。

证书有效期内本证书的有效性依据发证机构的定期监督获得保持。

本证书为变更证书，证书首次颁发日期：2002 年 10 月 28 日

经中国合格评定国家认可委员会认可 CNAS C001-P

可通过扫描下方二维码或登录国家认监委网站（www.cnca.gov.cn）查验证书信息

签发：谢肇煦

中国质量认证中心

CERTIFICATE FOR CHINA COMPULSORY PRODUCT CERTIFICATION

CERTIFICATE NO.: 2002010204019895

Valid from: Apr.23,2023

Valid until: Apr.22,2028

NAME AND REGISTERED ADDRESS OF THE APPLICANT	KING CORD ELECTRONIC (SHENZHEN)CO.,LTD 1F,North-West of 2F,3F of No.B2，The West Industry Park of Tantou, SongGang Street,Bao'An District, Shenzhen City
NAME AND REGISTERED ADDRESS OF THE MANUFACTURER	KING CORD ELECTRONIC (SHENZHEN)CO.,LTD 1F,North-West of 2F,3F of No.B2，The West Industry Park of Tantou, SongGang Street,Bao'An District, Shenzhen City
NAME AND LOCATION OF THE FACTORY	KING CORD ELECTRONIC (SHENZHEN)CO.,LTD 1F,North-West of 2F,3F of No.B2，The West Industry Park of Tantou, SongGang Street,Bao'An District, Shenzhen City
PRODUCT MODEL(S)	10A 250V CONNECTOR FOR CLASS I EQUIPMENT FOR COLD CONDITIONS KC-003、KC-003R 10A 250V～ (with60227IEC53 3×0.75mm2、60227IEC53 3×1mm2、60227IEC53 3×1.5mm2)
STANDARDS AND TECHNICAL REQUIREMENTS	GB/T 17465.1-2022;GB/T 17465.6-2022

This is to certify that the above mentioned product(s) complies with the requirements of implementation rules for compulsory certification(REFNO. CNCA-C02-01:2014)

The validity of the certificate is subject to positive result of the regular follow up inspection by issuing certification body until the expiry date.

Date of original issued: Oct.28,2002

Accredited by China National Accreditation Service for Conformity Assessment CNAS C001-P

The certificate information is available through the QR code below or CNCA's website: www.c

SIGNATURE:

CHINA QUALITY CERTIFICATION CENTRE

OFFICE OF **FAIR TRADING**
NSW Consumer Protection Agency
Department of Commerce

The Manager
King-Cord Co Ltd
C/- Ms Grace Kao
VDE Representative Office - Giant Lab Co
7F-2, No 600, Sec 2, Chung Hua Road
TAIPEI 108 TAIWAN

File Ref: N20414/1
Contact: Liz Whitehead
Telephone: (02) 9895 0702
Facsimile: (02) 9895 0423

Dear Sir/Madam

CERTIFICATE OF APPROVAL NUMBER: 20414 AND MODIFICATION/S

Appliance Connector

Please find enclosed a Certificate of Approval and addendum as sought by your application.

Articles of the approved type/s may now be marketed in any State or Territory of Australia, provided they are marked with-
(a) the mark (or marks) shown on the Certificate; or
(b) the Regulatory Compliance Mark (RCM) provided that the requirements of all relevant parts of AS/NZS 4417 applicable to the article are fulfilled.

THE APPROVAL EXPIRES ON THE DATE SHOWN ON THE CERTIFICATE unless it is renewed, extended, suspended or cancelled.

Any sample/s held by the Department should be collected within fifteen (15) days of this letter or the sample/s will be destroyed.

Yours faithfully

for Commissioner for Fair Trading
12 July 2004

Ref: N20414/1

ADDENDUM TO CERTIFICATE OF APPROVAL No 20414

Particulars of Modification(s)

Original Model KC-003 alternatively moulded to an Australian approved or <HAR> certified H05VV-F 3G1.5mm² flexible cord.

Original Model KC-003 alternatively moulded to an Australian approved or <HAR> certified H05VV-F 3G0.75mm² flexible cord of length not exceeding 2 metres.

Approved: 12 July 2004

for Commissioner for Fair Trading

Head Office 1Fitzwilliam Street Parramatta PO Box 972 NSW 2124 Australia
Tel (02) 9895 0111 Fax (02) 9895 0222 DX 28437 Parramatta

NSW GOVERNMENT | Fair Trading

File Ref: NSW20414/3
Contact: Admin Clerk
Telephone: 02 9895 0722
Fax: 02 9895 9917

Ms Grace Kao
King-Cord Co Ltd
C/- VDE Global Services HK Ltd Taiwan Branch
9F, No 77, Sec 1, Zhonghua Road
TAIPEI CITY
Taiwan 100

Dear Sir/Madam

RENEWAL OF CERTIFICATE OF APPROVAL: NSW20414

Appliance Connector

Please find enclosed an addendum to the certificate as sought in your application.

THE APPROVAL NOW EXPIRES ON 12/07/2019 unless it is renewed, extended, suspended or cancelled.

Any sample/s held by this Office should be collected within fifteen (15) days of this letter or the sample/s will be destroyed.

Yours faithfully,

For Commissioner for Fair Trading 18 June 2014

Energy & Utilities Unit, NSW Fair Trading,
PO Box 972, Parramatta NSW 2124
02 9895 0722

Email: energyapprovals@services.nsw.gov.au
Website: www.fairtrading.nsw.gov.au

OFFICE OF **FAIR TRADING**
A Consumer Protection Agency
Department of Commerce

Certificate Number: 20414

CERTIFICATE OF APPROVAL

ISSUED PURSUANT TO SECTION 21C OF THE ELECTRICITY SAFETY ACT 1945

ISSUED TO:

King-Cord Co Ltd

CLASS OF ARTICLE:

Appliance Connector

DESCRIPTION OF ARTICLE:

Non-rewireable appliance connector type C13 integrally moulded to an Australian approved or <HAR> certified H05VV-F 3G1.0mm² flexible cord.
Trade name "King-Cord"
240V 10A

EXAMINED FOR COMPLIANCE WITH: AS/NZS 3109:1996 A1

TYPE REFERENCE CODE: KC-003

APPROVAL MARK:

Each electrical article of the abovementioned type shall be marked with Approval Number N20414 or N13389

DATE OF APPROVAL: 12 July 2004
This approval expires 12 July 2009 unless suspended, cancelled, renewed or extended.

for Commissioner for Fair Trading

NSW GOVERNMENT | Fair Trading

Ref: NSW20414/3

RENEWAL OF CERTIFICATE OF APPROVAL: NSW20414

Particulars of Renewal

The approval of Appliance Connector Model No. KC-003 and all approved modifications has been renewed for a period of FIVE years.

The Approval expires on 12/07/2019 unless it is renewed, extended, suspended or cancelled.

For Commissioner for Fair Trading

Energy & Utilities Unit, NSW Fair Trading,
PO Box 972, Parramatta NSW 2124
02 9895 0722

Email: energyapprovals@services.nsw.gov.au
Website: www.fairtrading.nsw.gov.au

NSW GOVERNMENT | Fair Trading

File Ref: NSW20414/4
Contact: Admin Clerk
Telephone: 02 9895 0722

Ms Grace Kao
King-Cord Co Ltd
C/- VDE Global Services HK Ltd Taiwan Branch
9F, No 77, Sec 1, Zhonghua Road
TAIPEI CITY, Taiwan 100

Dear Sir/Madam

RENEWAL OF CERTIFICATE OF APPROVAL: NSW20414

Appliance Connector

Please find enclosed an addendum to the certificate as sought in your application.

THE APPROVAL NOW EXPIRES ON 12/07/2024 unless it is renewed, extended, suspended or cancelled.

Any sample/s held by this Office should be collected within fifteen (15) days of this letter or the sample/s will be destroyed.

Yours faithfully,

For Commissioner for Fair Trading

Energy & Utilities Unit, NSW Fair Trading,
PO Box 972, Parramatta NSW 2124
02 9895 0722

Email: energyapprovals@finance.nsw.gov.au
Website: www.fairtrading.nsw.gov.au

NSW GOVERNMENT Fair Trading

Ref: NSW20414/4

RENEWAL OF CERTIFICATE OF APPROVAL: NSW20414

Particulars of Renewal

The approval of Appliance Connector Model No. KC-003 and all approved modifications has been renewed for a period of FIVE years.

The Approval expires on 12/07/2024 unless it is renewed, extended, suspended or cancelled.

For Commissioner for Fair Trading

Energy & Utilities Unit, NSW Fair Trading,
PO Box 972, Parramatta NSW 2124
02 9895 0722

Email: energyapprovals@finance.nsw.gov.au
Website: www.fairtrading.nsw.gov.au

King-Cord Co.,Ltd						
Material Management Schedule					Edition:P	Date: JAN. 3, 2023
No	Banned or Restricted Substances		Threshold	Controlled Application	Effective Date	Test Methods
1	Metal	Cd and the Compound	<100ppm	Switches, springs, connectors, housings and PCBs, contacts, batteries	Restricted immediately	IEC 62321-5
2	Metal	Pb and the Compound	<1000ppm	Solder, glass, PVC stabilizer	Restricted immediatel	IEC 62321-5
			<40000ppm	Copper alloy containing	Copper alloy is exempt from ROHS exclusion "6C".	
3	Metal	Hg and the Compound	<1000ppm	All applications	Banned immediately	IEC 62321-4
4	Metal	Cr^{6+} and the Compound	<1000ppm	All applications	Restricted immediately	IEC 62321-7/ IEC 62321-5
5	Organic Bromine Compound	Phthalates (DEHP, DBP, BBP, DIBP)	<1000ppm	All applications	Banned immediately	IEC 62321-8
6	Organic Bromine Compound	Polybromides biphenyls(PBBs)	<1000ppm	All applications	Banned immediately	IEC 62321-6
7	Organic Bromine Compound	Polybromides Diphenyl Ethers(PBDEs)(Including decabromodiphenylether[DecaBDE])	<1000ppm	All applications	Banned immediately	IEC 62321-6
8	Organic Bromine Compound	Other Organic Bromine Compound	Not Detectable	All applications	Banned immediately	
9	Organic Chlorine Compound	Polychlorinated Biphenyls(PCB)	Not Detectable	All applications	Banned immediately	
10	Organic Chlorine Compound	Polychlorinated Naphthalenes(PCN)	Not Detectable	All applications	Banned immediately	
11	Organic Chlorine Compound	Polychlorinated Terphenyls(PCT)	Not Detectable	All applications	Banned immediately	
12	Organic Chlorine Compound	Short-chain chlorinated paraffins(SCCP)	Not Detectable	All applications	Banned immediately	
13	Organic Chlorine Compound	Other Organic Chlorin Compound	Not Detectable	All applications	Banned immediately	
14	Organic Tin Compound		Not Detectable	All applications	Banned immediately	
15	Asbesos		Not Detectable	All applications	Banned immediately	
16	Azo Compound		Not Detectable	All applications	Banned immediately	
17	Formaldehyde		Not Detectable	All applications	Banned immediately	ISO 17353
18	Beryllium oxide		Not Detectable	All applications	Banned immediately	
19	Hydrofluorocarbon(HFC),Perfluorocarbon(PFC)		Not Detectable	All applications	Banned immediately	
20	Perfluorooctane sulfonates(PFOS)		Not Detectable	All applications	Banned immediately	
21	Specific benzotriazole		Not Detectable	All applications	Banned immediately	
22	hexabromocyclododecane (HBCD)		Not Detectable	All applications	Banned immediately	
23	perfluorooctanoic acid, its salts, and its precursors (PFOA)		Not Detectable	All applications	Banned immediately	
24	long-chain perfluorocarboxylic acids, their salts, and their precursors (LC-PFCAs)		Not Detectable	All applications	Banned immediately	
25	The total Hg、Cd、 Cr、Pb in the packing should be below 100ppm				Restricted immediately	
	PS: KING-CORD is RoHS 2.0, EU REACH compliant and meets Sony SS-00259 Green Partner standards.					

KING-CORD CO.,LTD

CERTIFICATE OF COMPLIANCE

Edition: P

KING-CORD hereby warrants and guarantees that our product POWER SUPPLY CORDS is compliant with Directive(EU) 2015/863 amending 2011/65/EU Of the Council on the Restriction of the Use of Certain Hazardous Substances in Electrical and Electronic Equipment (RoHS 2.0), EU REACH(Registration, Evaluation, Authorization and Restriction of Chemicals) regulations and SONY SS-00259 standards.



William Cheng

President

JAN. 3, 2023