NOTES:
1. MATERIAL: SECC, t=1.0 mm.
2. a: M3 STANDOFF(SO) H=5.0 mm (x5).
3. b.: M3 STANDOFF(SO) H=12.0 mm (x14).
4. c: M3 TAPPING(DOWNWARD THREADED HOLE) (x18).
5. d: No.6-32 UNC TAPPING(DOWNWARD THREADED HOLE) (x2).
6. e: Ø3.50 CONTERSINK HOLE(CONTERSINK ANGLE 120°) (x2).
7. f.: Ø3.0 CONVEX H= 0.4 mm (x7).
8. g.: RIVETING INWARD (SIDE) (x8).
9. h.: M4 INSERT NUT (x1).
10. i.: RIVETING INWARD (BOTTOM)(x6).
11. j.: HALT SHEAR. (x3).
12. k.: No.6-32 UNC USB COVER(LONG) (x1).
13. l.: No.6-32 UNC USB COVER(SHORT) (x1).
14. m.: ● SPOT WELDING. (x12).
15. ALL FLAT HEAD SCREWS(110°) MUST SINK COMPLETELY DO NOT OUTCROP.
16. THE BURR OF ALL PUNCHED HOLES AND I/O HOLES SHOULD BE INWARD.
17. THE BURR ON ALL EDGES MUST BE < 0.05 mm.
18. REMOVE BURRS FROM THE INSIDE OF SHEET METAL (x2).
19. IQC INSPECTION DOCUMEMNT NO.: QW1-0149

REV.	DATE	DESCRIPTION	BY	APVD

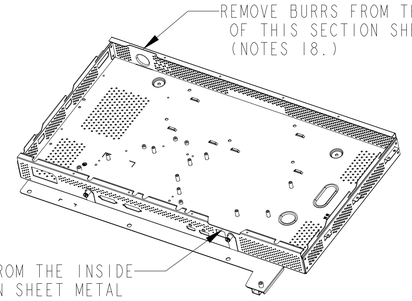

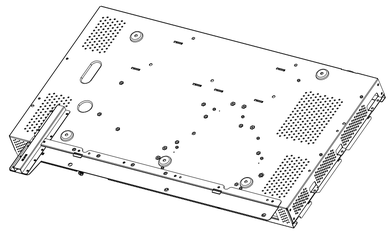

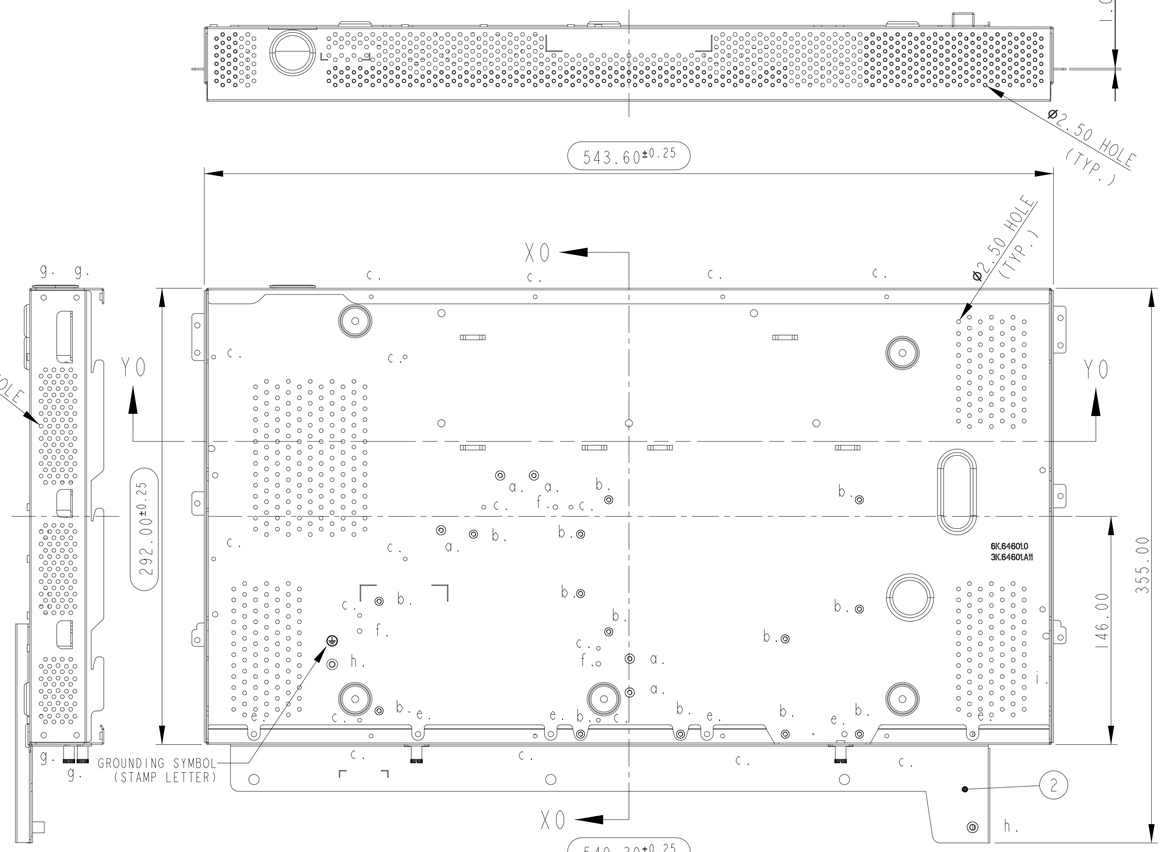

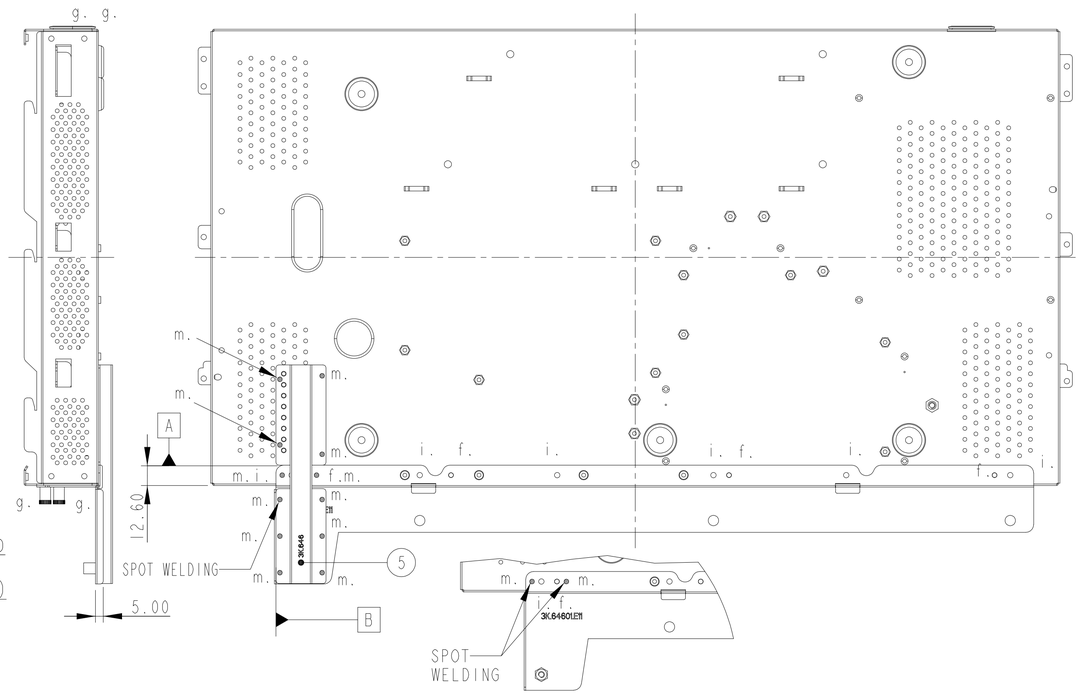

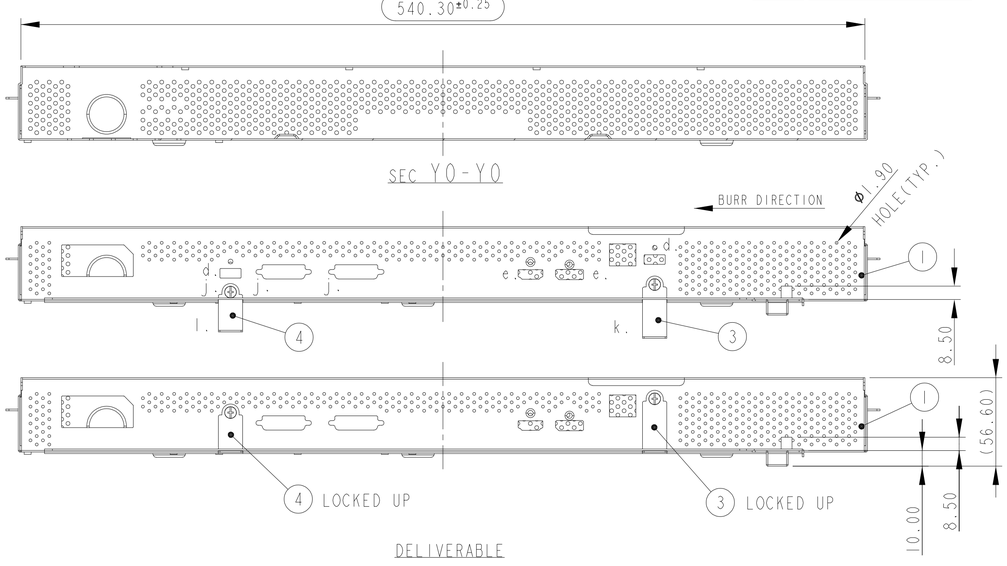

ITEM	DIVA P/N	DIVA DESCRIPTION	Q'TY	QISDA P/N	QISDA DESCRIPTION	REMARKS
	2AAD6640123	MAIN BRACKET ASSY(RUG5513AMI)	1	6K.64601.0	ASSY BKT MAIN RUG5513AMI	
1	3MD664ME070	MAIN BRACKET (RUG5513AMI)	1	3K.64601.A11	BKT MAIN RUG5513AMI	TOOLING PART
2	3MD664ME120	MAIN BRACKET BOTTOM (RUG5513AMI)	1	3K.64601.E11	BKT MAIN BOT RUG5513AMI	TOOLING PART
3	3MD664ME130	USB COVER(L)(RUG5513AMI)	1	3K.64601.F11	BKT USB L RUG5513AMI	TOOLING PART
4	3MD664ME140	USB COVER(S)(RUG5513AMI)	1	3K.64601.G11	BKT USB S RUG5513AMI	TOOLING PART
5	3MD664ME170	MAIN BRACKET SHELF (RUG5513AMI)	1		BKT MAIN SHELF RUG5513AMI	NCT PART

6K.64601.001

RANGE OF DIMENSION	TOLERANCE CLASS DESIGNATION f	V m	c	THIRD ANGLE PROJECTION	UNITS: mm	SCALE: 1/2	SHEET:1 OF 1	MODEL NO.: RUG5513AMI
					MATERIAL:SECC, t=1.0	TREATMENT: DEGREASE		
UP TO 30	±0.10	±0.20	±0.50	DSGD by Ferris Tsai	2024-08-21	PART NAME: MAIN BRACKET ASSY		
ABOVE 30~120	±0.15	±0.30	±0.80	CHK by				
ABOVE 120~315	±0.20	±0.50	±1.20	APVD by		PART NO.: 2AAD6640123		REV. 0
ABOVE 315~1000	±0.30	±0.80	±2.00	APVD No. :	3D FILE NAME : 55_FLEX_ASM_MAIN_BKT_DL	DIVA Laboratories ,Ltd.		
ANGLE ±1° (±1.75/100)								