REV	ECN. NO.	REVISIONS	REV. DRAWN	DATE
A	----	整合图纸，初版发行	zhangqiang	2019.05.29
B	----	公差修改	zhangqiang	2020.11.24
C	----	公差分析	zhangqiang	2022.12.07

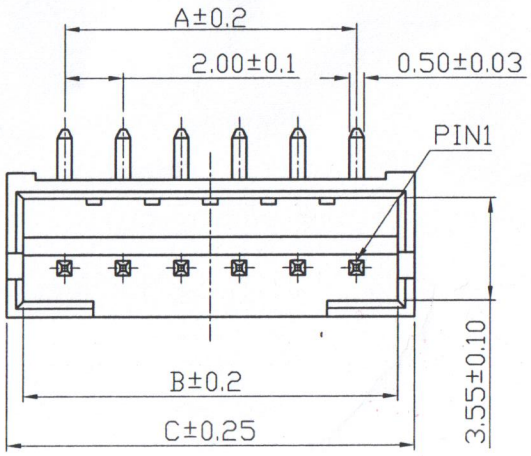

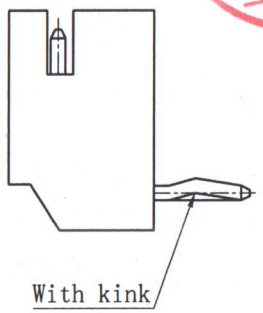

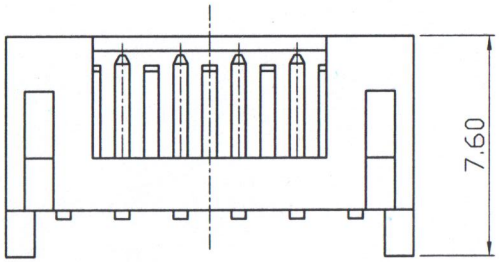

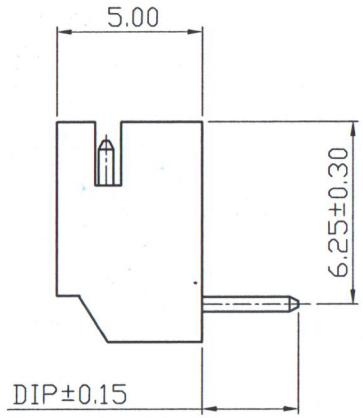

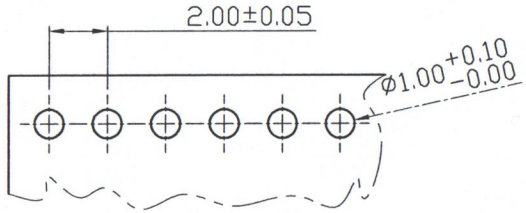

P.C.B. Hole Diomensions

WAFER.

. Part No1: JS-1125R-XXXXXX-XXXX-NH

- Poles: 02~16
- Blank: Normal
- K: Kink Foot
- Blank: DIP=3.30
- B: DIP=2.40
- C: DIP=2.30
- D: DIP=2.70
- (plating) Blank: Tin Plated
- (M): Matte sn
- (materail) Blank: PA66
- D1:PA66+15%GF
- NH: Halogen Free
- Blank: Normal
- Blank: Nature (color)
- RD: Red
- GN: Green
- BK: Black
- BU: Blue

SPECIFICATIONS:

. Voltage Rating: 100V AC/DC
. Current Rating : 2A AC/DC
. Withstanding Voltage : 800V AC/minute
. Insulation Resinstance : 1000MΩ min
. Temperature Range : -25° C~+85° C
. Contact Resinstance : 20mΩ max
. Material : Contact : Brass, Tin Plated/Matte sn
Base : Nylon, UL 94V-0
. Q'ty : Bag
. Halogen free product identification LOGO on the packing

POLES	DIMENSION		
	A	B	C
02	2.00	4.85	6.00
03	4.00	6.85	8.00
04	6.00	8.85	10.00
05	8.00	10.85	12.00
06	10.00	12.85	14.00
07	12.00	14.85	16.00
08	14.00	16.85	18.00
09	16.00	18.85	20.00
10	18.00	20.85	22.00
11	20.00	22.85	24.00
12	22.00	24.85	26.00
13	24.00	26.85	28.00
14	26.00	28.85	30.00
15	28.00	30.85	32.00
16	30.00	32.85	34.00

X.± 0.30	X°± 3.0°	UNITS mm	NAME(INTENDED USE) Customer
.X± 0.20	.X°± 1.0°	MAT'L	PART NO.(INTENDED USE) JS-1125R-XX
.XX± 0.10	.XX°± 0.5°	FINISH	APPD:
.XXX±0.05	.XXX°± ---	Q'TY	CHKD:
			DR: zhangqiang 2019.05.29

THESE DRAWINGS AND SPECIFICATIONS ARE THE PROPERTY OF CHYAO SHIUNN ELECTRONIC CO., LTD. AND SHALL NOT BE REPRODUCED COPIED OR USED IN ANY MANNER WITHOUT THE PRIOR WRITTEN CONSENT OF CHYAO SHIUNN ELECTRONIC CO., LTD.

CHYAO SHIUNN ELECTRONIC (SHANGHAI) CO.,LTD.

TITLE: 2.00mm Crimp Style Connector

DWG NO.: 020-0013-1125R-01

SCALE	SHEET	REV.
4:1	1/1	/

符合环境管理物质