REV.	DATE	DESCRIPTION	BY	APVD

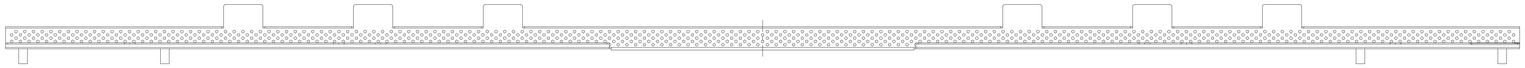



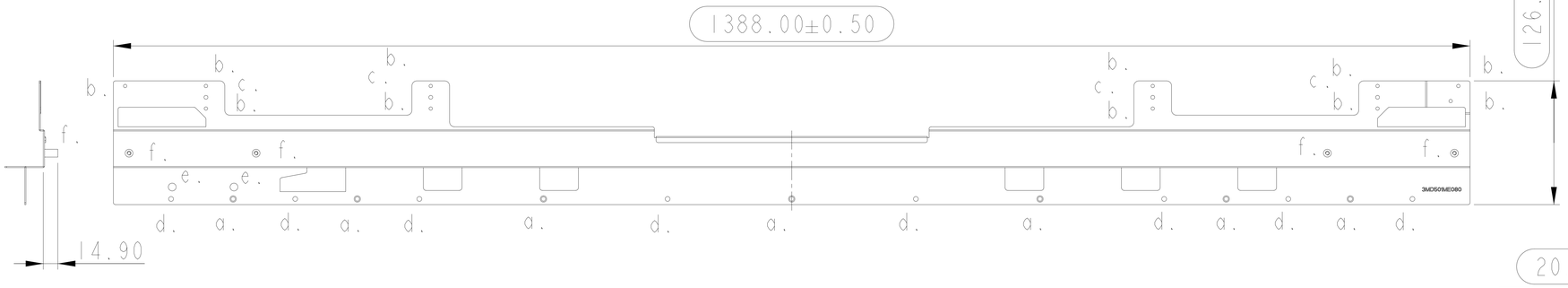

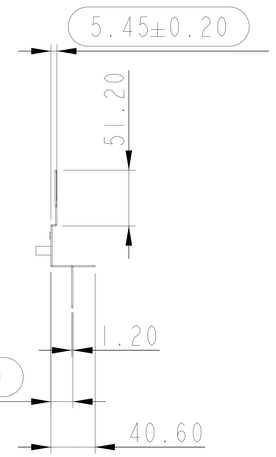

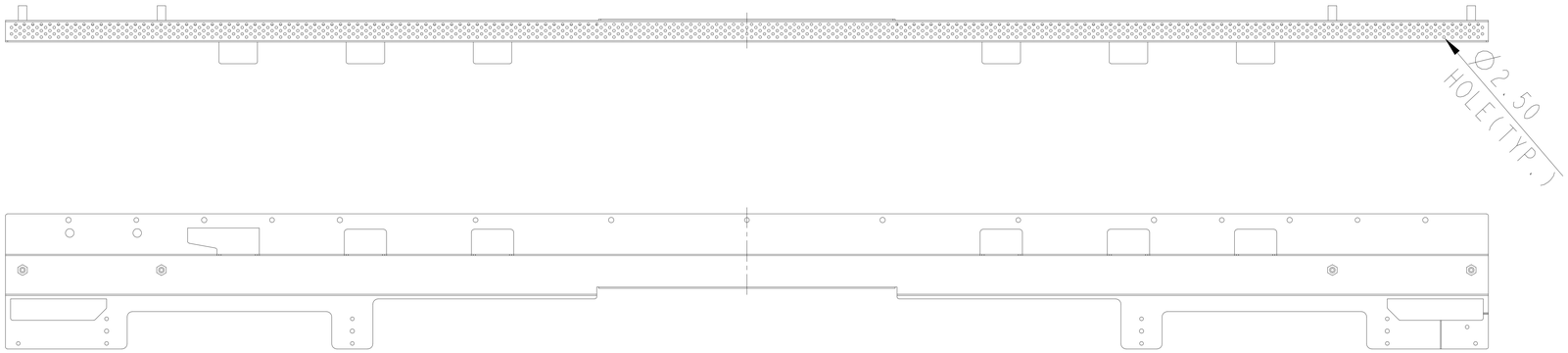

NOTES:
1. MATERIAL: SECC, t=1.2mm.
2. a.: Ø4.50 CONTERSINK HOLE(CONTERSINK ANGLE 120°)(x7).
3. b.: Ø3.50 THROUGH HOLE(x11).
4. c.: Ø4.0 THROUGH HOLE(x4).
5. d.: Ø5.0 THROUGH HOLE(x8).
6. e.: Ø8.0 THROUGH HOLE(x2).
7. f: M4 STANDOFF(SO) H=14.9mm(x4).
8. ALL FLAT HEAD SCREWS(110°) MUST SINK COMPLETELY DO NOT OUTCROP.
9. IQC INSPECTION DOCUMEMNT NO.: QWI-014.

RANGE OF DIMENSION	TOLERANCE CLASS DESIGNATION f	V m	V c
UP TO 30	±0.10	±0.20	±0.50
ABOVE 30~120	±0.15	±0.30	±0.80
ABOVE 120~315	±0.20	±0.50	±1.20
ABOVE 315~1000	±0.30	±0.80	±2.00
ANGLE ±1° (±1.75/100)			

THIRD ANGLE PROJECTION

DSGD by	Ferris Tsai	2020-05-13	
CHK by	-	-	
APVD by	Laslie	2020.05.13 14:06:26 +08'00'	
APVD NO.:	M3239	3D FILE NAME:	SC65812_ASM-PANEL_BOTTOM_BKT

UNITS: mm	SCALE: 1/2	SHEET: 1 OF 1	MODEL NO.: SC65812
MATERIAL: SECC, t=1.20	TREATMENT: DEGREASE		
PART NAME: PANEL BOTTOM BRACKET			
PART NO.: 3MD501ME080	REV. 0		

DIVA Laboratories, Ltd.