Customer	Qisda	Customer P/N	1J.42068.001	Spec Version	00-4
Supplier	LITEON	Maker P/N	FACK002DP	Component Type	UC14

Form Version: 3.0

Transformer / Coil Specification

Customer	Qisda
Customer P/N	1J.42068.001
Core Type	UC14
Maker P/N	FACK002DP
Create Date	26.JUN.2023
Spec Version	00-4
Maker Factory Address	惠 州 市 力 信 電 子 有 限 公 司 HUIZHOU LI SHIN ELECTRONIC LIMITED. 廣東省惠州市博羅縣羅陽鎮義和宏博工業城 Yi Ho Houng Bo Industrial City, Lo Yang Town, Bo Lo Hsien, Huizhou Guangdong, China. TEL:(752)6863222 FAX:(752)6863234 . 6863235

Customer	Qisda	Customer P/N	1J.42068.001	Spec Version	00-4
Supplier	LITEON	Maker P/N	FACK002DP	Component Type	UC14

Form Version: 3.0

History

Version	Original	Change To	Date	Remark
00-0	Initial Release		27.NOV.2019	
00-0	成品無含浸 無客戶料號	新增成品含浸 增加客戶料號	10.DEC.2019	
00-1	無成品外觀圖 成品含浸 成品無點膠	新增成品外觀圖 取消成品含浸 增加成品點膠	08.JAN.2020	
00-2	成品無含浸 成品點膠	成品含浸 成品不點膠	09.JAN.2020	
00-3	無包材圖面	新增包材圖面	24.FEB.2020	
00-4	CORE 材質:M10K/R10K	取消 M10K/R10K	26.JUN.2023	

Customer	Qisda	Customer P/N	1J.42068.001	Spec Version	00-4
Supplier	LITEON	Maker P/N	FACK002DP	Component Type	UC14

Form Version: 3.0

- Content:
  - Configuration & Dimension
  - Bobbin/Core Dimension
  - Winding Specification
  - Electrical Characteristics
  - Material List
  - Package Specification
  - Reliability Criteria
  - Qisda Check List

Customer	Qisda	Customer P/N	1J.42068.001	Spec Version	00-4
Supplier	LITEON	Maker P/N	FACK002DP	Component Type	UC14

Form Version: 3.0

● Configuration & Dimension

(Should be including Top View、Front View、Bottom view、Side View、Pin Pad Drawing、Picture of Core Tapping &Other note)

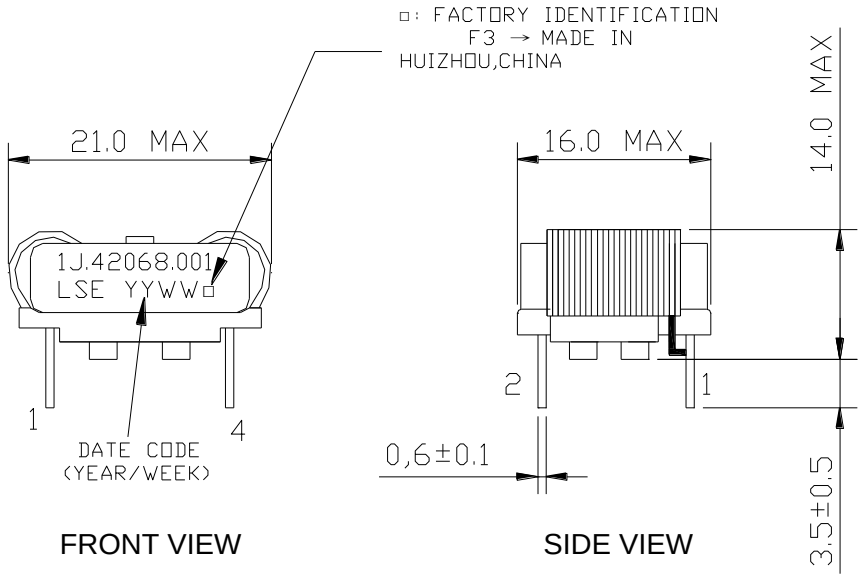

FRONT VIEW SIDE VIEW



VIEW A

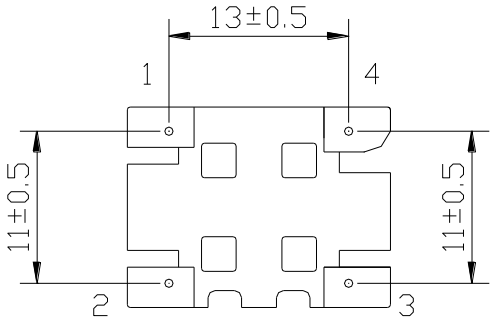

BOTTOM VIEW

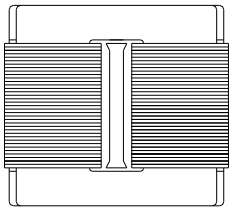

TOP VIEW

Customer	Qisda	Customer P/N	1J.42068.001	Spec Version	00-4
Supplier	LITEON	Maker P/N	FACK002DP	Component Type	UC14

Form Version: 3.0

Note:

No.	Deacription	Remark
1	Marking Rule	【YYWW】:Date Code 【□】: Factory F3：Made in Huizhou
2	WEIGHT is 11.7± 2 g.	
3	Photo for Final sample	VIEW A
4	成品須含浸	

Customer	Qisda	Customer P/N	1J.42068.001	Spec Version	00-4
Supplier	LITEON	Maker P/N	FACK002DP	Component Type	UC14

Form Version: 3.0

Base Dimension

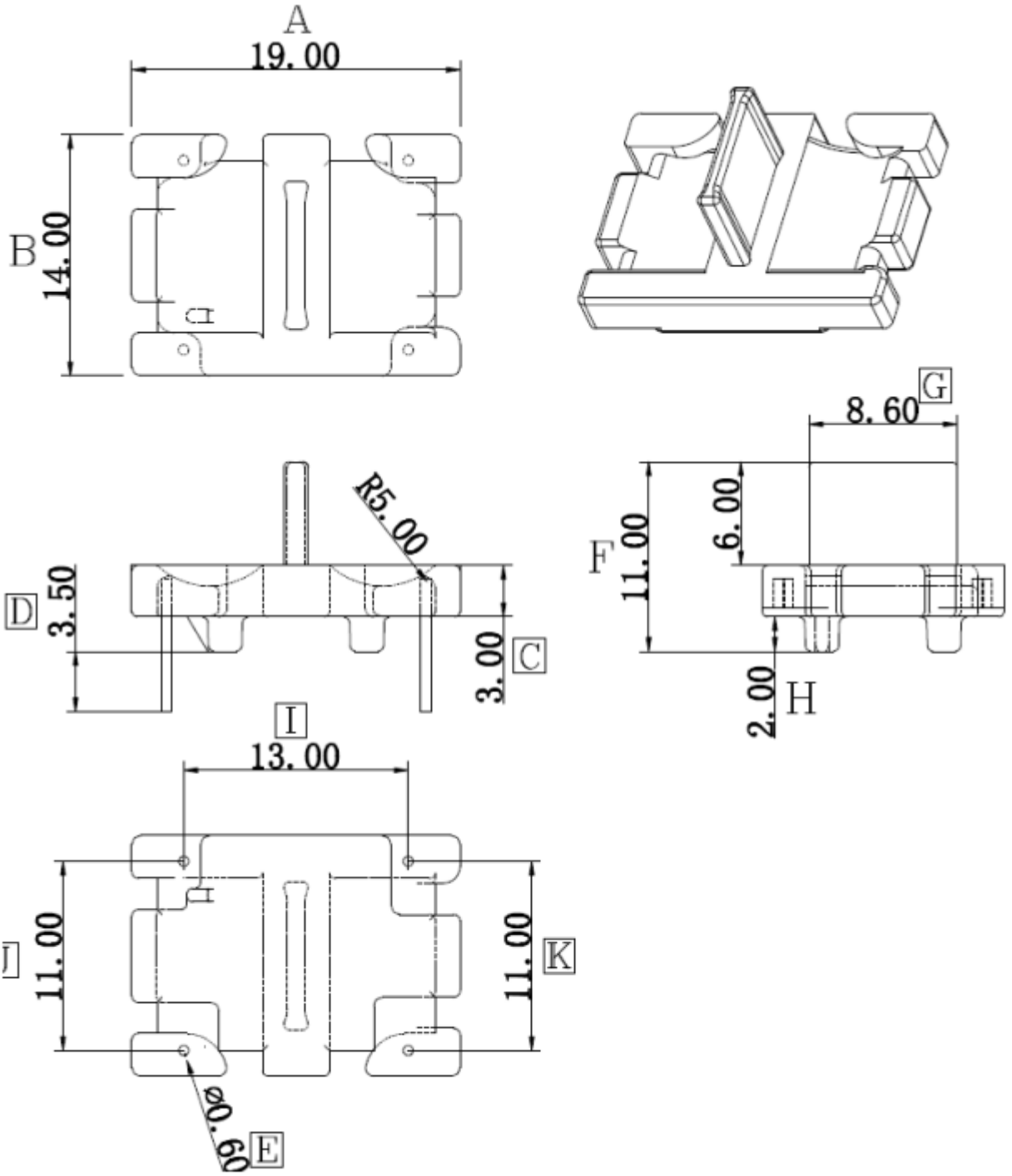

Customer	Qisda	Customer P/N	1J.42068.001	Spec Version	00-4
Supplier	LITEON	Maker P/N	FACK002DP	Component Type	UC14

Form Version: 3.0

● Core Dimension(mm)

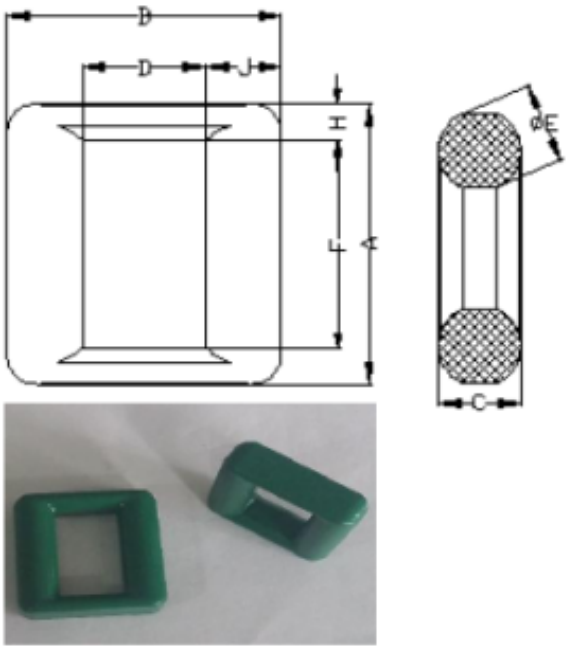

	产品尺寸	涂后尺寸
A	14.0±0.25	14.3±0.3
B	14.5±0.25	14.9±0.3
C	5.7±0.25	6.0+0.2 -0.3
D	5.1±0.25	4.8±0.3
F	9.6±0.2	9.3+0.4 -0.2
H	2.2±0.2	2.4±0.2
J	4.6±0.2	4.9±0.2
ΦE		6.30max

磁路有效参数	
有效磁路常数 Le	36.532
有效截面积 Ae	16.8
有效体积 Ve	613.7
重量 W	4.0g

Customer	Qisda	Customer P/N	1J.42068.001	Spec Version	00-4
Supplier	LITEON	Maker P/N	FACK002DP	Component Type	UC14

Form Version: 3.0

● Winding Specification

➔ Winding List:

No	Winding No.	Terminal	Wire	Turns	Winding Rule
1	N1	1—2	UEWH 0.1x1.0mm	59Ts	REF
2	N2	4—3	UEWH 0.1x1.0mm	59Ts	REF

➔ Schematic:

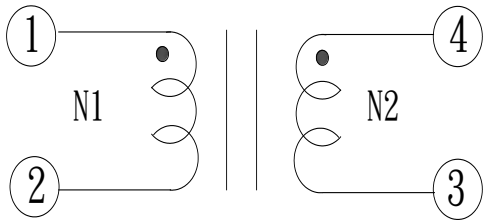

" ● "POLARITY

➔ Winding Order:

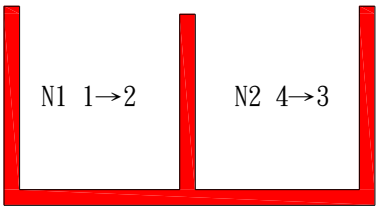

● Electrical Characteristics

Item	Test Terminal	Specification	Test Instrument
Inductance	L(1—2) L(4—3)	20mH MIN 20mH MIN	WK-3620B @1KHz,1V
Q VALUE	PIN(1—2) PIN(4—3)	6.0 MIN	WK-3620B @10KHz,1V
D.C. Resistance @25℃	R(1—2) R(4—3)	300mΩ MAX 300mΩ MAX	CH-502A
Hi-Pot	COIL TO COIL COIL TO CORE	AC 1000V/3mA/1MIN AC 500V/3mA/1MIN	CH-9052
Insulation Resistance	COIL TO CORE COIL TO COIL	DC500V/100MΩ MIN DC500V/100MΩ MIN	
Rated Current	0.8A		
Operation Temp. Range	-20℃~+130℃		
Storage Temp. Range	-20℃~+60℃		

Customer	Qisda	Customer P/N	1J.42068.001	Spec Version	00-4
Supplier	LITEON	Maker P/N	FACK002DP	Component Type	UC14

Form Version: 3.0

Material List

No	Sub Part	Supplier	Description	Type	Flame/ Temp.	UL No.
1	CORE	HENGRUI CO.,LTD.	FERRITE CORE UC14	HR10K	N/A	N/A
2	BOBBIN (BASE) CTI group Ⅲ Thk.0.7 (min.)	CHANG CHUN PLASTICS CO LTD.	PHENOLIC	T375HF	94V-0/ 150℃	E59481
3	WIRE	WELL ASCENT ELECTRIC	POLYURETHANE ENAMELD	SFT-UEWH	180℃	E318511
4	VARNISH	NOROO PAINT & COATINGS CO.,LTD.	POLYESTER	DVB-2085(*) (SEE NOTE1)	130℃	E93947
		QIANG DA ELECTRONICS INDUSTRY CO LTD		DA-700-(*) (SEE NOTE2)	130℃	E347463
5	SOLDER	GUANGZHOU RESEARCH INDUSTRIAL CO.,LTD.	Sn98 Ag1.5 Cu0.5	GKWQ1	N/A	N/A
6	INK	HITACHI CO.,LTD.	BLACK	JP-K33	N/A	N/A

NOTE1: DVB-2085(*)是 UL 認證號,包含 DVB-2085(x)品名.
NOTE2: DA-700-(*)是 UL 認證號,包含 DA-700-3.

Customer	Qisda	Customer P/N	1J.42068.001	Spec Version	00-4
Supplier	LITEON	Maker P/N	FACK002DP	Component Type	UC14

Form Version: 3.0

Package Specification

T-FACK002DP Packing Criterion

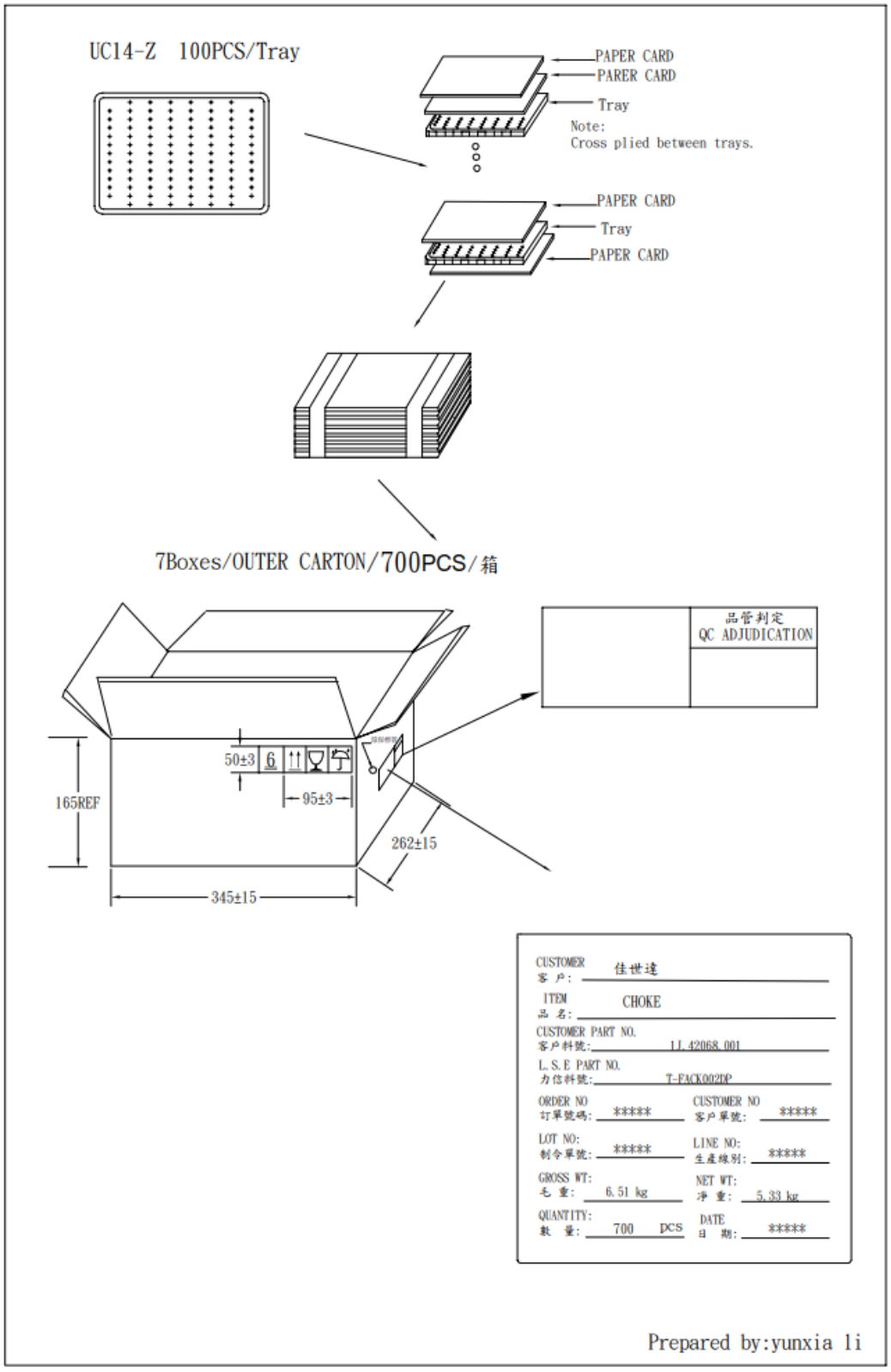

Customer	Qisda	Customer P/N	1J.42068.001	Spec Version	00-4
Supplier	LITEON	Maker P/N	FACK002DP	Component Type	UC14

Form Version: 3.0

● Reliability Criteria (Qisda Version :2.0)

Test item	Test condition (Test Method)	inspection criteria
高溫無負荷壽命測試 (Hi-temp unload life test)	Condition: 85±2℃ Duration: 120 hours 96 Hrs (工厂例行性抽验)	1. 外觀：無腐蝕、裂痕、其他機械損傷線圈鐵芯裝配牢固 2. 電氣特性：在原 SPEC 要求之規格內
低溫無負荷壽命測試 (Low-temp unload life test)	Condition: -25℃ ± 2℃ Duration: 120 hours 96 Hrs (工厂例行性抽验)	1. 外觀：無腐蝕、裂痕、其他機械損傷線圈鐵芯裝配牢固 2. 電氣特性：在原 SPEC 要求之規格內
耐濕性無負荷試驗 (Humidity unload test)	Condition: 65℃ ± 2℃ Humidity: 90 to 95% RH Duration: 120 hours	1. 外觀：無腐蝕、裂痕、其他機械損傷線圈鐵芯裝配牢固 2. 電氣特性：在原 SPEC 要求之規格內
溫度循環試驗 (Thermal cycle test)	Cycle: 25+/-5℃/ 3-5 min --> -25+/-3℃/ 15 min --> 25+/-3℃/ 3-5 min --> 85+/-5℃/ 15 min Times: 100 Cycles 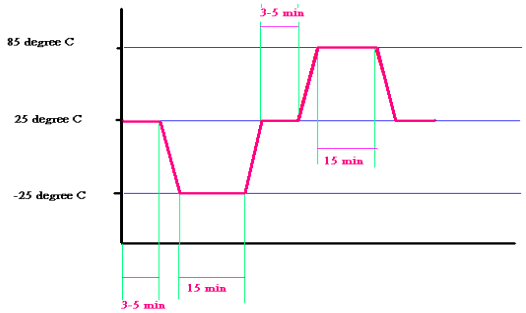	1. 外觀無斷裂,脫落,鬆動而且外觀無任何異常現象. 2. 電氣特性:在原 SPEC 規格內
焊錫耐熱性試驗 (Solder heat-resistance test) IR-Reflow or Wave solder	Pre-heating: 150±10℃ Time: 60 - 120 sec max Temperature: 260±5℃ max Time: 10 sec ±1 sec	1. 外觀：無腐蝕、裂痕，其他機械損傷,不能有焊錫不良,其焊錫面積需達到 95%. 2. 電氣特性：在原 SPEC 要求之規格內
焊錫附著性試驗 (Solderability test)	Temperature: 235±5℃ Time: 5±0.5 sec	1. 外觀：無斷裂、脫落而且外觀無任何異常現象 2. 焊錫面積需達到 95%

Customer	Qisda	Customer P/N	1J.42068.001	Spec Version	00-4
Supplier	LITEON	Maker P/N	FACK002DP	Component Type	UC14

Form Version: 3.0

Test item	Test condition (Test Method)	inspection criteria
冷熱衝擊試驗 (Thermal shock test)	Cycle: -25℃ / 30 min -->100 ℃/ 30 min Times: 100 Cycles 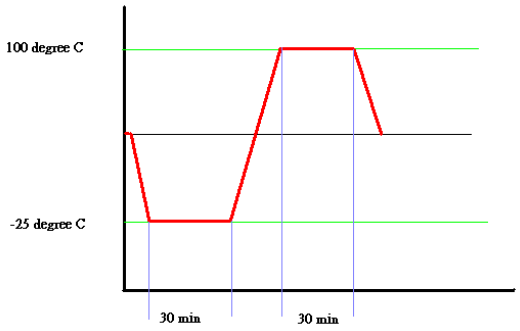	1. Inductance deviation within ±5.0%
振動試驗 (Vibration test)	Frequency:10 Hz --> 55 Hz --> 10Hz (for 1 min.) Time:6 hour Perpendicular directions (X,Y,Z)	1. 外觀:無裂痕,PIN 腳脫落與其他機械損傷. 2. 電性符合 SPEC 要求.
Solder Iron	Temperature: 390+/-10℃ Time: 4-5 sec	1. 外觀：無斷裂、脫落而且外觀無任何異常現象 2. 焊錫面積需達到 95%

Customer	Qisda	Customer P/N	1J.42068.001	Spec Version	00-4
Supplier	LITEON	Maker P/N	FACK002DP	Component Type	UC14

Form Version: 3.0

● Qisda Check List

No	Check Point	Remark	Supplier Confirm (Pass or N/A)
1	2Pin 以上 Choke 類零件需注意防呆		N/A
2	Transformer 的繞組需加註繞法疏繞需注意是否需平均疏繞。走線槽位是否可避免傷到漆包線及是否與 Core 距離太近. 需注明走線方向順時針？逆時針？		Pass
3	Transformer 如果繞線太細（低於 0.04mm）， 外部需包 TAPE。		N/A
4	是否標示研磨 Core 位置(打點)		Pass
5	Transformer 出入線結線：不可超過 BOBBIN stand off Cut off PIN ：需與 BOBBIN stand off 齊平 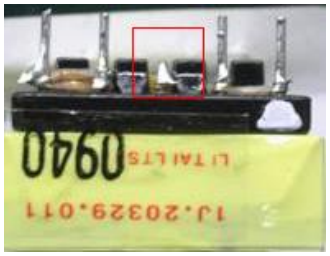		Pass
6	Power Transformer 限定常用 Core 廠商： Others :TDK、TDG、SAMWHA、FERROXCUBE（PHILIPS）、TOKIN、NICERA Projector: TDK、FERROXCUBE（PHILIPS）、TOKIN、NICERA	*非限定 core 廠商勿用	N/A
7	Material List 標註 UL No.		Pass
8	規格書中需注明測試設備（指定測試設備：HP-4284A）。 電感測試條件一般為：40KHz 1V Hi-pot 測試條件一般為：3mA/ 1min	如需 CHEN HWA 量測，則須比較二種設備誤差，將誤差值加入到實際測試值中	N/A
9	使用 Ring choke, 引腳出線處需加 Teflon tube，tube 至少深入至線包不會短路，不得低於 core 底部；底部需加 PCB 板，起固定隔離作用。		N/A
10	Choke 類電感外部加熱縮套管，需保證套管高於線圈		N/A
11	Chock 類電感線徑若≤0.6mm，則不能由銅線直接沾錫作為 PIN 腳，必須加底座		N/A

Customer	Qisda	Customer P/N	1J.42068.001	Spec Version	00-4
Supplier	LITEON	Maker P/N	FACK002DP	Component Type	UC14

Form Version: 3.0

12	所有 Transformer 都要 "真空" 含浸，以防止異音及耐壓不足		**Pass**
13	Transformer 需廠商提供包裝方式，注意每層之間需加隔板，避免零件受擠壓		**Pass**
14	Ring Choke 的測試頻率需定義為 100KHz/1V		**N/A**
15	臥式 ER2828 所用 BOBBIN，需在 BOBBIN 兩側貼 margin tape 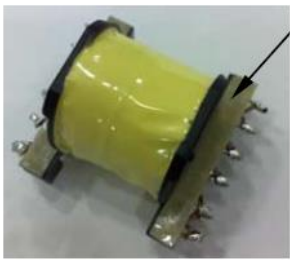		**Pass**
16	Transformer 需在規格書中定義:pin 腳需二次沾錫 (請確認剪腳處是否產生錫裂)		**Pass**
17	一二次側跨接的 power transformer，為保證其與 PCB 表面良好絕緣，要求：二次側需包 2 層膠布，成品外部再包 2 層膠布.具體如下圖 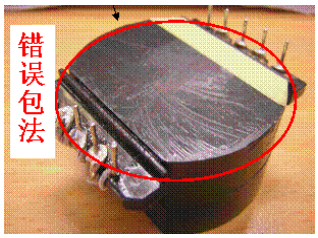 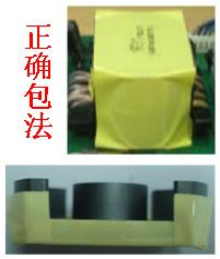		**N/A**

Customer	Qisda	Customer P/N	1J.42068.001	Spec Version	00-4
Supplier	LITEON	Maker P/N	FACK002DP	Component Type	UC14

Form Version: 3.0

Qisda Format History

Date	Version	Change Notice	Owner
2010-12-3	V1.0	Org	
2011-01-3	V2.0	1.Add Qisda Logo 2.Add Power Transformer 限定常用 Core 廠商 (NICERA) 3.Reliability 設為必須符合條件	
2012-04-16	V3.0	1. Add photo for final sample. 2. Add Core dimension drawing. 3. Update material list form with thickness.	Carol.Sung