LI TAI ELECTRONIC ENTERPRISE CO.,LTD

CUSTOMER

鈺緯

SPECIFICATION FOR APPROVAL

CUSTOMER PART NO: _____

LI TAI PART NO: PT-026345

DESCRIPTION: TRANSFORMER

DATE: 2024-09-04

TAIWAN □HEAD OFFICE：東力泰企業有限公司

2F-2, No.16, Jian Ba Road, Chang Ho Dist. , New Taipei City, 23511 Taiwan

新北市中和區建八路 16 號 2 樓之 2

TEL: (02) 8226-3838 FAX: (02) 8226-5522

CHINA □FUQING PLANT：福清景翔電子配件有限公司

Rongqiao Economic and Technological Development Zone, Fuyu Rd., Fuqing, Fujian, China

福建省福清市融僑經濟技術開發區福玉路

TEL: 86-591-85367150 FAX: 86-591-85381525

□SHENZHEN PLANT： 澄萬電子（深圳）有限公司

Area A, 3rd Floor, No. 3, Third Industrial Zone, Xiacun Community, Gongming Street,,Guangming District, 518106, Shenzhen,, China

深圳市光明新區公明辦事處下村社區第三工業區 3 棟 3 樓 A 區.

TEL: 86-755-27730621 FAX: 86-755-27730576

□SUZHOU PLANT：蘇州祥崴電子有限公司

1027-2 Sunwu Road, Xukou Town, Wuhzong District, Suzhou, China

江蘇省蘇州市吳中區胥口鎮孫武路 1027-2 號

TEL: 86-512-66219182 FAX: 86-512-66219183

工程圖改版說明

客戶：	鈺緯	生產分發單位	深圳-澄萬	蘇州-祥崴	福清-景翔
				*	

型式：	LQ3017	客戶料號：		力泰料號:	PT-026345

版次	頁次	原內容	變更內容	日期	備註
A0		ISSUE		2024-08-27	

備註	生產(發行)

SPECIFICATION FOR APPROVAL		CUSTOMER: 鈺緯
LI TAI PART NO. :	REV. :	CUSTOMERPART NO.:
PT-026345	*A0*	
PART NAME :	SPEC. NO. :	ISSUE DATE
TRANSFORMER		*2024-08-27*

CONTENT:

1.Configuration & Dimension

2.Winding Specification

3.Electrical Characteristics

4.Material List

5.Bobbin Dimension

APPROVAL BY	CHECK BY	DRAWING BY

SPECIFICATION FOR APPROVAL		CUSTOMER: 鈺緯
LI TAI PART NO. :	REV. :	CUSTOMERPART NO.:
PT-026345	A0	
PART NAME :	SPEC. NO. :	ISSUE DATE
TRANSFORMER		2024-08-27

1.Configuration & Dimension :

UNIT: m/m

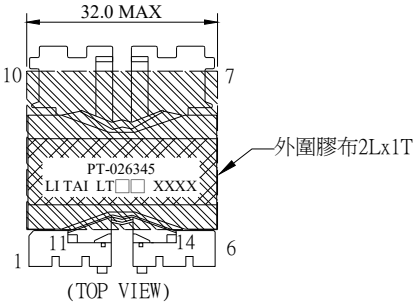

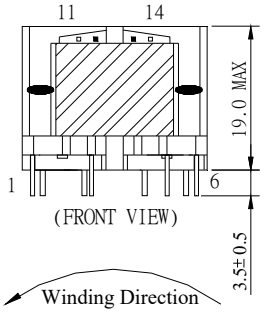

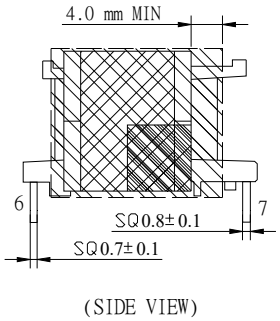

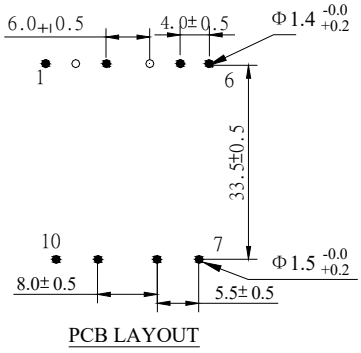

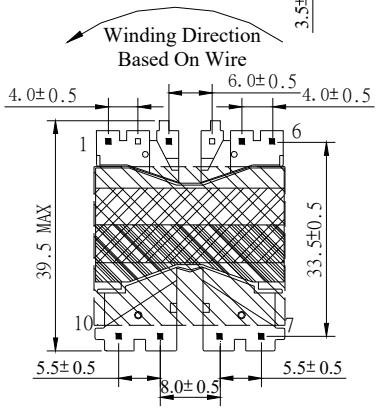

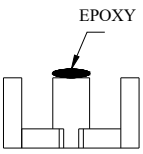

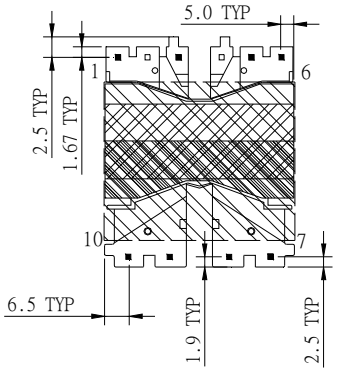

NOTES:

1. MANUFACTURING SITE:(□□□□)
   LI TAI LTFC:Fujian,China
   LI TAI LTSZ:Shenzhen,Guangdong,China
   LI TAI LTSJ:Suzhou,Jiangsu,China
   LOT NO.(XX XX)
   YEAR WEEK
2. CORE 中柱和接面處點膠固定.
3. PIN 1 朝外繞製.
4. PIN 2,4,11,14 CUT OFF.
5. 二次測鐵心需背膠 1L(高溫膠布).

SPECIFICATION FOR APPROVAL		CUSTOMER: 鈺緯
LI TAI PART NO. :	REV. :	CUSTOMERPART NO.:
PT-026345	A0	
PART NAME :	SPEC. NO. :	ISSUE DATE
TRANSFORMER		2024-08-27

2.Winding Specification :

2-1 Schematic :

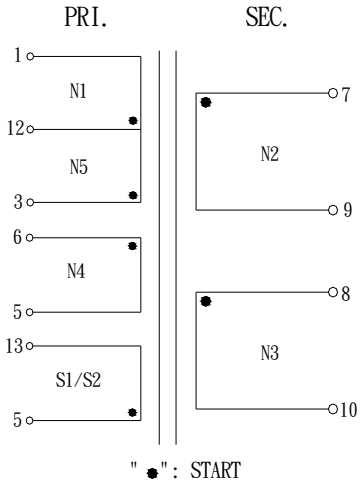

2-2 Winding Order :

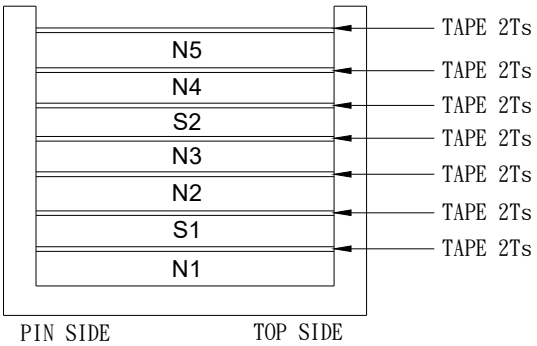

NO.	Winding	Terminal	Wire	Turns	Remark
1	N1	12---1	2UEW φ0.35x1c	20	
2	S1	5---13	2UEW φ0.25x1c	24	
3	N2	7---9	TEX-E φ0.45x2c	5	
4	N3	8---10	TEX-E φ0.45x2c	5	
5	S2	5---13	2UEW φ0.25x1c	24	
6	N4	6---5	2UEW φ0.25x2c	6	
7	N5	3---12	2UEW φ0.35x1c	17	

* N2,N4 由上方起繞,結束線從頂部拉至上方柱子接回 PIN.
* N4 PIN 朝內繞線，由 PIN5 起繞，結束於 PIN6.

3. Electrical Characteristics :

ELECTRICAL CHARACTERISTICS				
NO.	ITEM	TEST TERMINAL	SPECIFICATION	TEST INSTRUMENT
1	INDUCTANCE	L(3---1)	780uH±7%	WK-3260B LCZ METER @40KHz ,1V
2	LEAKAGE INDUCTANCE	Lk(3---1) SEC SHORT	15uH MAX	
3	DC.RESISTANCE	R(3---1)	470mΩ MAX.	CHEN HWA 502 OHM METER @25℃
		R(7---9)	30mΩ MAX.	
		R(8---10)	30mΩ MAX.	
		R(6---5)	95mΩ MAX.	
4	HI-POT TEST	PRI TO SEC	3600VAC/3mA/3SEC	ZENTECH 9072A
		PRI & SEC TO CORE	1800VAC/3mA/3SEC	

SPECIFICATION FOR APPROVAL		CUSTOMER: 鈺緯
LI TAI PART NO. :	REV. :	CUSTOMERPART NO.:
PT-026345	A0	
PART NAME :	SPEC. NO. :	ISSUE DATE
TRANSFORMER		2024-08-27

4. Material List :

NO	SUB PART	RAW MATERIAL				
		MANUFACTURER	DESCRIPTION	TYPE	FLAME/ TEMP	UL NO.
1	CORE	TONG DA	FERRITE CORE LQ3017	TD47	N/A	N/A
		MAOXIANG OR EQU		MP4C		
2	BOBBIN	SUMITOMO BAKELITE CO.,LTD	PHENOLIC	PM-9823	150℃	E41429
3	WIRE	PACIFIC ELECTRIC WIRE & CABLE (SHENZHEN) CO LTD	POLYURETHANE	UEW/U@ (ANSI MW-75C)	130℃	E201757
4	TRIPLE WIRE	FURUKAWA ELECTRIC CO.,LTD	TRIPLE INSULATION WIRE	TEX-E	130℃	E206440
5	TAPE	JINGJIANG YAHUA PRESSURE SENSITIVE GLUE CO LTD Dielectric breakdown 5.0kv THICKNESS 0.060mm±0.01mm	POLYETHYLENE TEREPHTHALATE	CT* (c)(g)	130℃	E165111
			POLYIMIDE	PF* (d)(g)	180℃	
		SYMBIO INC (Dielectric breakdown 5.0kv THICKNESS 0.055mm±0.005mm	POLYETHYLENE TEREPHTHALATE	NO.35660(a)	130℃	E50292
			POLYETHYLENE	KA200	200℃	
6	EPOXY	DONG GUAN SHI PAI HUA CHUANG MATERIAL FTY		H907-HF	130℃	E304477
7	VARNISH	SUZHOU TAIHU ELECTRIC ADVANCED MATERIAL CO LTD	POLYESTER	T-4260(a)	130℃	E228349

SPECIFICATION FOR APPROVAL		CUSTOMER: 鈺緯
LI TAI PART NO. :	REV. :	CUSTOMERPART NO.:
PT-026345	A0	
PART NAME :	SPEC. NO. :	ISSUE DATE
TRANSFORMER		2024-08-27

5. Bobbin Dimension

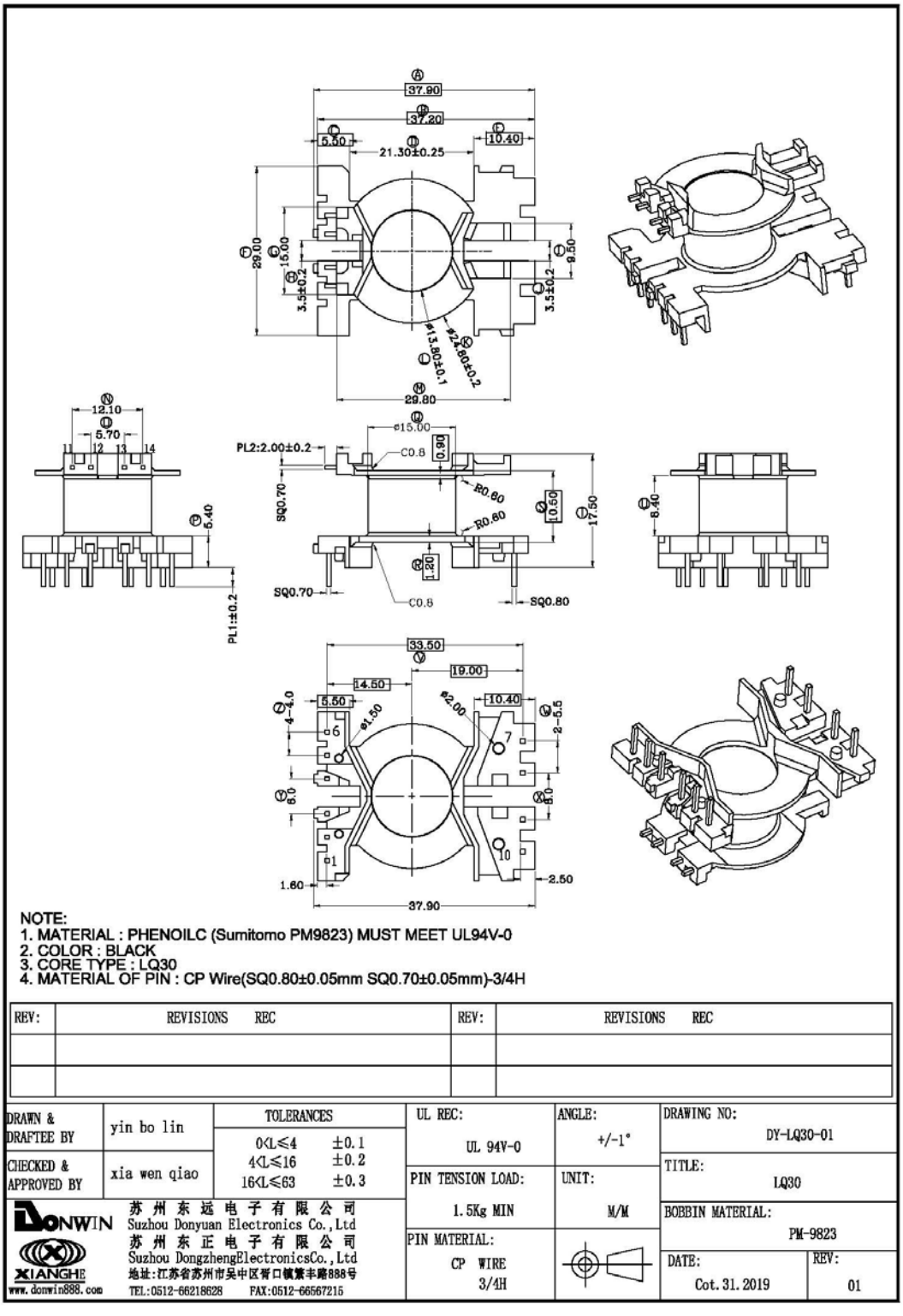

NOTE:
1. MATERIAL : PHENOILC (Sumitomo PM9823) MUST MEET UL94V-0
2. COLOR : BLACK
3. CORE TYPE : LQ30
4. MATERIAL OF PIN : CP Wire(SQ0.80±0.05mm SQ0.70±0.05mm)-3/4H

REV:	REVISIONS REC	REV:	REVISIONS REC

DRAWN & DRAFTEE BY	yin bo lin	TOLERANCES	UL REC:	ANGLE:	DRAWING NO:
CHECKED & APPROVED BY	xia wen qiao	0<L≤4 ±0.1 4<L≤16 ±0.2 16<L≤63 ±0.3	UL 94V-0	+/-1°	DY-LQ30-01
			PIN TENSION LOAD: 1.5Kg MIN	UNIT: M/M	TITLE: LQ30
			PIN MATERIAL: CP WIRE 3/4H		BOBBIN MATERIAL: PM-9823
					DATE: Cot.31.2019 / REV: 01

DONWIN XIANGHE www.donwin888.com
苏州东远电子有限公司 Suzhou Donyuan Electronics Co.,Ltd
苏州东正电子有限公司 Suzhou DongzhengElectronicsCo.,Ltd
地址:江苏省苏州市吴中区胥口镇繁丰路888号
TEL:0512-66218628 FAX:0512-66567215