REV.	DATE	DESCRIPTION	BY	APVD

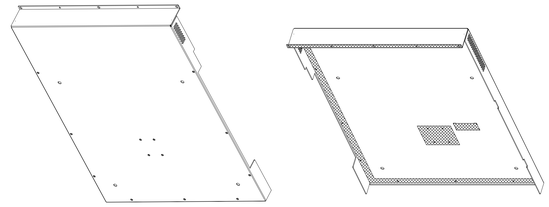

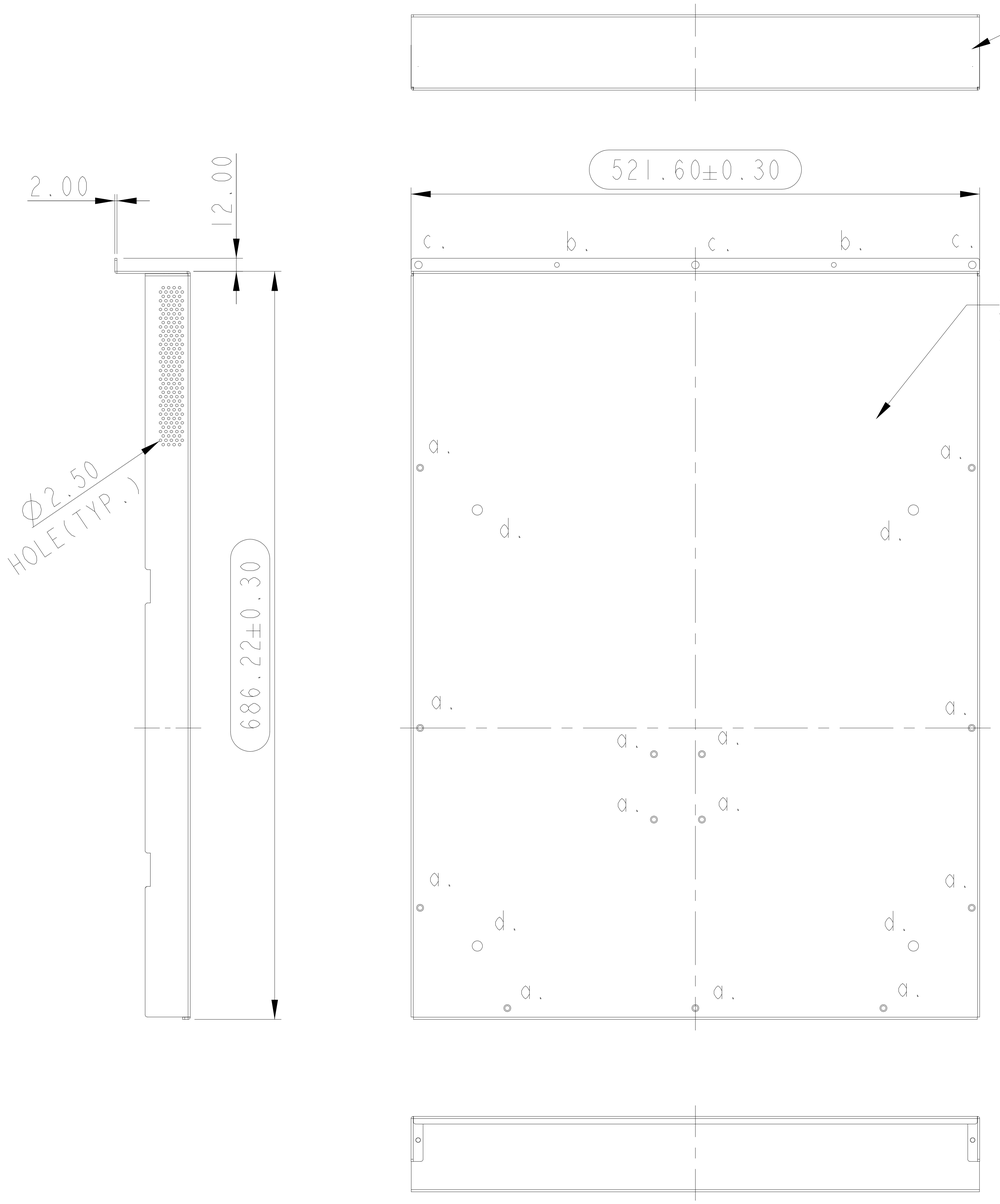

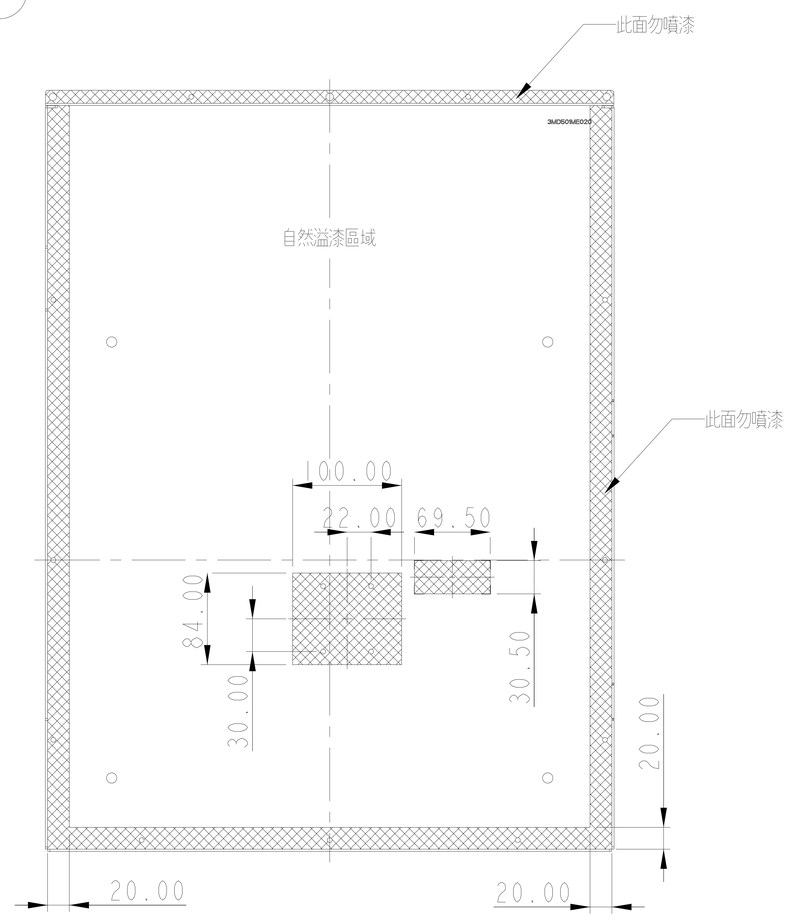

NOTES:

1. ▨ PAINTING PROHIBITED AREA.
2. MATERIAL: A5052, t=2.0mm.
3. a.: ∅4.50 CONTERSINK HOLE(CONTERSINK ANGLE 120°) (x13).
4. b.: ∅4.50 THROUGH HOLE (x2).
5. c.: ∅7.0 THROUGH HOLE (x3).
6. d.: ∅9.5 THROUGH HOLE (x4).
7. ALL FLAT HEAD SCREWS(110°) MUST SINK COMPLETELY DO NOT OUTCROP.
8. IQC INSPECTION DOCUMEMNT NO.: QWI-023.

RANGE OF DIMENSION	TOLERANCE CLASS DESIGNATION f	V m	V c	THIRD ANGLE PROJECTION	UNITS: mm	SCALE: 1/2	SHEET: 1 OF 1	MODEL NO.: SC65812
					MATERIAL: A5052, t=2.0		TREATMENT: HEAT PAINT(LIQUID) RAL9005	
UP TO 30	±0.10	±0.20	±0.50	DSGD by Ferris Tsai	2020-05-07	PART NAME: REAR COVER		
ABOVE 30~120	±0.15	±0.30	±0.80	CHK by -	-			
ABOVE 120~315	±0.20	±0.50	±1.20	APVD by Laslie	2020.05.07 18:17:13 +08'00'	PART NO.: 3MD501ME020		REV. 0
ABOVE 315~1000	±0.30	±0.80	±2.00	APVD NO.: M3233	3D FILE NAME: SC65812_REAR_COVER	DIVA Laboratories ,Ltd.		
ANGLE ±1° (±1.75/100)								