REV.	DATE	DESCRIPTION	BY	APVD

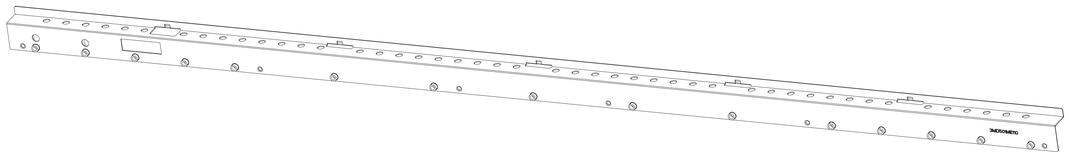

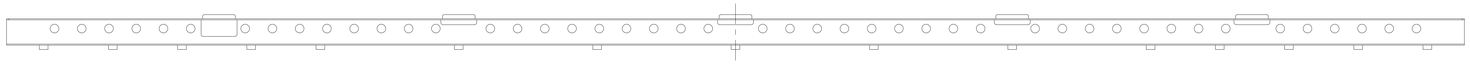

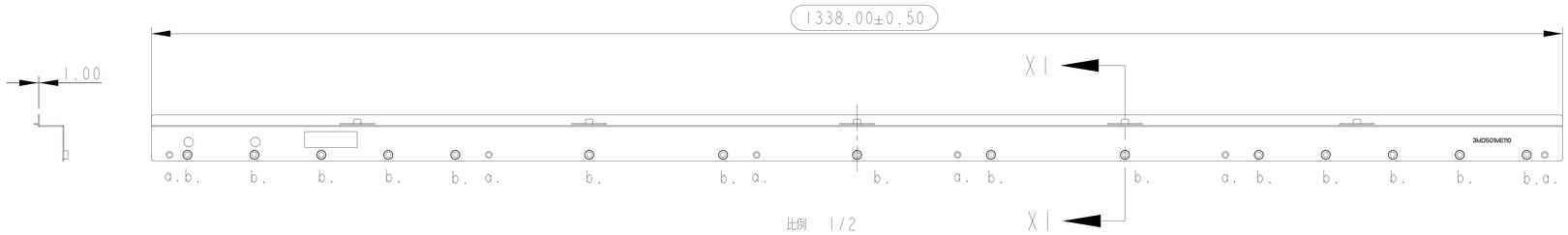

比例 1/2

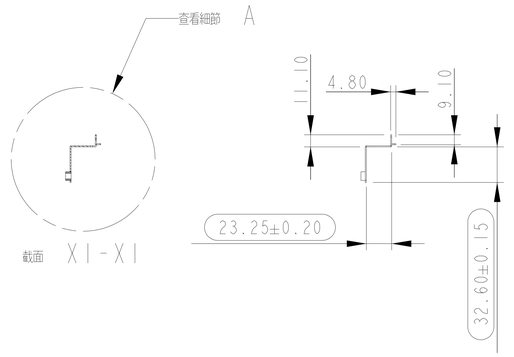

截面 X1-X1

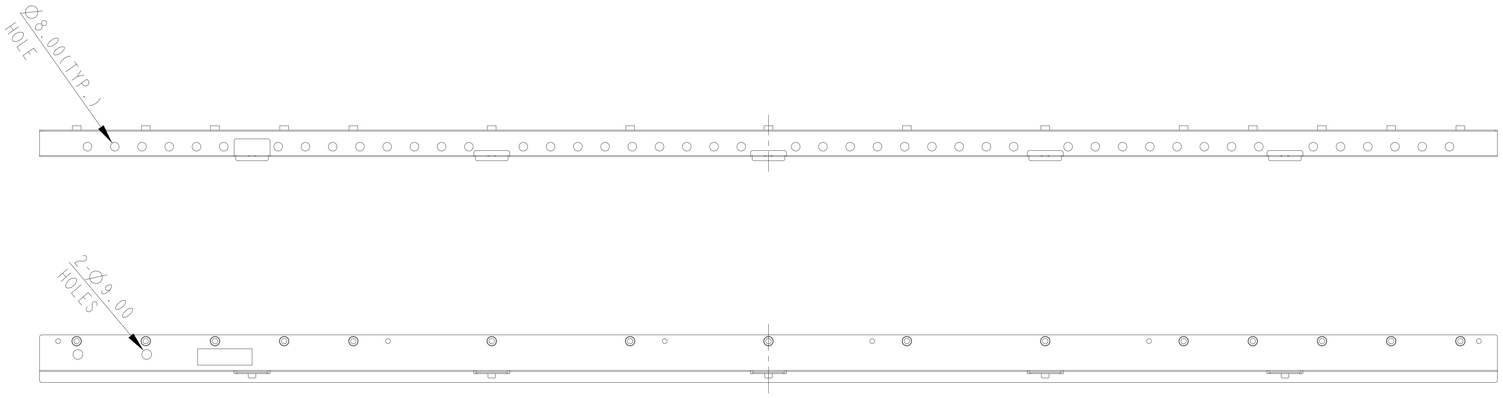

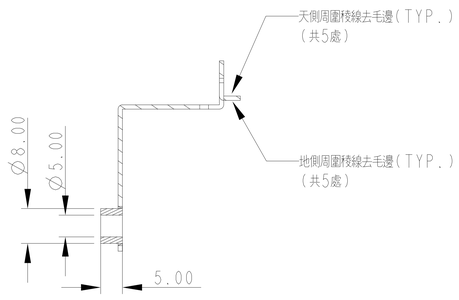

細節 A
比例 2/1

NOTES:
1. MATERIAL: SECC, t=1.0mm.
2. a.: Ø4.50 CONTERSINK HOLE(CONTERSINK ANGLE 120°)(x6).
3. b.: Ø8.0 SO STANDOFF(x 15).
4. ALL FLAT HEAD SCREWS(110°) MUST SINK COMPLETELY DO NOT OUTCROP.
5. IQC INSPECTION DOCUMEMNT NO.: QWI-014.

RANGE OF DIMENSION	TOLERANCE CLASS DESIGNATION f	V m	V c	THIRD ANGLE PROJECTION	UNITS: mm	SCALE: 1/2	SHEET: 1 OF 1	MODEL NO.: SC65812
					MATERIAL: SECC, t=1.0	TREATMENT: DEGREASE		
UP TO 30	±0.10	±0.20	±0.50	DSGD by Ferris Tsai	2020-05-07	PART NAME: GLASS BOTTOM BRACKET		
ABOVE 30~120	±0.15	±0.30	±0.80	CHK by -	-			
ABOVE 120~315	±0.20	±0.50	±1.20	APVD by Laslie	2020.05.07 17:43:32 +08'00'	PART NO.: 3MD501ME110		REV. 0
ABOVE 315~1000	±0.30	±0.80	±2.00	APVD NO.: M3242	3D FILE NAME: SC65812_ASM-GLASS-BOTTOM.BKT	DIVA Laboratories, Ltd.		
ANGLE ±1° (±1.75/100)								