REV.	DESCRIPTION	DATE
A	New Drawing	2024/10/16

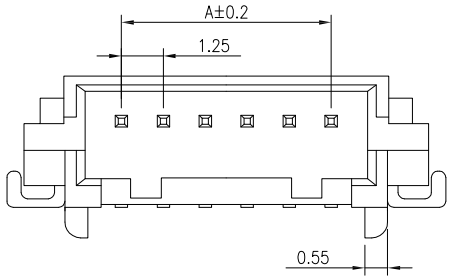

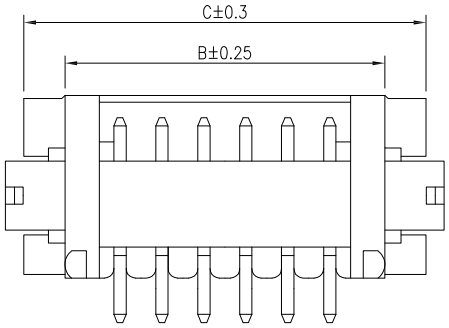

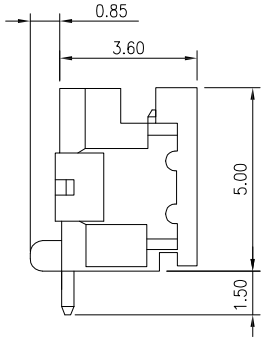

Circuit No.	Dimensions A	B	C
02P	1.25	4.15	6.25
03P	2.50	5.40	7.50
04P	3.75	6.65	8.75
05P	5.00	7.90	10.00
06P	6.25	9.15	11.25
07P	7.50	10.40	12.50
08P	8.75	11.65	13.75
09P	10.00	12.90	15.00
10P	11.25	14.15	16.25
11P	12.50	15.40	17.50
12P	13.75	16.65	18.75
13P	15.00	17.90	20.00
14P	16.25	19.15	21.25
15P	17.50	20.40	22.50

SPECIFICATIONS

Current Rating: 1A AC,DC
Voltage Rating: 150V AC,DC
Temperature Range: −25°C ~ +85°C
Contact Resistance: 30mΩ Max.
Insulation Resistance: 500MΩ Min.
Withstanding Voltage: 500V AC/minute
Pin Material: Brass/Gold−flash
Solder Tabs: Phosphor Bronze/Gold−flash
Material: Nylon 6T,UL94V−0
Color: Natural

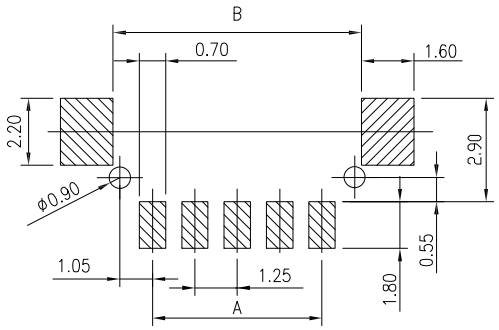

P.C.B LAYOUT

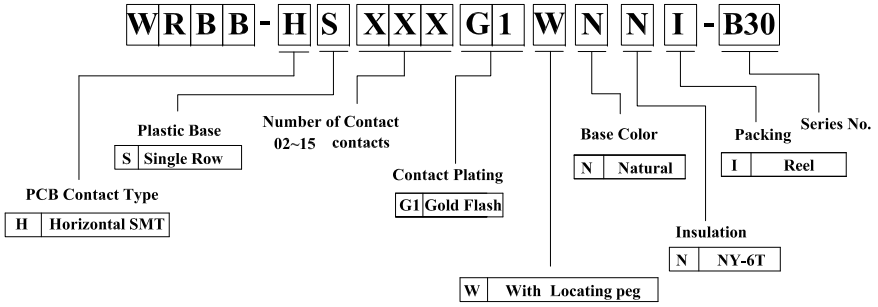

RoHS compliant

竣豪電子股份有限公司 **Superior Tech Co., Ltd.**	General Tolerance	TITLE	WAFER PH1.25 臥式 SMT,NY-6T料,帶柱
	X. ± 0.5	DRAWN Jacky	DATE 10-16-24' / NO. D076
	.X ± 0.3	CHECK Tom	DATE 10-16-24' / PART NO. WRBB-HSXXXG1WNNI-B30
	.XX ± 0.2	APPROVED Tom	DATE 10-16-24' / CUSTOMER NO.
	.XXX ± 0.1		
	角度 ± 5°		
REV. A / UNIT mm / SCALE 1:1			