( ) Preliminary Specification
(V) Final Specification

Module	**19.0” Color TFT-LCD**
Model Name	**M190ETN01.0 (ES 8.0 from 00E)** 3TFTLCDJ04B(T0161)

Customer	**Date**	**Approved by**	**Date**
		PY Cheng	Jan 15, 2021
Approved by		**Prepared by**	**Date**
設計驗證 工程課 2024-10-01 發行		***Venus chen***	Jan 15, 2021
Note: This Specification is subject to change without notice.		AU Optronics corporation	

AUO Confidential for Acmepoint internal Use Only

Contents

1 Handling Precautions 4
2 General Description 5
2.1 Display Characteristics 5
2.2 Absolute Maximum Rating of Environment 7
2.3 Optical Characteristics 8
2.4 Mechanical Characteristics 11
3 TFT-LCD Module 12
3.1 Block Diagram 12
3.2 Interface Connection 12
3.2.1 Connector Type 12
3.2.2 Connector Pin Assignment 13
3.3 Electrical Characteristics 15
3.3.1 Absolute Maximum Rating 15
3.3.2 Recommended Operating Condition 15
3.4 Signal Characteristics 16
3.4.1 LCD Pixel Format 16
3.4.2 LVDS Data Format 16
3.4.3 Color versus Input Data 17
3.4.4 LVDS Specification 18
3.4.5 Input Timing Specification 20
3.4.6 Input Timing Diagram 21
3.5 Power ON/OFF Sequence 22
4 Backlight Unit 22
4.1 Block Diagram 23
4.2 Interface Connection 24
4.2.1 Connector Type 24
4.2.2 Connector Pin Assignment 26
4.3 Electrical Characteristics 27
4.3.1 Absolute Maximum Rating 27
4.3.2 Recommended Operating Condition 27
5 Reliability Test 29
6 Shipping Label 30
7 Mechanical Characteristics 31
8 Packing Specification 32
8.1 Packing Flow 32
8.2 Pallet and shipment information 33

AUO Confidential for Acmepoint internal Use Only

Record of Revision

Version	Date	Page	Old description	New Description	Remark
0.0	2019/7/3	All	First version for ES 8.0		
1.0	2019/11/12	All		Final verison	
1.1	2021/1/15	29	Label Change 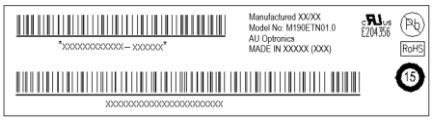	Add new "Cd logo" 	

AUO Confidential for Acmepoint internal use Only

1 Handling Precautions

1) Since front polarizer is easily damaged, pay attention not to scratch it.
2) Be sure to turn off power supply when inserting or disconnecting from input connector.
3) Wipe off water drop immediately. Long contact with water may cause discoloration or spots.
4) When the panel surface is soiled, wipe it with absorbent cotton or other soft cloth.
5) Since the panel is made of glass, it may break or crack if dropped or bumped on hard surface.
6) Since CMOS LSI is used in this module, take care of static electricity and insure human earth when handling.
7) Do not open or modify the Module Assembly.
8) Do not press the reflector sheet at the back of the module to any directions.
9) In case a TFT-LCD Module has to be put back into the packing container slot after once it was taken out from the container, do not press the center of the LED lightbar edge. Otherwise the TFT-LCD Module may be damaged.
10) Insert or pull out the interface connector, be sure not to rotate nor tilt it of the TFT-LCD Module.
11) Do not twist nor bend the TFT -LCD Module even momentary. It should be taken into consideration that no bending/twisting forces are applied to the TFT-LCD Module from outside. Otherwise the TFT-LCD Module may be damaged.
12) Please avoid touching COF position while you are doing mechanical design.
13) When storing modules as spares for a long time, the following precaution is necessary:
Store them in a dark place. Do not expose the module to sunlight or fluorescent light. Keep the temperature between 5℃ and 35℃ at normal humidity.
14) When this reverse-type model(PCBA on bottom side) is used as forward-type model(PCBA on top side) , AUO can not guarantee any defects of LCM .
15) When this reverse-type model(PCBA on bottom side) is used as forward-type model(PCBA on top side) , AUO can not guarantee any defects of LCM.

AUO Confidential for Agreement Internal Use Only

2 General Description

This specification applies to the 19 inch SXGA Color a-Si TFT-LCD Module M190ETN01.0. The display supports the SXGA -1280(H) x 1024(V) screen format and 16.7M colors (8bits RGB data input). The input interface is Dual channel LVDS and this module doesn't contain an driver board for backlight.

2.1 Display Characteristics

The following items are characteristics summary on the table under 25℃ condition:

ITEMS	Unit	SPECIFICATIONS
Screen Diagonal	[mm]	482.6 (19.0")
Active Area	[mm]	376.32 (H) x 301.056 (V)
Pixels H x V	-	1280(x3) x 1024
Pixel Pitch	[um]	294 (per one triad) ×294
Pixel Arrangement	-	R.G.B. Vertical Stripe
Display Mode	-	TN Mode, Normally White
White Luminance (Center)	[cd/m^2]	250 (Typ.) @ 50.0mA
Contrast Ratio	-	1000 (Typ.)
Response Time	[msec]	5 (Typ., on/off)
Power Consumption (LCD Module + Backligh unit)	[Watt]	8.8 (Typ.) LCD module : PDD (Typ.)=2.7 @ Black pattern,Fv=60Hz Backlight unit : P_{BLU} (Typ.) =6.1
Weight	[Grams]	1700
Outline Dimension	[mm]	396(H) × 324(V) × 10.9(D) Typ.
Electrical Interface	-	Dual channel LVDS 8bits RGB data input
Support Color	-	16.7M colors
Surface Treatment	-	Anti-glare type,AG25%, Hardness 3H
Temperature Range Operating Storage (Shipping)	 [°C] [°C]	 0 to +50 -20 to +60
RoHS Compliance	-	RoHS Compliance
TCO Compliance	-	TCO 7.0 Compliance

Note 2-1: The following shows the figure of pixel arrangement

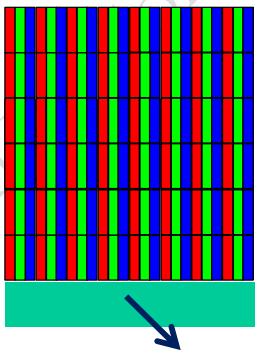

AUO Confidential for Compoint Internal Use Only

AUO Confidential for Acmepoint internal Use Only

2.2 Absolute Maximum Rating of Environment

Permanent damage may occur if exceeding the following maximum rating.

Symbol	Description	Min.	Max.	Unit	Remark
TOP	Operating Temperature	0	+50	[ºC]	***Note 2-1***
TGS	Glass surface temperature (operation)	0	+65	[ºC]	***Note 2-1*** *Function judged only*
HOP	Operation Humidity	5	90	[%RH]	***Note 2-1***
TST	Storage Temperature	-20	+60	[ºC]	
HST	Storage Humidity	5	90	[%RH]	

Note 2-1: Temperature and relative humidity range are shown as the below figure.

1. 90% RH Max (Ta ≦39℃)
2. Max wet-bulb temperature at 39℃ or less. (Ta ≦39℃)
3. No condensation

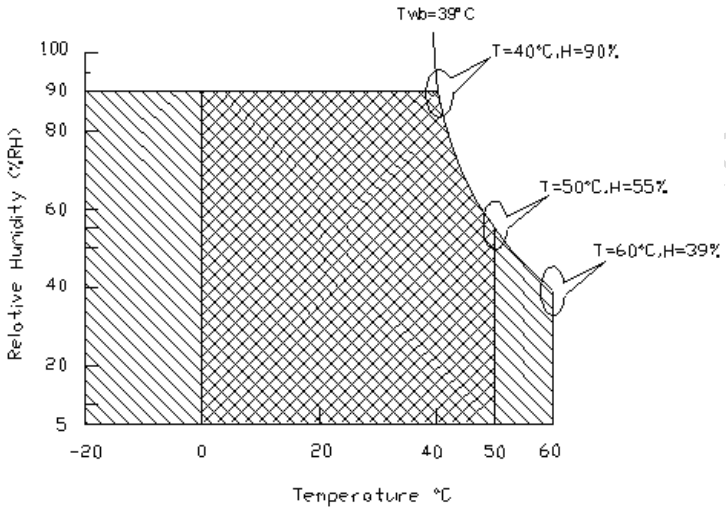

Operating Range  Storage Range 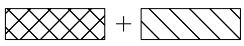

AUO Confidential - Internal Use Only

2.3 Optical Characteristics

The optical characteristics are measured on the following test condition.

Test Condition:

1. Equipment setup: Please refer to ***Note 2-3***.
2. Panel Lighting time: 30 minutes
3. VDD=5.0V, Fv=60Hz,Is=50mA,Ta=25℃

Symbol	Description		Min.	Typ.	Max.	Unit	Remark
L_w	White Luminance (Center of screen)		200	250	-	[cd/m2]	***Note 2-3*** *By SR-3*
L_{uni}	Luminance Uniformity (9 points)		75	80	-	[%]	***Note 2-4*** *By SR-3*
CR	Contrast Ratio (Center of screen)		600	1000	-	-	***Note 2-5*** *By SR-3*
θ_R	Horizontal Viewing Angle (CR=10)	Right	75	85	-	[degree]	***Note 2-6*** *By SR-3*
θ_L		Left	75	85	-		
Φ_H	Vertical Viewing Angle (CR=10)	Up	70	80	-		
Φ_L		Down	70	80	-		
θ_R	Horizontal Viewing Angle (CR=5)	Right	75	88	-		
θ_L		Left	75	88	-		
Φ_H	Vertical Viewing Angle (CR=5)	Up	70	85	-		
Φ_L		Down	70	85	-		
T_R	Response Time	Rising Time	-	3.6	5.7	[msec]	***Note 2-7*** *By TRD-100*
T_F		Falling Time	-	1.4	2.3		
-		Rising + Falling	-	5	8		
R_x	Color Coordinates (CIE 1931)	Red x	0.617	0.647	0.677	-	*By SR-3*
R_y		Red y	0.311	0.341	0.371		
G_x		Green x	0.296	0.326	0.356		
G_y		Green y	0.596	0.626	0.656		
B_x		Blue x	0.122	0.152	0.182		
B_y		Blue y	0.025	0.055	0.085		
W_x		White x	0.283	0.313	0.343		
W_y		White y	0.299	0.329	0.359		
NTSC				72		%	*By SR-3*

Note 2-3: Equipment setup :

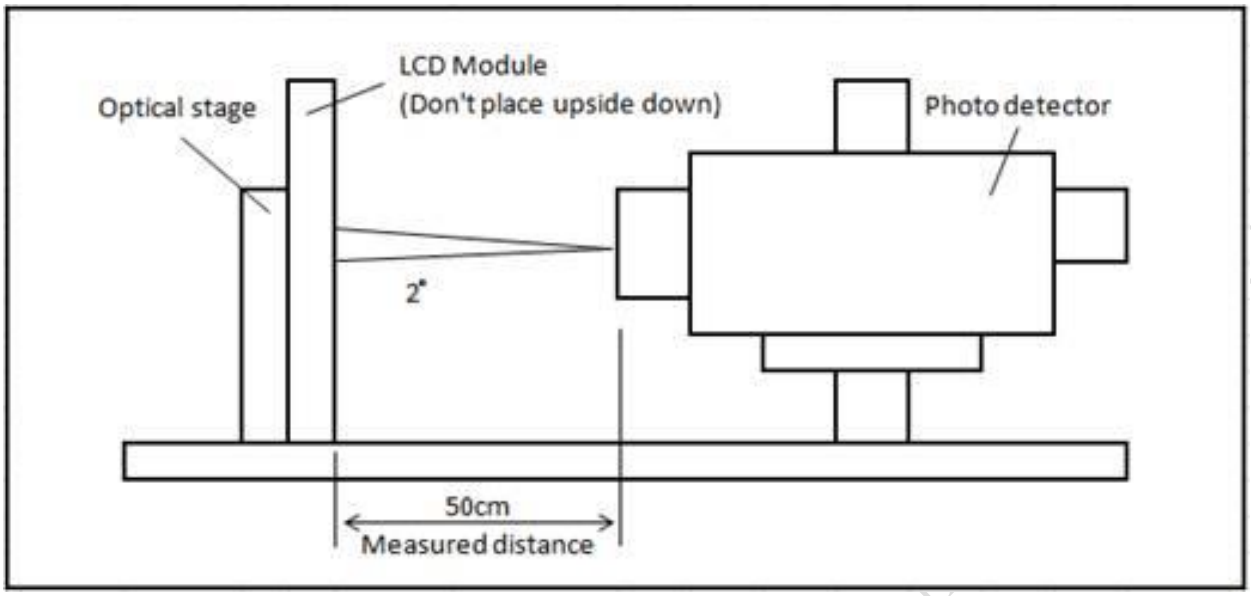

Note 2-4: Luminance Uniformity Measurement

Definition:

$$\text{Luminance Uniformity} = \frac{\text{Minimum Luminance of 9 Points (P1 ~ P9)}}{\text{Maximum Luminance of 9 Points (P1 ~ P9)}}$$

a.Test pattern: White Pattern

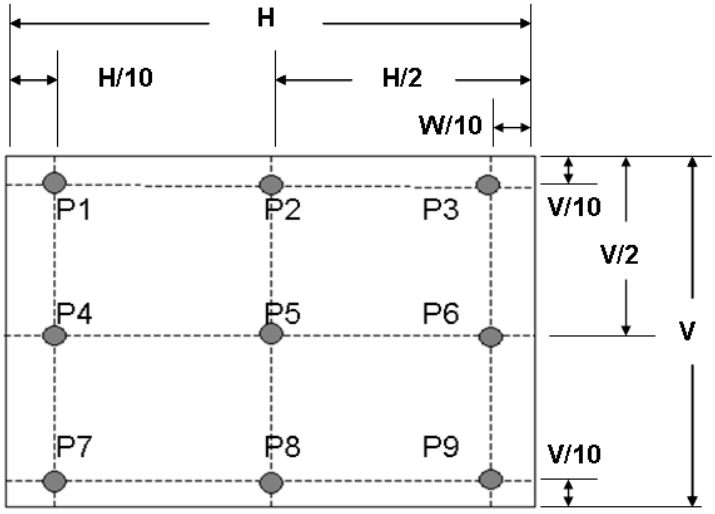

AUO Confidential for Compoint Use Only

Note 2-5: Contrast Ratio Measurement

Definition:

$$\text{Contrast Ratio} = \frac{\text{Luminance of White pattern}}{\text{Luminance of Black pattern}}$$

a. Measured position: Center of screen (P5) & perpendicular to the screen (θ=Φ=0°)

Note 2-6: Viewing angle measurement

Definition: The angle at which the contrast ratio is greater than 10 & 5 .

a. Horizontal view angle: Divide to left & right (θ_L & θ_R)
Vertical view angle: Divide to up & down (Φ_H &Φ_L)

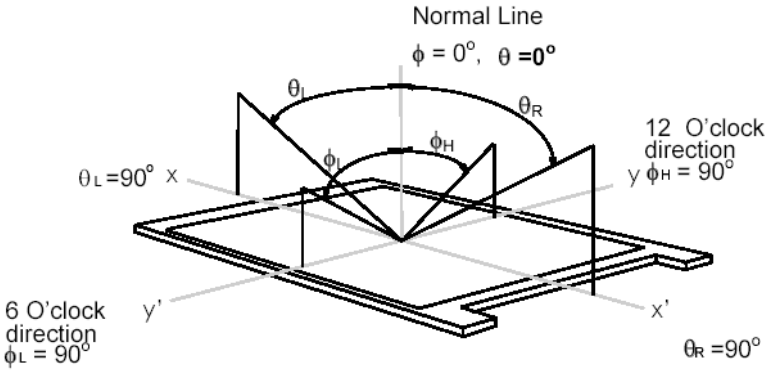

Note 2-7: Response time measurement

The output signals of photo detector are measured when the input signals are changed from "Black" to "White" (rising time, T_R), and from "White" to "Black" (falling time, T_F), respectively. The response time is interval between the 10% and 90% of optical response. (*Black & White color definition: Please refer section 3.4.3)*

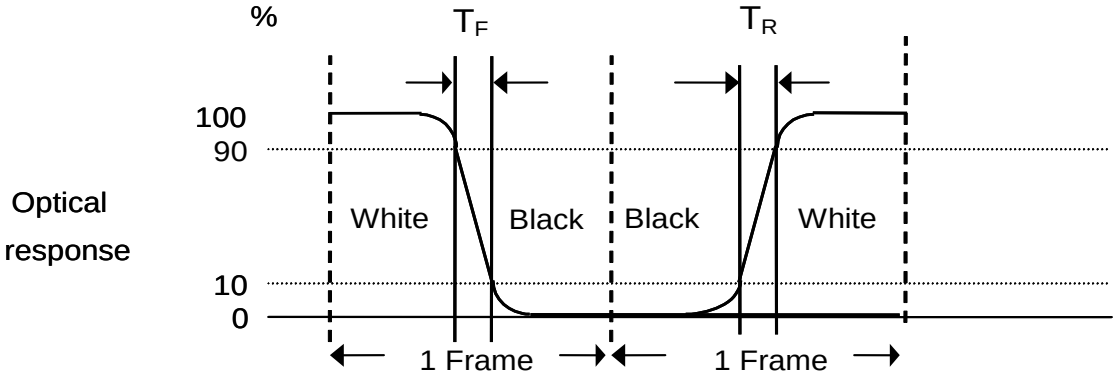

2.4 Mechanical Characteristics

Symbol	Description	Min.	Max.	Unit	Remark
P_{bc}	Backside Compression	2.5	-	[Kgf]	***Note 2-8***

Note 2-8: Test Method:

The point is at a distance from right-downside 25mm x 25mm defined as the Start Point of Measure Points, and the point is at a distance 25mm from left-side & around 10mm from PCB defined as the End Point.

Align 50mm x 50mm block from Start Point on the Bezel Back, and the corners of each block are Measure Points.

If the distance from the last block to each side of the End Point ≧ 25mm, add other blocks to make sure that most area of Bezel Back can be measured.

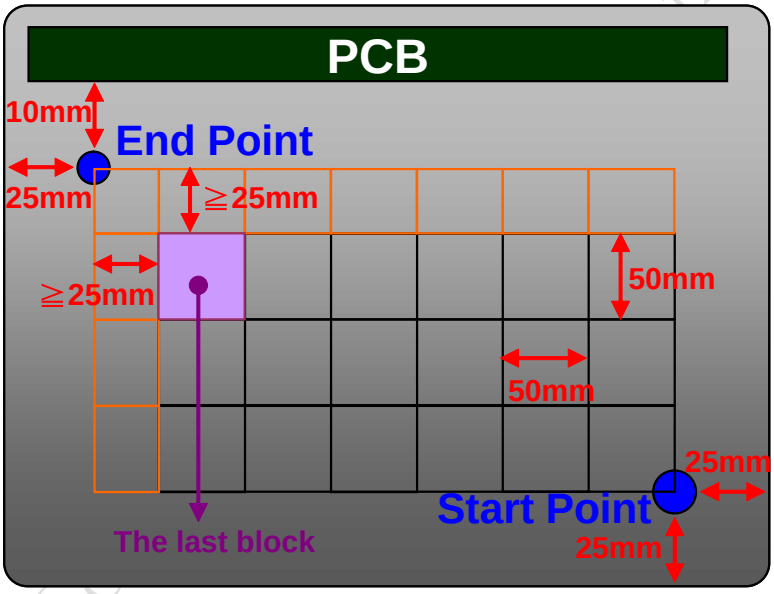

Note 2-9: Evaluation test and mass production inspection shall be applied with LED current Is @ HDR off condition if there is not specified condition.

AUO Confidential Internal Use Only

3 TFT-LCD Module

3.1 Block Diagram

The following shows the block diagram of the 19.0 inch Color TFT-LCD Module.

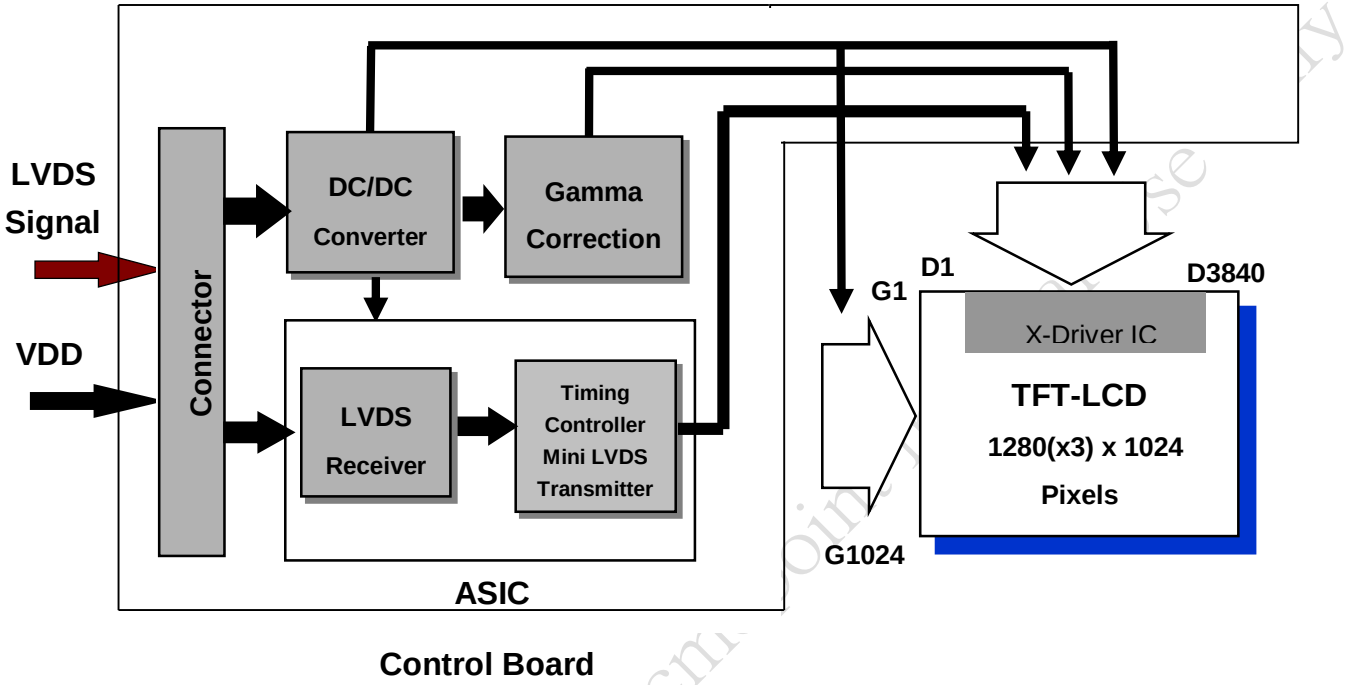

3.2 Interface Connection

3.2.1 Connector Type

TFT-LCD Connector	Manufacturer	P-TWO	STM
	Part Number	187034-3009	MSBKT2407P30HB
Mating Connector	Manufacturer	JAE or Compatible	
	Part Number	FI-X30HL (Locked Type)	

AUO Confidential for Acm... Use Only

3.2.2 Connector Pin Assignment

PIN #	Symbol	Description	Remark
1	RxOIN0-	Negative LVDS differential data input (Odd data)	
2	RxOIN0+	Positive LVDS differential data input (Odd data)	
3	RxOIN1-	Negative LVDS differential data input (Odd data)	
4	RxOIN1+	Positive LVDS differential data input (Odd data)	
5	RxOIN2-	Negative LVDS differential data input (Odd data)	
6	RxOIN2+	Positive LVDS differential data input (Odd data)	
7	GND	Power Ground	
8	RxOCLKIN-	Negative LVDS differential clock input (Odd clock)	
9	RxOCLKIN+	Positive LVDS differential clock input (Odd clock)	
10	RxOIN3-	Negative LVDS differential data input (Odd data)	
11	RxOIN3+	Positive LVDS differential data input (Odd data)	
12	RxEIN0-	Negative LVDS differential data input (Even data)	
13	RxEIN0+	Positive LVDS differential data input (Even data)	
14	GND	Power Ground	
15	RxEIN1-	Positive LVDS differential data input (Even data)	
16	RxEIN1+	Negative LVDS differential data input (Even data)	
17	GND	Power Ground	
18	RxEIN2-	Negative LVDS differential data input (Even data)	
19	RxEIN2+	Positive LVDS differential data input (Even data)	
20	RxECLKIN-	Negative LVDS differential clock input (Even clock)	
21	RxECLKIN+	Positive LVDS differential clock input (Even clock)	
22	RxEIN3-	Negative LVDS differential data input (Even data)	
23	RxEIN3+	Positive LVDS differential data input (Even data)	
24	GND	Power Ground	
25	GND	NC & Power Ground	
26	NC	No connection (for AUO test)	
27	NC	No connection (for AUO test)	
28	POWER	Power +5V	
29	POWER	Power +5V	
30	POWER	Power +5V	

AUO Confidential for Authorized Internal Use Only

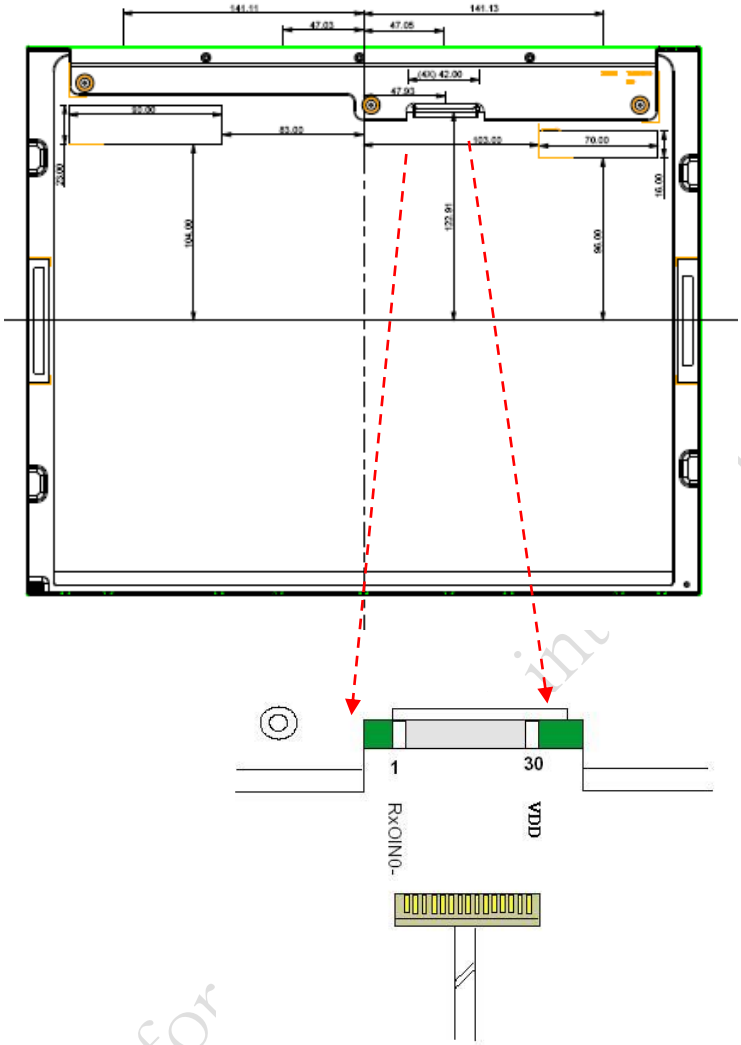

AUO Confidential for ... Use Only

3.3 Electrical Characteristics

3.3.1 Absolute Maximum Rating

Permanent damage may occur if exceeding the following maximum rating.

Symbol	Description	Min	Max	Unit	Remark
VDD	Power Supply Input Voltage	GND-0.3	6.0	[Volt]	Ta=25℃

3.3.2 Recommended Operating Condition

Symbol	Description	Min	Typ	Max	Unit	Remark
VDD	Power supply Input voltage	4.5	5.0	5.5	[Volt]	
IDD	Power supply Input Current (RMS)	-	0.53	0.64	[A]	VDD= 5.0V, Black Pattern, Fv=60Hz
			0.61	0.73	[A]	VDD= 5.0V, Black Pattern, Fv=75Hz
PDD	VDD Power Consumption	-	2.7	3.2	[Watt]	VDD= 5.0V, Black Pattern, Fv=60Hz
			3.05	3.7	[Watt]	VDD= 5.0V, Black Pattern, Fv=75Hz
IRush	Inrush Current	-	-	3.0	[A]	***Note 3-1***
VDDrp	Allowable VDD Ripple Voltage	-	-	500	[mV]	VDD= 5.0V, Black Pattern, Fv=75Hz

Note 3-1: Inrush Current measurement:

Test circuit:

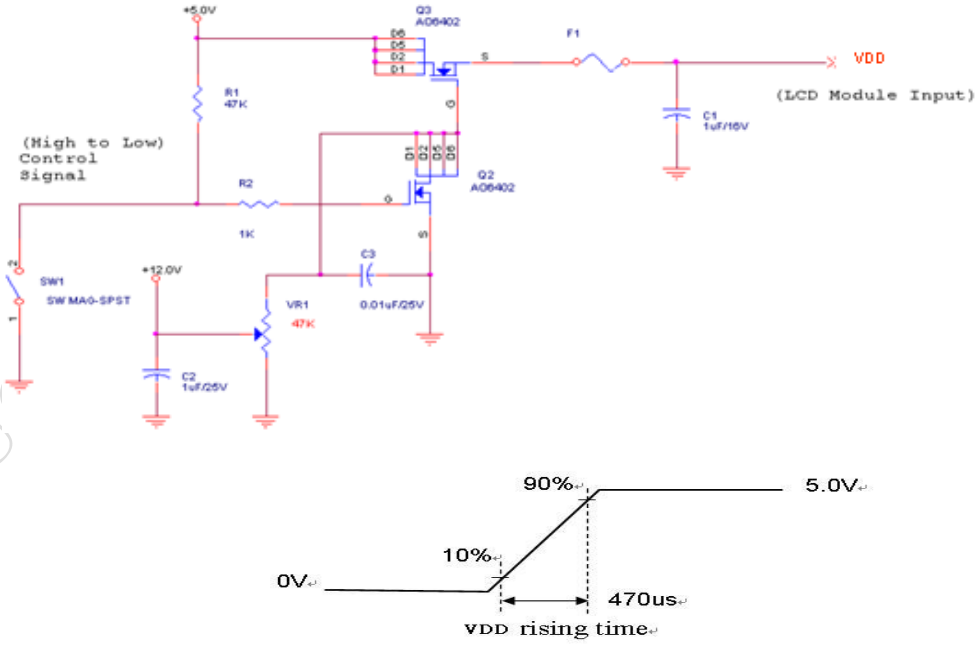

The duration of VDD rising time: 470us.

AUO Confidential for Acnepoint Internal Use Only

3.4 Signal Characteristics

3.4.1 LCD Pixel Format

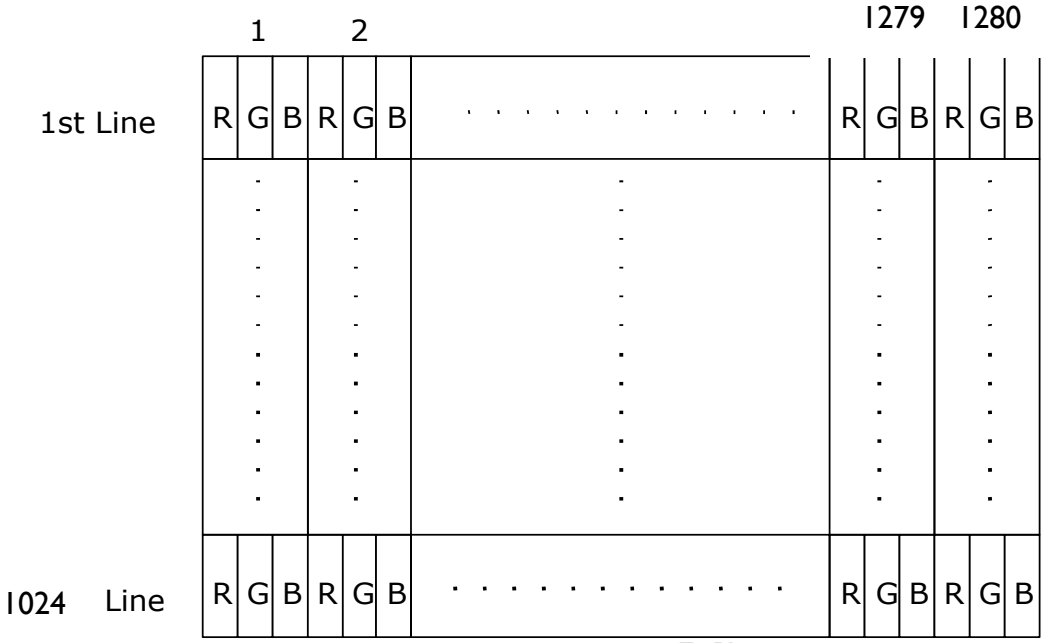

3.4.2 LVDS Data Format

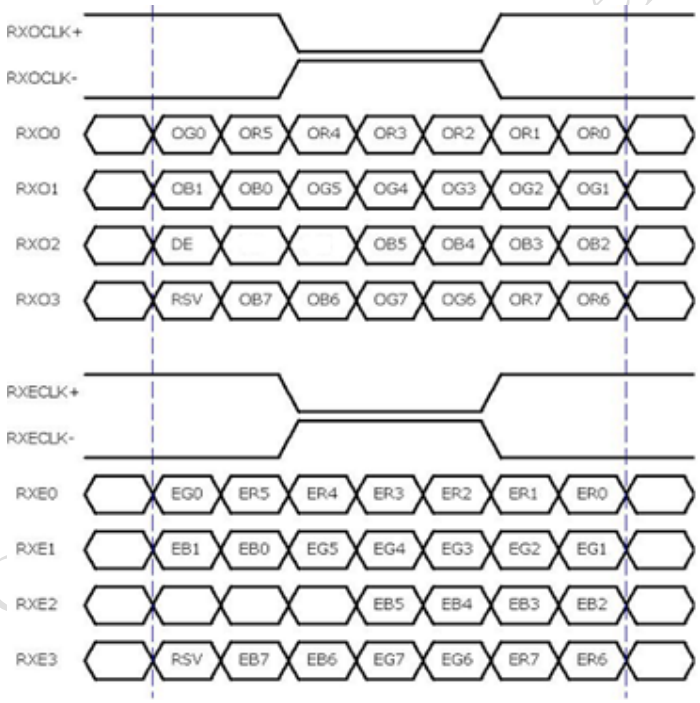

8 Bit Color Bit Order			
MSB	R7	G7	B7
	R6	G6	B6
	R5	G5	B5
	R4	G4	B4
	R3	G3	B3
	R2	G2	B2
	R1	G1	B1
LSB	R0	G0	B0

Note 3-2:

a. O = “Odd Pixel Data” E = “Even Pixel Data”

b. Refer to 3.4.1 LCD pixel format, the 1st data is 1 (Odd Pixel Data), the 2nd data is 2 (Even Pixel Data) and the last data is 1280 (Even Pixel Data).

AUO Only

3.4.3 Color versus Input Data

The following table is for color versus input data (8bit). The higher the gray level, the brighter the color.

Color	Gray Level	Color Input Data																								Remark
		RED data (MSB:R7, LSB:R0)								GREEN data (MSB:G7, LSB:G0)								BLUE data (MSB:B7, LSB:B0)								
		R7	R6	R5	R4	R3	R2	R1	R0	G7	G6	G5	G4	G3	G2	G1	G0	B7	B6	B5	B4	B3	B2	B1	B0	
Black	-	0	0	0	0	0	0	0	0	0	0	0	0	0	0	0	0	0	0	0	0	0	0	0	0	
White	-	1	1	1	1	1	1	1	1	1	1	1	1	1	1	1	1	1	1	1	1	1	1	1	1	
Gray 127	-	0	1	1	1	1	1	1	1	0	1	1	1	1	1	1	1	0	1	1	1	1	1	1	1	
Red	L0	0	0	0	0	0	0	0	0	0	0	0	0	0	0	0	0	0	0	0	0	0	0	0	0	Black
	:	:	:	:	:	:	:	:	:	:	:	:	:	:	:	:	:	:	:	:	:	:	:	:	:	:	
	L255	1	1	1	1	1	1	1	1	0	0	0	0	0	0	0	0	0	0	0	0	0	0	0	0	
Green	L0	0	0	0	0	0	0	0	0	0	0	0	0	0	0	0	0	0	0	0	0	0	0	0	0	Black
	:	:	:	:	:	:	:	:	:	:	:	:	:	:	:	:	:	:	:	:	:	:	:	:	:	:	
	L255	0	0	0	0	0	0	0	0	1	1	1	1	1	1	1	1	0	0	0	0	0	0	0	0	
Blue	L0	0	0	0	0	0	0	0	0	0	0	0	0	0	0	0	0	0	0	0	0	0	0	0	0	Black
	:	:	:	:	:	:	:	:	:	:	:	:	:	:	:	:	:	:	:	:	:	:	:	:	:	:	
	L255	0	0	0	0	0	0	0	0	0	0	0	0	0	0	0	0	1	1	1	1	1	1	1	1	

AUO Confidential for

3.4.4 LVDS Specification

a. DC Characteristics:

Symbol	Description	Min	Typ	Max	Units	Condition
V_{TH}	LVDS Differential Input High Threshold	-	-	+100	[mV]	V_{CM} = 1.2V
V_{TL}	LVDS Differential Input Low Threshold	-100	-	-	[mV]	V_{CM} = 1.2V
$\lvert V_{ID} \rvert$	LVDS Differential Input Voltage	100	-	600	[mV]	
V_{CM}	LVDS Common Mode Voltage	+1.0	+1.2	+1.5	[V]	V_{TH}-V_{TL} = 200mV

LVDS Signal Waveform:

Use RxOCLK- & RxOCLK+ as example.

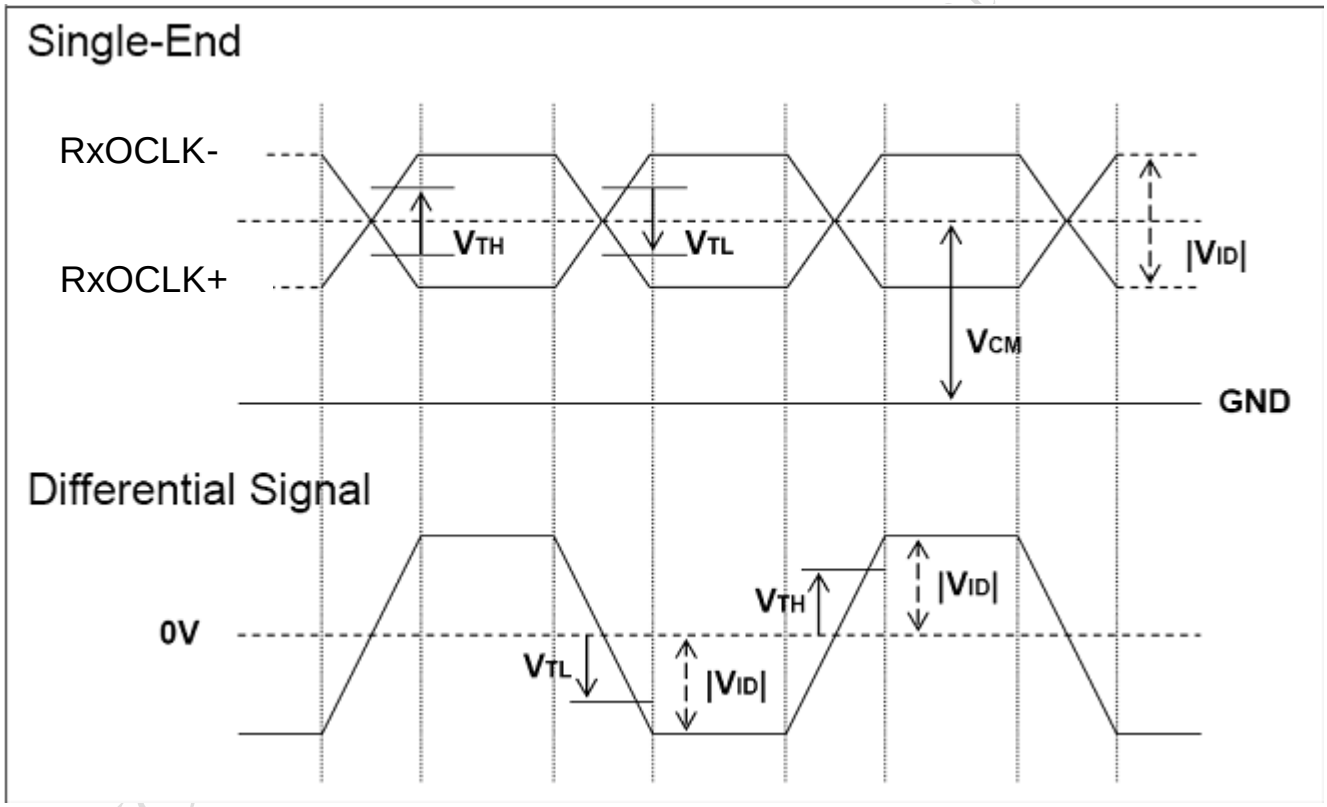

AUO Internal Use Only

b. AC Characteristics:

Symbol	Description	Min	Max	Unit	Remark
F_{DEV}	Maximum deviation of input clock frequency during Spread Spectrum	-	± 3	%	
F_{MOD}	Maximum modulation frequency of input clock during Spread Spectrum	-	200	KHz	

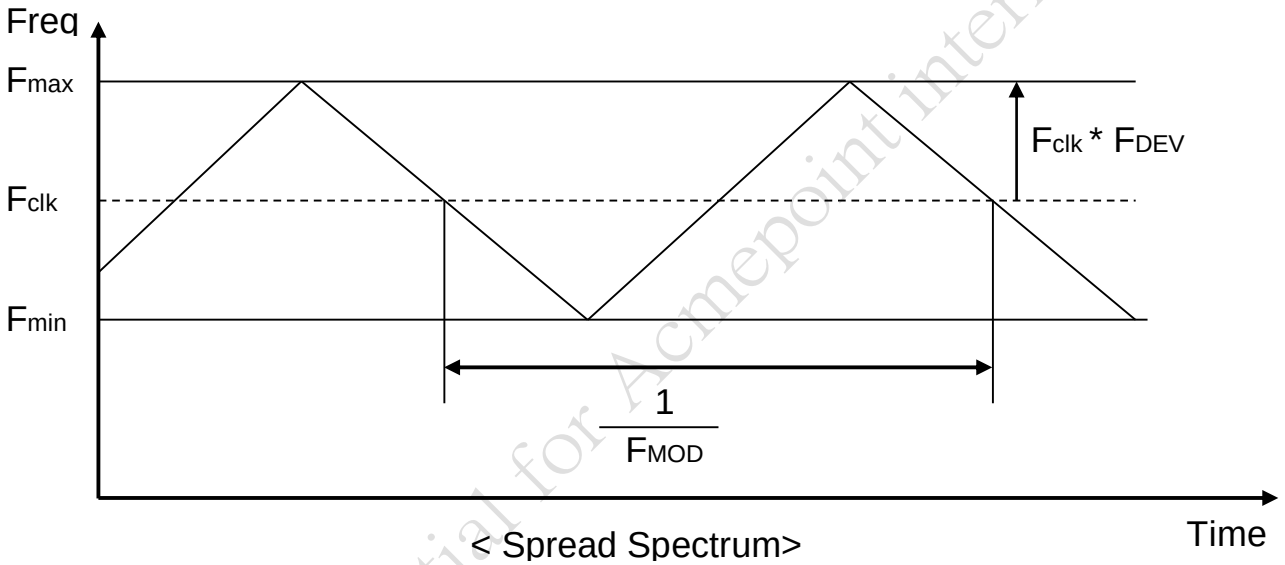

< Spread Spectrum>

Fclk: LVDS Clock Frequency

AUO Confidential for Acmepoint internal Use Only

3.4.5 Input Timing Specification

It only support DE mode, and the input timing are shown as the following table.

Symbol	Description		Min.	Typ.	Max.	Unit	Remark
Tv	Vertical Section	Period	1036	1066	1873	Th	
Tdisp (v)		Active	1024	1024	1024	Th	
Tblk (v)		Blanking	12	42	849	Th	
Fv		Frequency	50	60	76	Hz	***Note 3-3***
Th	Horizontal Section	Period	730	844	1320	Tclk	
Tdisp (h)		Active	640	640	640	Tclk	
Tblk (h)		Blanking	90	204	680	Tclk	
Fh		Frequency	51.8	64	93.7	KHz	***Note 3-4***
Tclk	LVDS Clock	Period	14.6	18.5	26.4	ns	1/Fclk
Fclk		Frequency	37.8	54	68.4	MHz	***Note 3-5***

Note 3-3: The optimal Vertical Frequency is 50~76 Hz for best picture quality

Note 3-4: The equation is listed as following. Please don't exceed the above recommended value.

Fh (Min.) = Fclk (Min.) / Th (Min.);
Fh (Typ.) = Fclk (Typ.) / Th (Typ.);
Fh (Max.)= Fclk (Max.) / Th (Min.);

Note 3-5: The equation is listed as following. Please don't exceed the above recommended value.

Fclk (Min.) = Fv (Min.) x Th (Min.) x Tv (Min.);
Fclk (Typ.) = Fv (Typ.) x Th (Typ.) x Tv (Typ.);
Fclk (Max.) = Fv (Max.) x Th (Typ.) x Tv (Typ.);

AUO Confidential for Acnemont internal Use Only

3.4.6 Input Timing Diagram

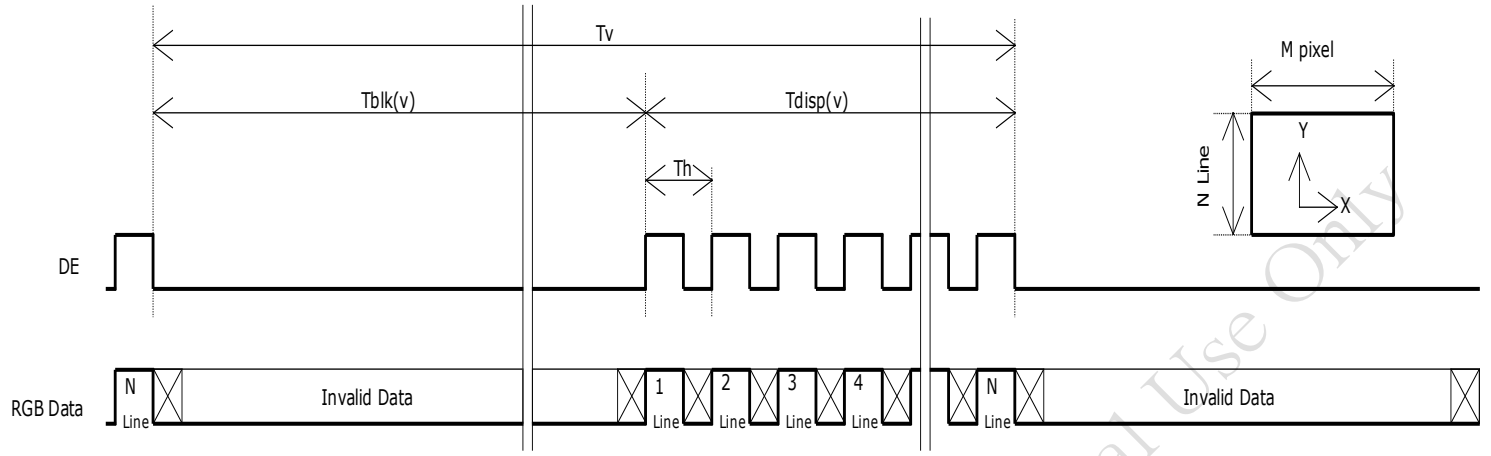

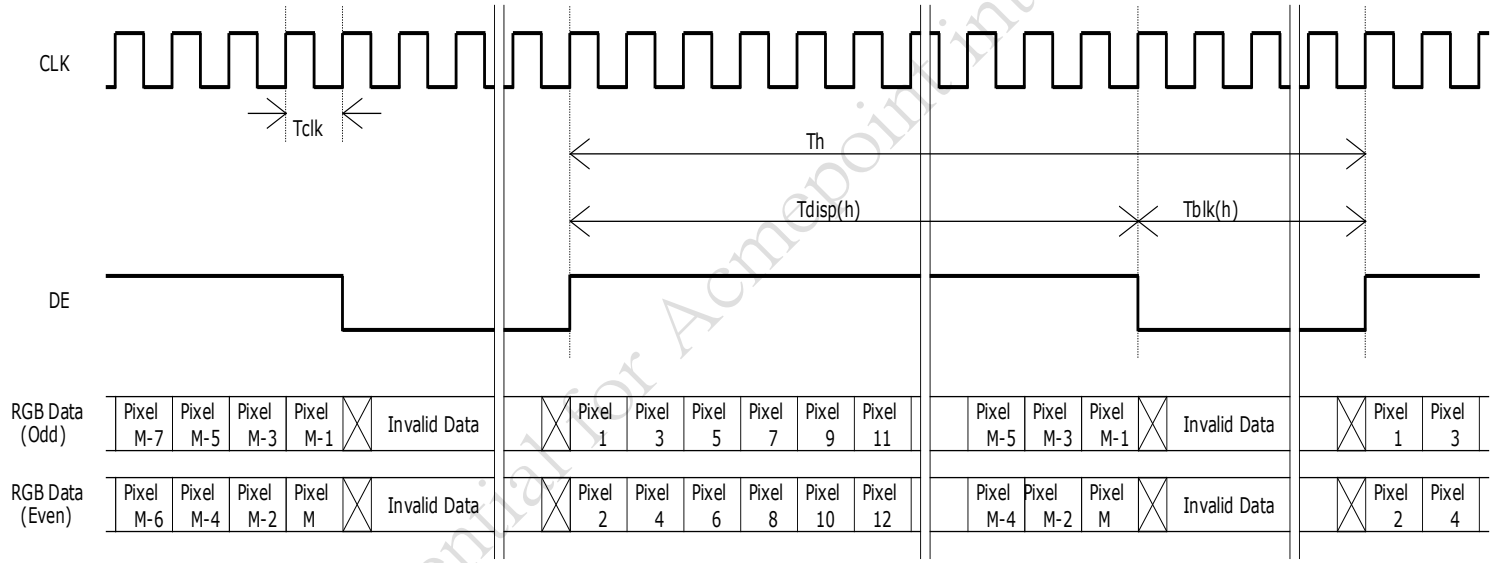

AUO Confidential for Acmepoint internal Use Only

3.5 Power ON/OFF Sequence

VDD power,LVDS signal and backlight on/off sequence are as following. LVDS signals from any system shall be Hi-Z state when VDD is off.

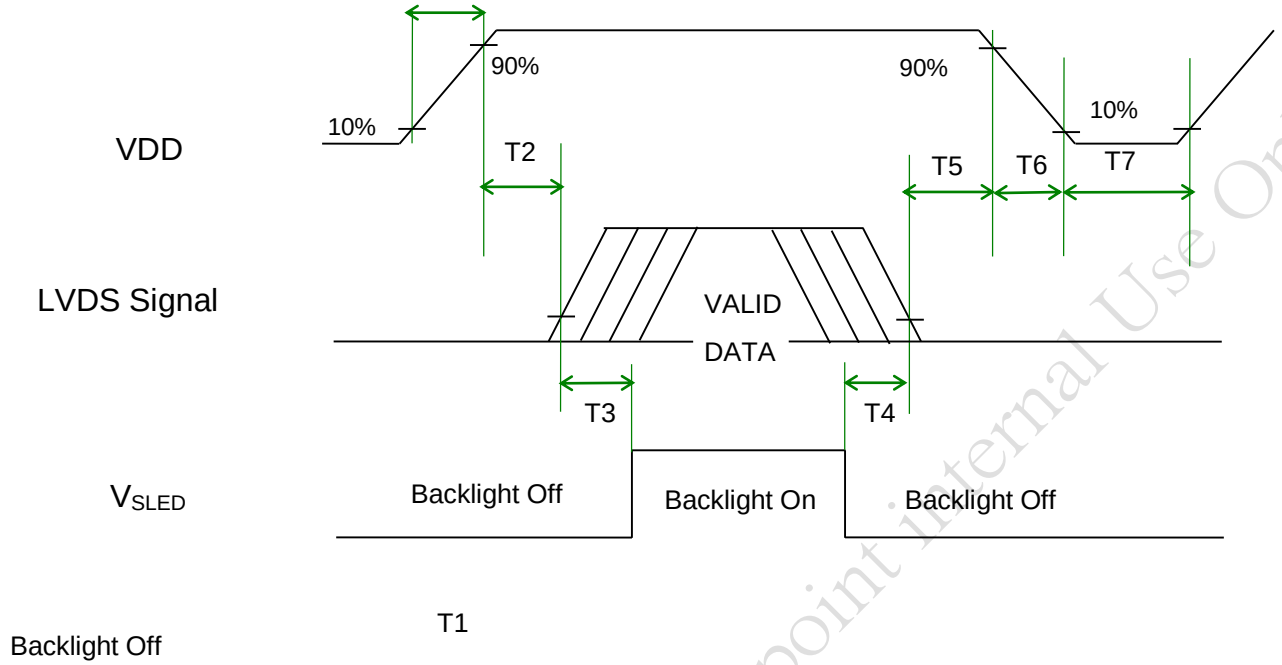

Power Sequence Timing

Symbol	Value			Unit	Remark
	Min.	Typ.	Max.		
T1	0.5	-	10	[ms]	
T2	0	-	50	[ms]	
T3	500	-	-	[ms]	
T4	100	-	-	[ms]	***Note 3-8***
T5	0		50	[ms]	***Note 3-6*** ***Note 3-7***
T6	0	-	200	[ms]	
T7	1000	-	-	[ms]	

Note 3-6 : Recommend setting T5 = 0ms to avoid electronic noise when VDD is off.
Note 3-7 : During T5 period , please keep the level of input LVDS signals with Hi-Z state.
Note 3-8 : If T4 < 100ms, there will be no reliability concern, but the display may momentarily show abnormal screen.

AUO Confidential Information compoint internal Use Only

4 Backlight Unit

4.1 Block Diagram

The following shows the block diagram of the 19.0 inch Backlight Unit. And it includes 44 pcs LED in the LED light bar. (4 strings and 11 pcs LED of one string).

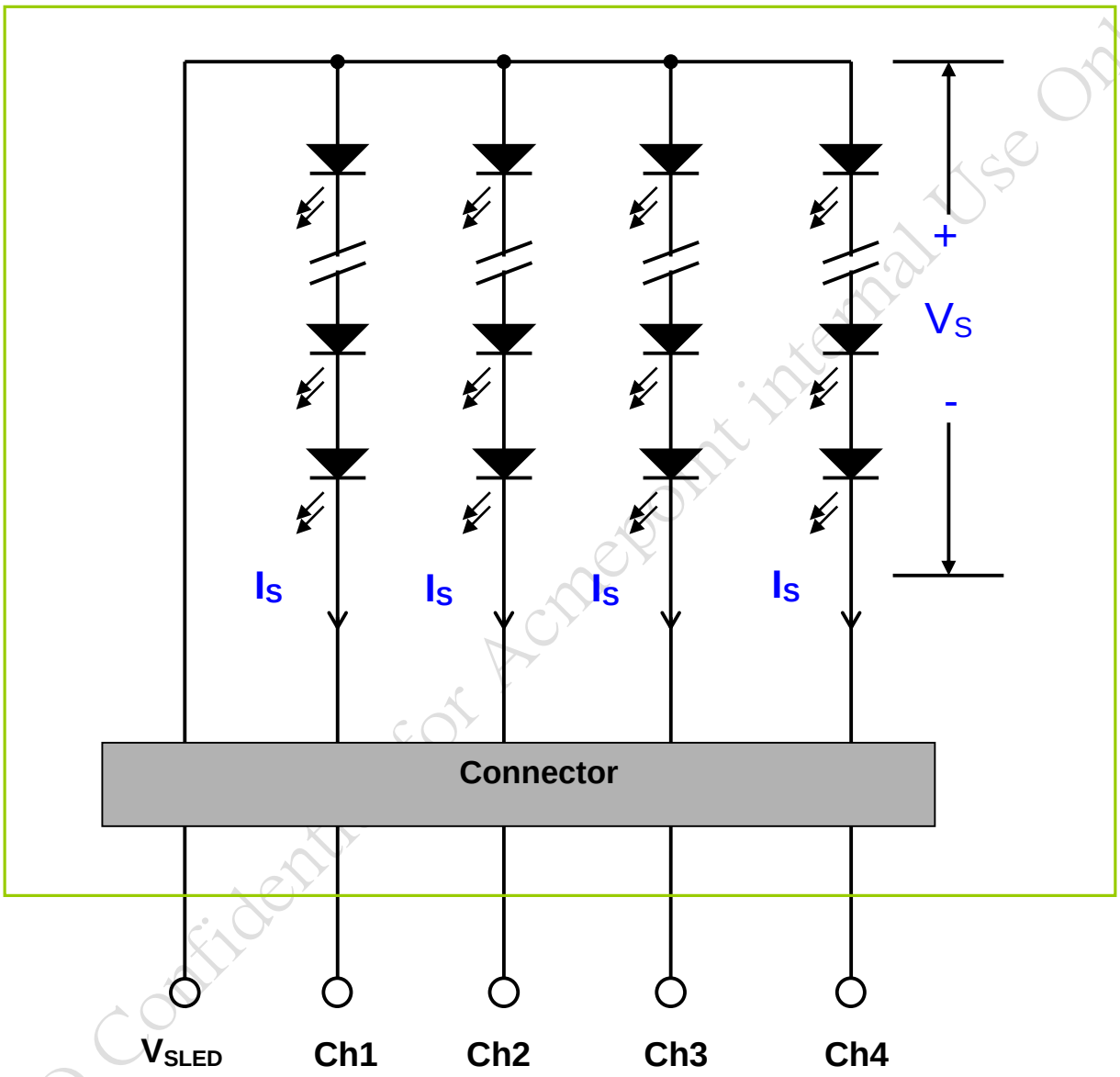

AUO Confidential for Acmepoint internal Use Only

4.2 Interface Connection

4.2.1 Connector Type

Backlight Connector	Manufacturer	ENTERY
	Part Number	3707K-S06N-21R
Mating Connector	Manufacturer	ENTERY
	Part Number	H112K-P06N-00B (Non-Locking type) H112K-P06N-13B (Locking type)

Backlight Connector dimension:

$H \times V \times D = 13.9 \times 3.00 \times 4.25, Pitch = 1.0(unit = mm)$

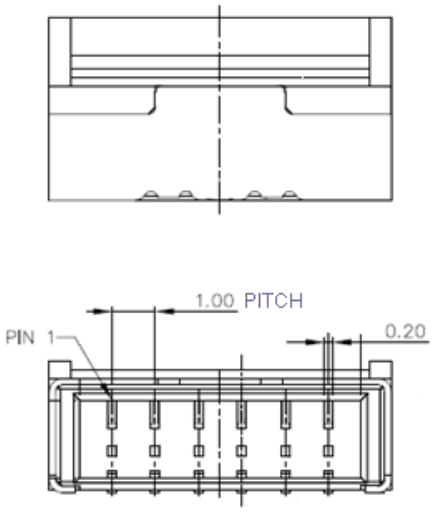

AUO Confidential for Acmepoint internal Use Only

Mating Connector dimension:

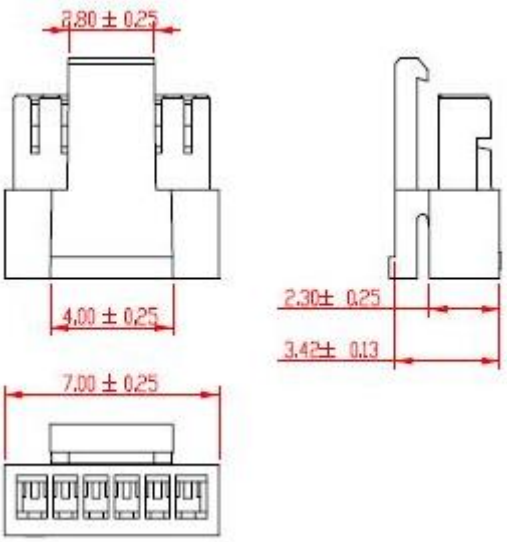

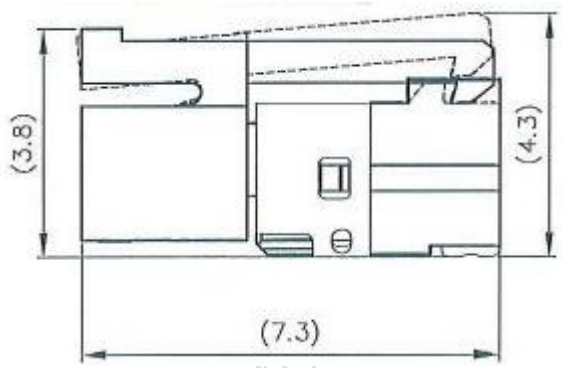

AUO Confidential for Acmepoint int only

4.2.2 Connector Pin Assignment

Pin#	Symbol	Description	Remark
1	Ch1	LED Current Feedback Terminal (Channel 1)	
2	Ch2	LED Current Feedback Terminal (Channel 2)	
3	V_{SLED}	LED Power Supply Voltage Input Terminal	
4	V_{SLED}	LED Power Supply Voltage Input Terminal	
5	Ch3	LED Current Feedback Terminal (Channel 3)	
6	Ch4	LED Current Feedback Terminal (Channel 4)	

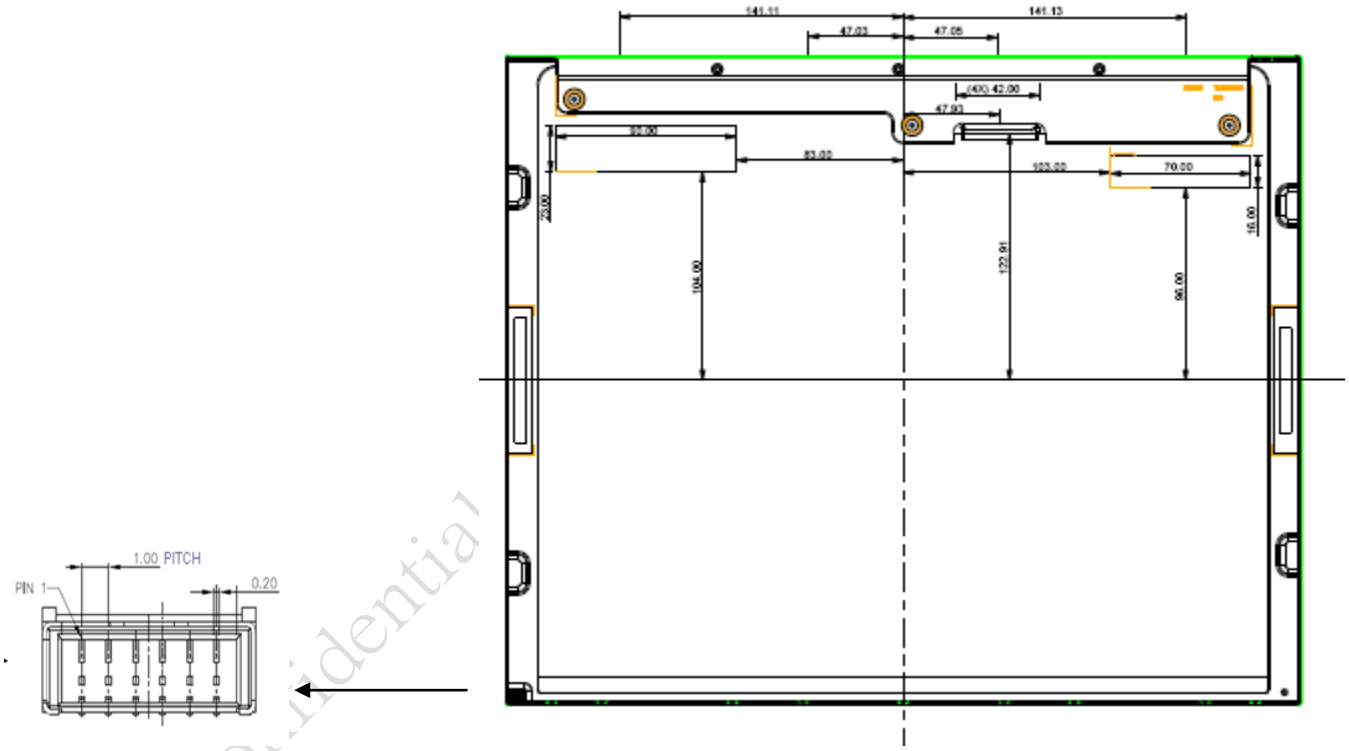

AUO Confidential Internal Use Only

4.3 Electrical Characteristics

4.3.1 Absolute Maximum Rating

Permanent damage may occur if exceeding the following maximum rating.

(Ta=25℃)

Symbol	Description	Min	Max	Unit	Remark
Is	LED String Current	0	90	[mA]	100% duty ratio

4.3.2 Recommended Operating Condition

(Ta=25℃)

Symbol	Description	Min.	Typ.	Max.	Unit	Remark
Is	LED String Current	-	50	53	[mA]	100% duty ratio of LED chip, **Note 4-6**
Vs	LED String Voltage	27.2	30.5	33.7	[Volt]	Is=50mA @ 100% duty ratio; ***Note 4-1, Note 4-5, Note 4-7***
ΔVs	Maximum Vs Voltage Deviation of light bar	-	-	2.2	[Volt]	Is=50mA @ 100% duty ratio; ***Note 4-2***
P_{BLU}	LED Light Bar Power Consumption	-	6.1	6.74	[Watt]	***Note 4-3***
LT_{LED}	LED Life Time	30,000	-	-	[Hour]	***Note 4-4***
OVP	Over Voltage Protection in system board	110% Vs(max)	-	-	[Volt]	***Note 4-5***

AUO Confidential for Acmepoint internal Use Only

Note 4-1: Vs (Typ.) = V_F (Typ.) X LED No. (one string);

a. V_F: LED chip forward voltage, V_F (Min.)=2.47V, V_F(Typ.)=2.77 V, V_F(Max.)=3.06V

b. The same euqation to calculate Vs(Min.) & Vs (Max.) for respective V_F (Min.) & V_F(Max.);

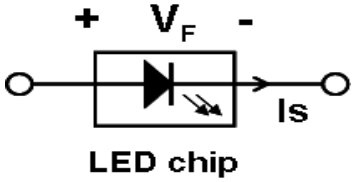

Note 4-2: ΔVs (Max.) = ΔV_F X LED No. (one string);

a. ΔV_F: LED chip forward voltage deviation; (0.2V , each Bin of LED V_F)

Note 4-3: P_{BLU} (Typ.) = Vs (Typ.) X Is (Typ.) X 4 ; (4 is total String No. of LED Light bar)

P_{BLU} (Max.) = Vs (Max.) X Is (Typ.) X 4 ;

Note 4-4: Definition of life time:

a. Brightness of LED becomes to 50% of its original value

b. Test condition: Is = 50mA and 25℃ (Room Temperature)

Note 4-5: Recommendation for LED driver power design:

Due to there are electrical property deviation in LED & monitor set system component after long time operation. AUO strongly recommend the design value of LED driver board OVP (over voltage protection) should be 10% higher than max. value of LED string voltage (Vs) at least.

Note 4-6: AUO strongly recommend "Analog Dimming" method for backlight brightness control for Wavy Noise Free. Otherwise, recommend that Dimming Control Signal (PWM Signal) should be synchronized with Frame Frequency.

Note 4-7: Ensure that the LED light bar is not subjected either forward or reverse voltage while monitor set is on standby mode or not in use.

AUO Confidential for Customer internal Use Only

5 Reliability Test

AUO reliability test items are listed as following table. (*Bare Panel only*)

Items	Condition	Remark
Temperature Humidity Bias (THB)	Ta= 50℃, 80%RH, 300hours	
High Temperature Operation (HTO)	Ta= 50℃, 50%RH, 300hours	
Low Temperature Operation (LTO)	Ta= 0℃, 300hours	
High Temperature Storage (HTS)	Ta= 60℃, 300hours	
Low Temperature Storage (LTS)	Ta= -20℃, 300hours	
Vibration Test (Non-operation)	Acceleration: 1.5 Grms Wave: Random Frequency: 10 - 200 Hz Sweep: 30 Minutes each Axis (X, Y, Z)	
Shock Test (Non-operation)	Acceleration: 50 G Wave: Half-sine Active Time: 20 ms Direction: ±X, ±Y, ±Z (one time for each Axis)	
Drop Test	Height: 46 cm, package test	
Thermal Shock Test (TST)	-20℃/30min, 60℃/30min, 100 cycles	***Note 5-1***
On/Off Test	On/10sec, Off/10sec, 30,000 cycles	
ESD (Electro Static Discharge)	Contact Discharge: ± 15KV, 150pF(330Ω) 1sec, 8 points, 25 times/ point. Air Discharge: ± 15KV, 150pF(330Ω) 1sec 8 points, 25 times/ point.	***Note 5-2***
Altitude Test	Operation:18,000 ft Non-Operation:40,000 ft	

Note 5-1: a. A cycle of rapid temperature change consists of varying the temperature from -20℃ to 60℃, and back again. Power is not applied during the test.
b. After finish temperature cycling, the unit is placed in normal room ambient for at least 4 hours before power on.

Note 5-2: EN61000-4-2, ESD class B: Certain performance degradation allowed
No data lost Self-
recoverable No
hardware failures.

ESD discharged points should avoid display area and periphery front bezel of display area. Suggest points were 4 side parallel edge of display area surface. Metal front bezel must cover half area of BM (black matrix), and metal front bezel must connect with metal back bezel to protect source IC of panel by ESD damaged.

AUO Confidential for Acer/Compal internal Use Only

Note 5-3 : Result Evaluation Criteria:

TFT-LCD panels test should take place after gradually cooling enough at room temperature In the normal application, there should be no particular problems that may affect the display function.

6 Shipping Label

The label is on the panel as shown below:

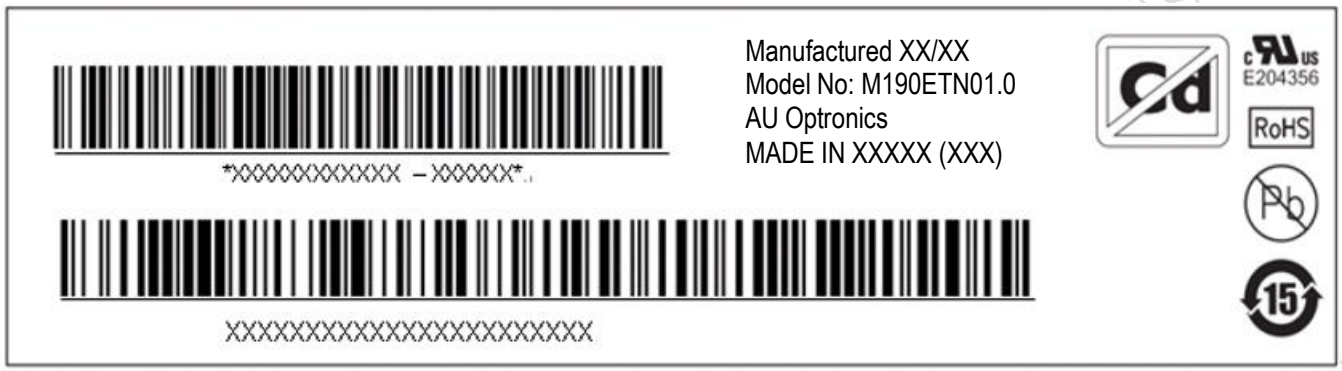

Note 6-1: For Pb Free products, AUO will add for identification.

Note 6-2: For RoHS compatible products, AUO will add for identification.

Note 6-3: For China RoHS compatible products, AUO will add for identification.

Note 6-4: The Green Mark will be presented only when the green documents have been ready by AUO Internal Green Team.

Note 6-5: To response ErP Lot5 regulation about "Cadmium (Cd) logo", display panel shall be labeled with additional new "Cd logo"

AUO Confidential for Acmeo Use Only

7 Mechanical Characteristics

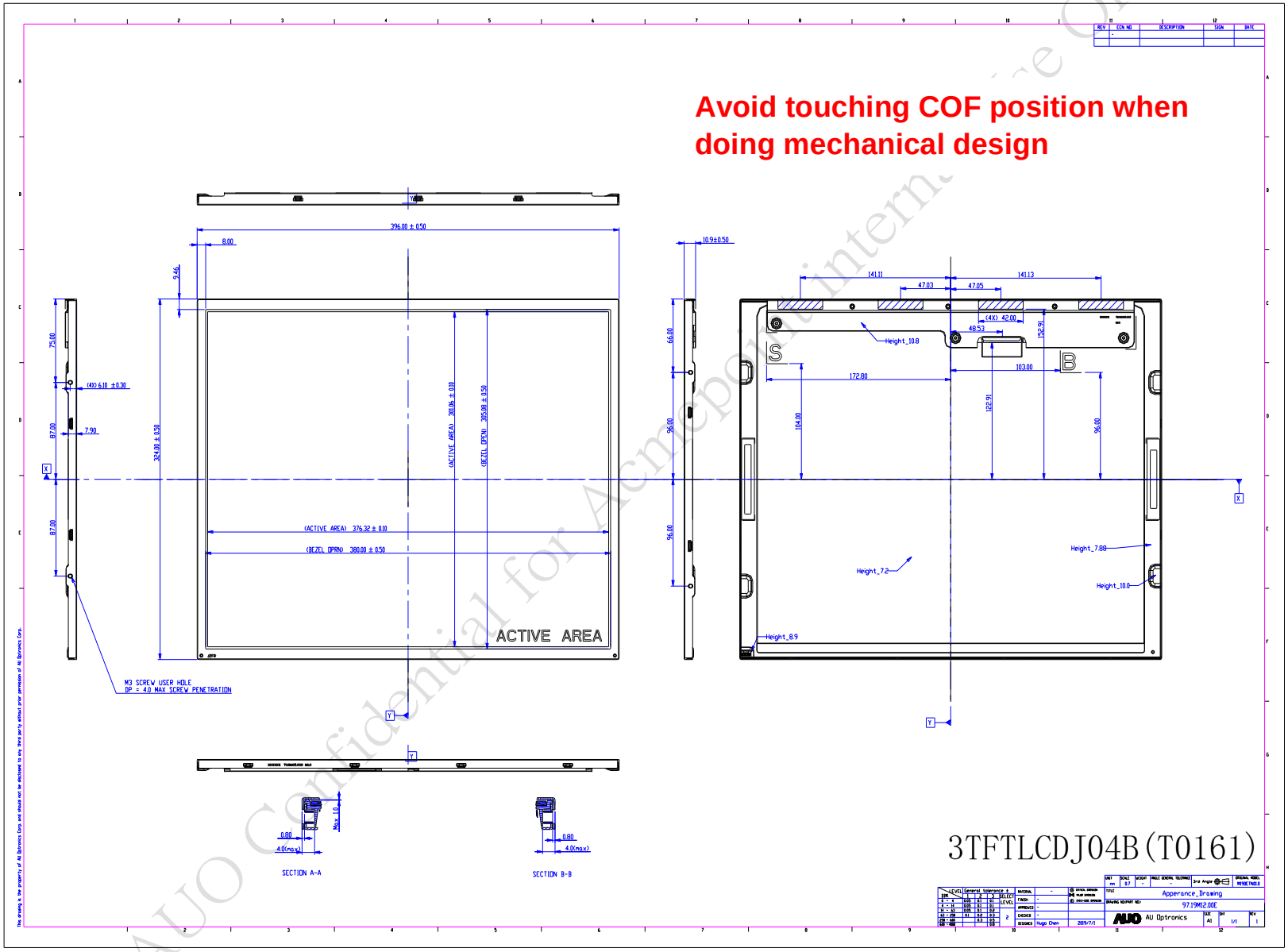

AUO Confidential for Acmepoint internal use Only

8 Packing Specification

8.1 Packing Flow

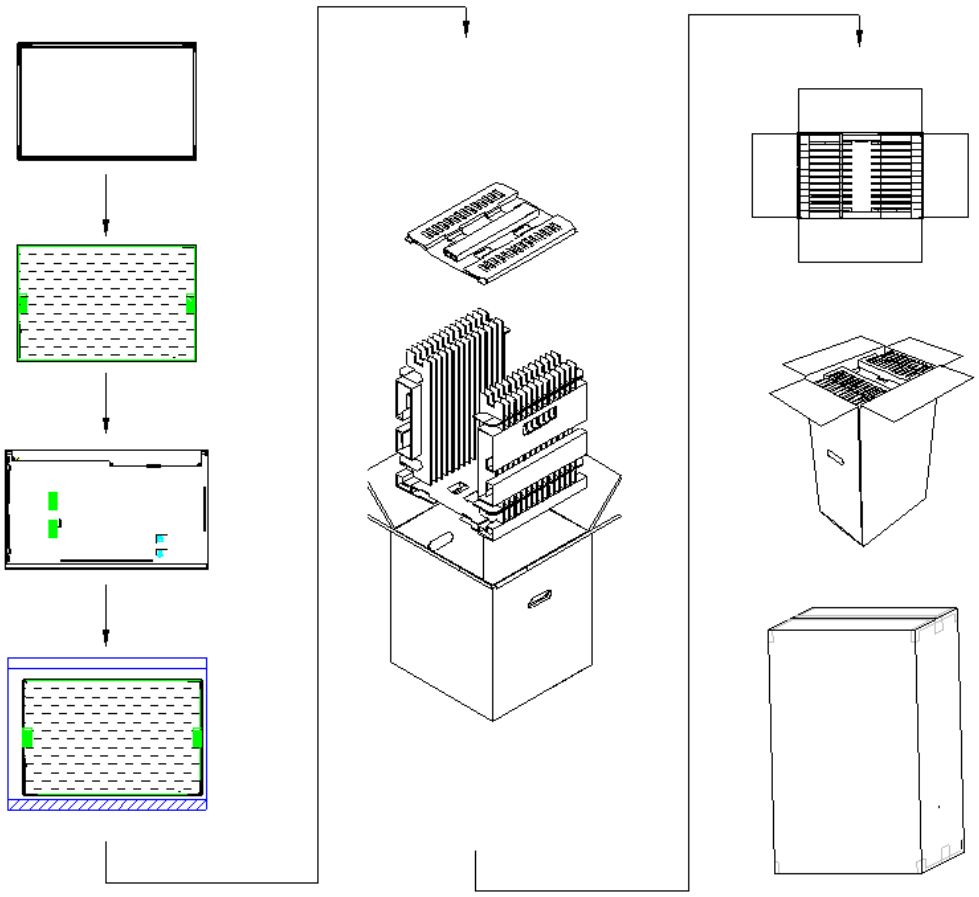

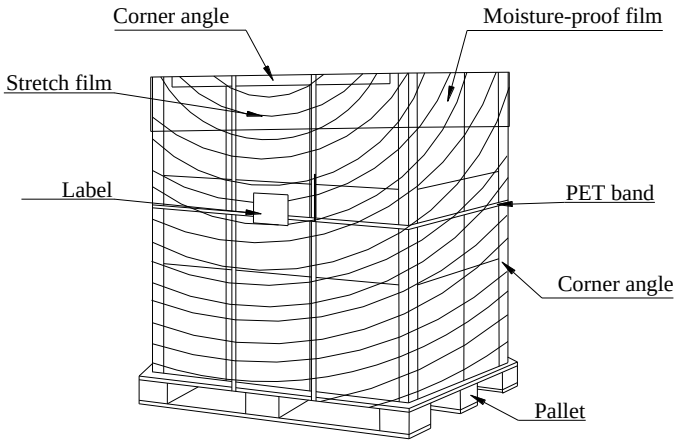

AUO Confi
Only

8.2 Pallet and shipment information

Item	Specification			Remark
	Q'ty	Dimension	Weight(kg)	
Panel	1	396(H)mm x 324(V)mm x 10.9(D)mm	1.7	*Note 1*
Cushion	1	--	1.85	
Box	1	409(L)mm x 367(W)mm x 475(H)mm	1.44	without Panel & cushion *Note 1*
Packing Box	13 pcs/Box	409(L)mm x 367(W)mm x 475(H)mm	25.39	with panel & cushion *Note 1*
Pallet	1	1150(L)mm x 840(W)mm x 132(H)mm	12	*Note 1*
Pallet after Packing	18 boxes/pallet	1150(L)mm x 840(W)mm x 156.5(H)mm	469.02	*Note 1*

Note 1: Estimated value which is subject to change based on real measured data.

AUO Confidential for Acmepoint internal Use Only