REV.	DATE	DESCRIPTION	BY	APVD
-	2024-11-07	FIRST RELEASE	Joseph	-

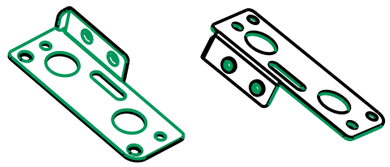

SCALE 1/2

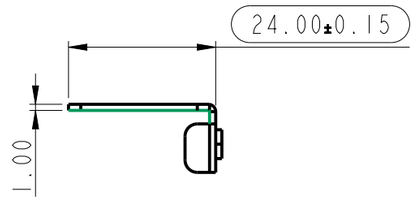



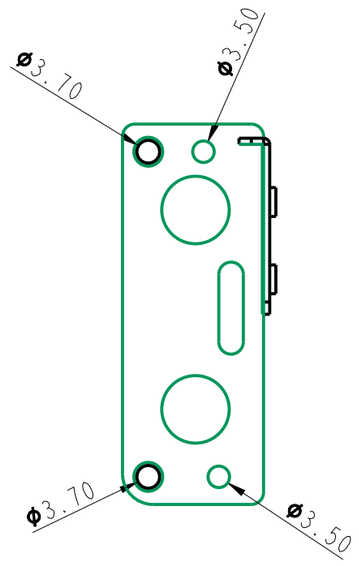

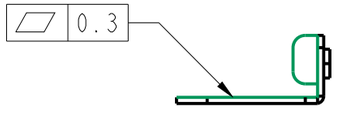

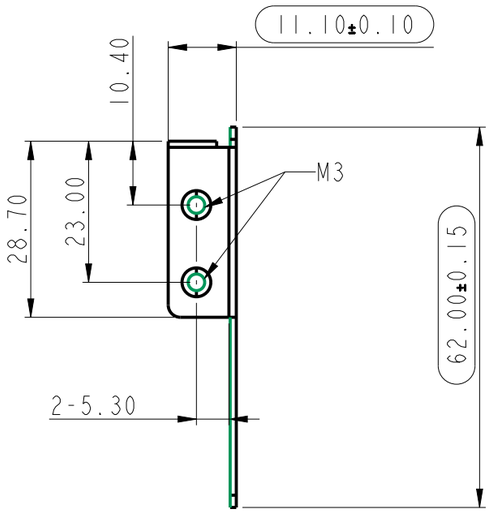

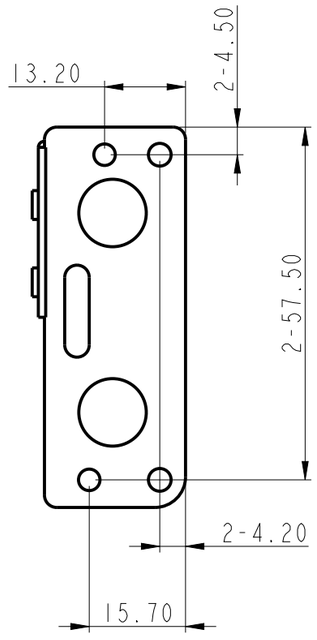

Note:
1. ⬭ Inspection dimension.
2. Plating:Ni
3. Painting:N/A
4. Burrs & sharp edges allowed in 0.1mm max, based on the principle of not hurtting hands.
5. Deformation and flatness distortion <=0.3MM
6. Unspecified dimension refer to CAD drawing file.
7. Extruded hole & tapping torque >=6kgf/cm
   Stand off/ NUT :Pull sterength >=20kgf ;Torque >=6kgf-cm.
8. DIVA QC inspection document NO.:QWI-014
9. No oil,Scratch,water marks ...cosmetic defect on surface.
10. RoHS compliant

RANGE OF DIMENSION	TOLERANCE CLASS DESIGNATION			
	fine	V medium	coarse	very coarse
0.5 up to 3	±0.05	±0.1	±0.2	±0.2
over 3 to 6	±0.05	±0.1	±0.3	±0.2
over 6 to 30	±0.1	±0.2	±0.5	±0.25
over 30 to 120	±0.15	±0.3	±0.8	±0.3
over 120 to 400	±0.2	±0.5	±1.2	±0.5
over 400 to 1000	±0.3	±0.8	±2.0	±0.8

ANGLE ±1° (±1.75/100)

THIRD ANGLE PROJECTION

DSGD by	Joseph	2024-11-07	
CHK by	Lasile	2024-11-07	
APVD by	Laslie	2024-11-07	

APVD NO.:

3D FILE NAME: 24_14601_LED_BRACKET

UNITS: mm | SCALE: 1/1 | SHEET: 1 OF 1 | MODEL NO.: RGT2422AM11

MATERIAL: SPCC 1.0t | TREATMENT: Plating Ni

PART NAME:

DIVA P/N:

Oisda NO.:

DIVA Laboratories ,Ltd.