



設計驗證
工程課
2024-11-14
發行
鈺緯科技開發股份有限公司

Wurth Electronics Co., Ltd.
伍仕電子股份有限公司台灣分公司
4F, No. 18-1, Sec. 6, Mincyuan East Road
Neihu District, Taipei City 114
Tel. +886 2 7918625 · Fax +886 2791 8701
統編: 27966146
www.we-online.com

Global Headquarters
Würth Elektronik eiSos GmbH & Co. KG
Max-Eyth-Straße 1 · 74638 Waldenburg · Germany
Tel. +49 7942 945-0 · Fax +49 7942 945-5000
eiSos@we-online.com · www.we-online.com

WÜRTH ELEKTRONIK MORE THAN YOU EXPECT

SPECIFICATION FOR APPROVAL

Customer :

DIVA Laboratories, Ltd.

Supplier Brandname :

Wurth Electronics Co.,Ltd.

Part number :

74271112

Customer Part number:

3H190002300001(H0217)

設計驗證
工程課
2024-11-14
發行
鈺緯科技開發股份有限公司

Description :

WE-HCF SMT High Current Inductor
Size 2818; L = 1.5 µH ; IR = 56 A; Isat = 91.8 A; RDC = 0.44 mΩ

Date :

2024/11/06

Dimensions: [mm]

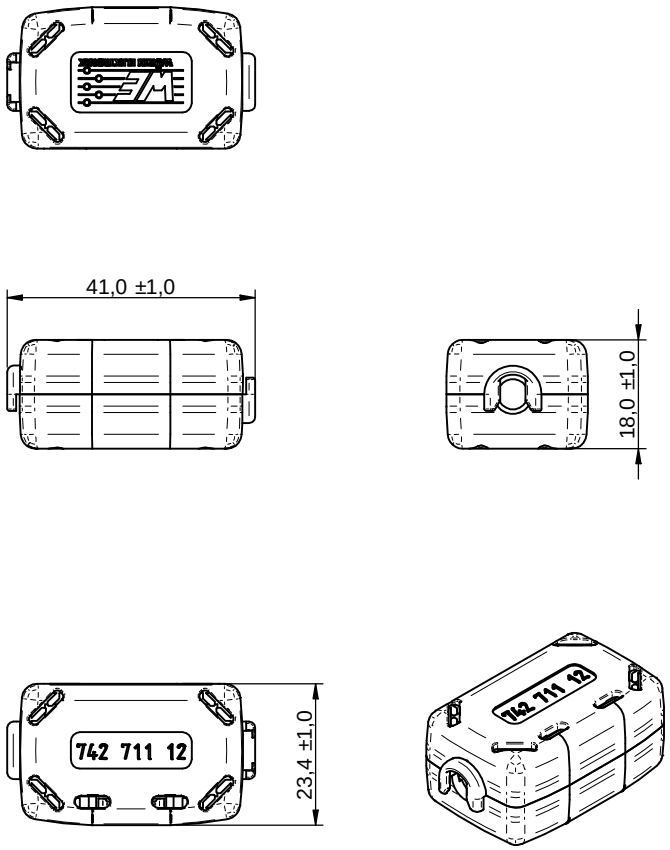

Scale - 1:1,25

Applicable Cable Diameter: [mm]

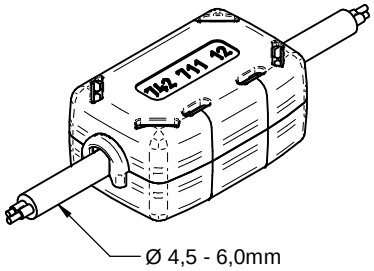

Scale - 1:1,25

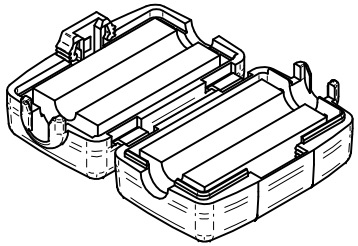

Scale - 1:1,25

Electrical Properties:

Properties		Test conditions	Value	Unit	Tol.
Impedance @ 25 MHz 1 turn	Z	25 MHz	176	Ω	±25%
Impedance @ 100 MHz 1 turn	Z	100 MHz	321	Ω	±25%
Impedance @ 25 MHz 2 turns	Z	25 MHz	773	Ω	typ.
Impedance @ 100 MHz 2 turns	Z	100 MHz	806	Ω	typ.

Certification:

RoHS Approval	Compliant [2011/65/EU&2015/863]
REACh Approval	Conform or declared [(EC)1907/2006]
Halogen Free	Conform [JEDEC JS709B]
Halogen Free	Conform [IEC 61249-2-21]

General Information:

Temperature during mounting process	+15 °C up to +35 °C
Operating Temperature	-25 up to +105 °C
Storage Conditions (in original packaging)	< 40 °C ; < 75 % RH
Storage Conditions (for single parts)	15 °C up to + 35 °C; 45 % up to 65 % RH
Test conditions of Electrical Properties: +20 °C, 33 % RH if not specified differently	

Additional Features:

Safety Key to unlock	74271
STAR-CLIP Fixation	7427711

設計驗證
工程課
2024-11-14
發行
鈺邑科技開發股份有限公司

3H190002300001 (H0217)

RoHS COMPLIANT · REACh COMPLIANT · HALOGEN FREE

WÜRTH ELEKTRONIK MORE THAN YOU EXPECT

Würth Elektronik eiSos GmbH & Co. KG
EMC & Inductive Solutions
Max-Eyth-Str. 1
74638 Waldenburg
Germany
Tel. +49 (0) 79 42 945 - 0
www.we-online.com
eiSos@we-online.com

CHECKED	REVISION	DATE (YYYY-MM-DD)	GENERAL TOLERANCE	PROJECTION METHOD
NFi	008.002	2023-05-15	DIN ISO 2768-1c	

DESCRIPTION
WE-STAR-TEC Snap Ferrite with safety key technology

ORDER CODE
74271112

BUSINESS UNIT	STATUS	PAGE
eiSos	Valid	1/6

This electronic component has been designed and developed for usage in general electronic equipment only. This product is not authorized for use in equipment where a higher safety standard and reliability standard is especially required or where a failure of the product is reasonably expected to cause severe personal injury or death, unless the parties have executed an agreement specifically governing such use. Moreover Würth Elektronik eiSos GmbH & Co KG products are neither designed nor intended for use in areas such as military, aerospace, aviation, nuclear control, submarine, transportation, transportation signal, disaster prevention, medical, public information network etc.. Würth Elektronik eiSos GmbH & Co KG must be informed about the intent of such usage before the design-in stage. In addition, sufficient reliability evaluation checks for safety must be performed on every electronic component which is used in electrical circuits that require high safety and reliability functions or performance.

Properties		Value	Unit	Tol.
Material	4 W 620			
Initial Permeability	μ_i	620		typ.
Curie Temperature	T_C	150	°C	typ.
Plastic Housing Color	Grey			
Plastic Housing Flammability Rating	UL94 V-0			
Test Cable	AWG26			
Test Cable Length		90	mm	
Cable Diameter		4.5 - 6	mm	

Typical Impedance Characteristics:

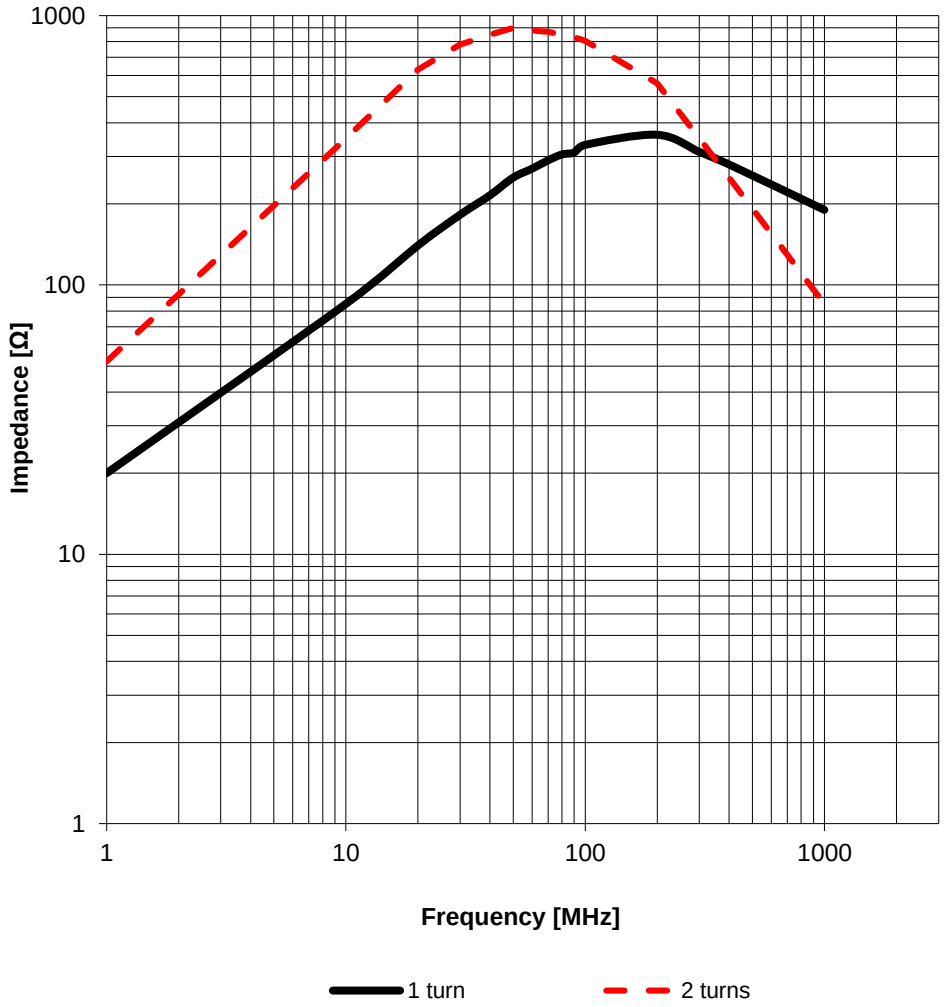

RoHS COMPLIANT · REACh COMPLIANT · HALOGEN FREE

WÜRTH ELEKTRONIK MORE THAN YOU EXPECT

Würth Elektronik eiSos GmbH & Co. KG
EMC & Inductive Solutions
Max-Eyth-Str. 1
74638 Waldenburg
Germany
Tel. +49 (0) 79 42 945 - 0
www.we-online.com
eiSos@we-online.com

CHECKED	REVISION	DATE (YYYY-MM-DD)	GENERAL TOLERANCE	PROJECTION METHOD
NFi	008.002	2023-05-15	DIN ISO 2768-1c	

DESCRIPTION
WE-STAR-TEC Snap Ferrite with safety key technology

ORDER CODE
74271112

BUSINESS UNIT	STATUS	PAGE
eiSos	Valid	2/6

This electronic component has been designed and developed for usage in general electronic equipment only. This product is not authorized for use in equipment where a higher safety standard and reliability standard is especially required or where a failure of the product is reasonably expected to cause severe personal injury or death, unless the parties have executed an agreement specifically governing such use. Moreover Würth Elektronik eiSos GmbH & Co KG products are neither designed nor intended for use in areas such as military, aerospace, aviation, nuclear control, submarine, transportation, transportation signal, disaster prevention, medical, public information network etc.. Würth Elektronik eiSos GmbH & Co KG must be informed about the intent of such usage before the design-in stage. In addition, sufficient reliability evaluation checks for safety must be performed on every electronic component which is used in electrical circuits that require high safety and reliability functions or performance.

Packaging Specification - Tray: [mm]

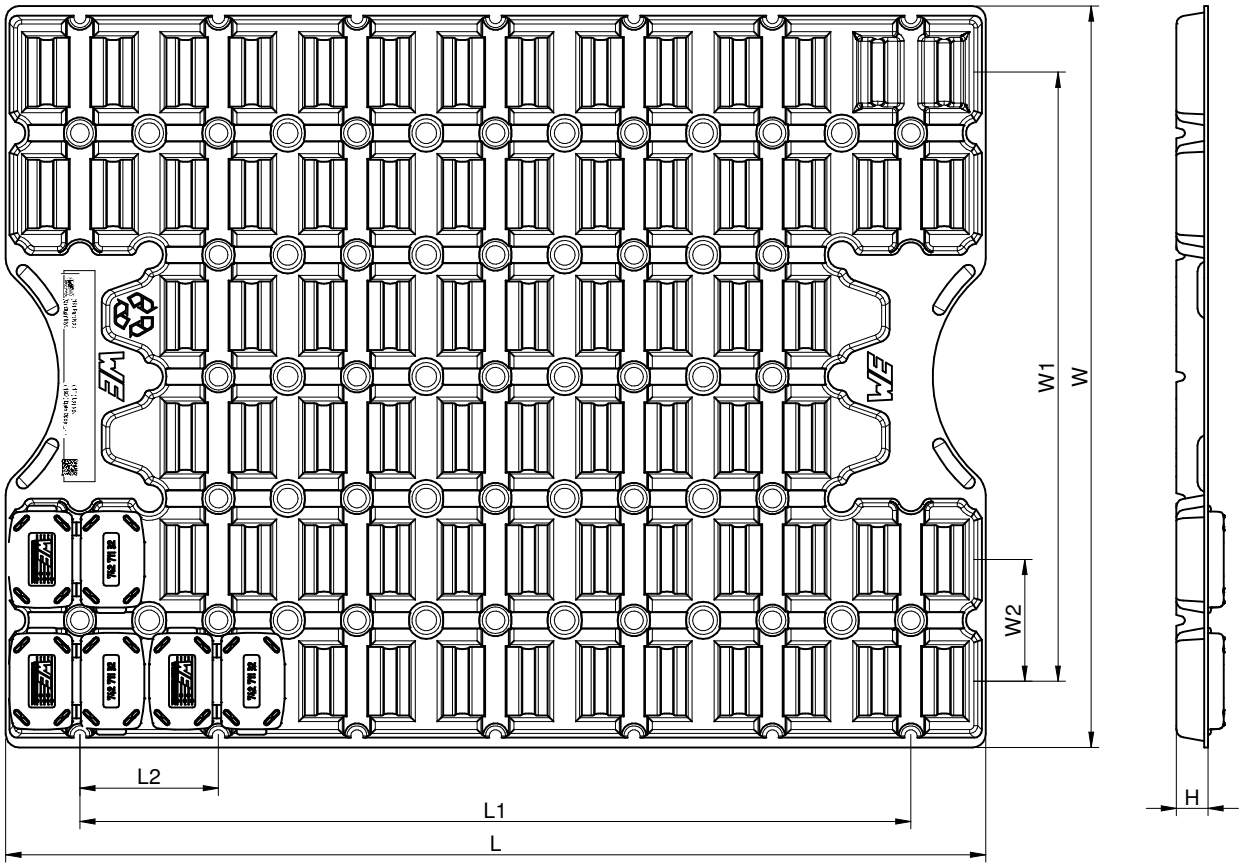

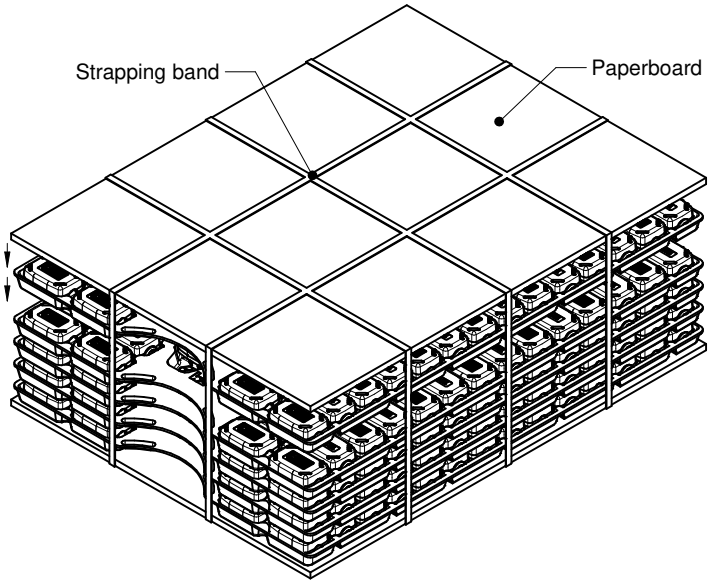

L (mm)	L1 (mm)	L2 (mm)	W (mm)	W1 (mm)	W2 (mm)	H (mm)	Qty. (pcs.)	Material
typ.	typ.	typ.	typ.	typ.	typ.	typ.		
370,00	318,80	52,30	280,00	230,00	46,00	12,00	38	Paper

RoHS COMPLIANT | REACh COMPLIANT | HALOGEN FREE

WÜRTH ELEKTRONIK MORE THAN YOU EXPECT

Würth Elektronik eiSos GmbH & Co. KG
EMC & Inductive Solutions
Max-Eyth-Str. 1
74638 Waldenburg
Germany
Tel. +49 (0) 79 42 945 - 0
www.we-online.com
eiSos@we-online.com

CHECKED	REVISION	DATE (YYYY-MM-DD)	GENERAL TOLERANCE	PROJECTION METHOD
NFi	008.002	2023-05-15	DIN ISO 2768-1c	

DESCRIPTION
WE-STAR-TEC Snap Ferrite with safety key technology

ORDER CODE
74271112

BUSINESS UNIT	STATUS	PAGE
eiSos	Valid	3/6

This electronic component has been designed and developed for usage in general electronic equipment only. This product is not authorized for use in equipment where a higher safety standard and reliability standard is especially required or where a failure of the product is reasonably expected to cause severe personal injury or death, unless the parties have executed an agreement specifically governing such use. Moreover Würth Elektronik eiSos GmbH & Co KG products are neither designed nor intended for use in areas such as military, aerospace, aviation, nuclear control, submarine, transportation, transportation signal, disaster prevention, medical, public information network etc.. Würth Elektronik eiSos GmbH & Co KG must be informed about the intent of such usage before the design-in stage. In addition, sufficient reliability evaluation checks for safety must be performed on every electronic component which is used in electrical circuits that require high safety and reliability functions or performance.

Packaging Specification - Outer Carton: [mm]

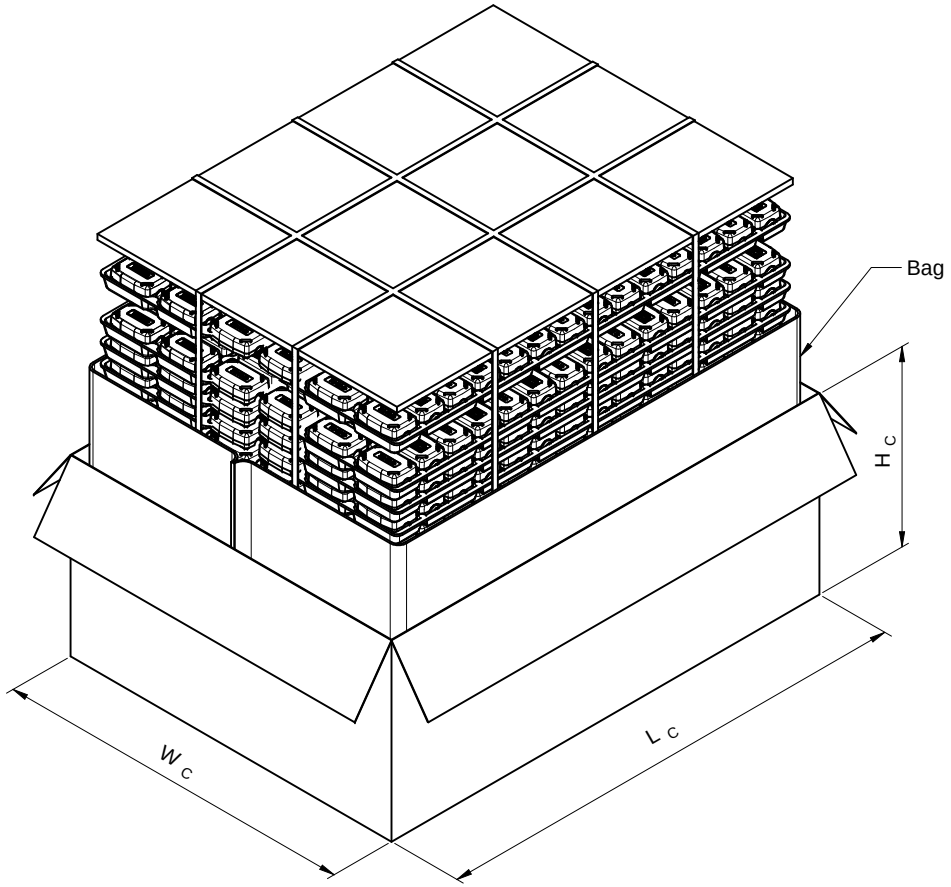

L_C (mm)	W_C (mm)	H_C (mm)	No. of Tray (pcs.)	No. of Paperboard (pcs.)	Qty. (pcs.)	Material
typ.	typ.	typ.				
400,00	300,00	163,00	6	2	228	Paper

RoHS COMPLIANT | REACh COMPLIANT | HALOGEN FREE

WÜRTH ELEKTRONIK MORE THAN YOU EXPECT

Würth Elektronik eiSos GmbH & Co. KG
EMC & Inductive Solutions
Max-Eyth-Str. 1
74638 Waldenburg
Germany
Tel. +49 (0) 79 42 945 - 0
www.we-online.com
eiSos@we-online.com

CHECKED	REVISION	DATE (YYYY-MM-DD)	GENERAL TOLERANCE	PROJECTION METHOD
NFi	008.002	2023-05-15	DIN ISO 2768-1c	

DESCRIPTION
WE-STAR-TEC Snap Ferrite with safety key technology

ORDER CODE
74271112

BUSINESS UNIT	STATUS	PAGE
eiSos	Valid	4/6

This electronic component has been designed and developed for usage in general electronic equipment only. This product is not authorized for use in equipment where a higher safety standard and reliability standard is especially required or where a failure of the product is reasonably expected to cause severe personal injury or death, unless the parties have executed an agreement specifically governing such use. Moreover Würth Elektronik eiSos GmbH & Co KG products are neither designed nor intended for use in areas such as military, aerospace, aviation, nuclear control, submarine, transportation, transportation signal, disaster prevention, medical, public information network etc.. Würth Elektronik eiSos GmbH & Co KG must be informed about the intent of such usage before the design-in stage. In addition, sufficient reliability evaluation checks for safety must be performed on every electronic component which is used in electrical circuits that require high safety and reliability functions or performance.

Cautions and Warnings:

The following conditions apply to all goods within the product series of STAR-TEC of Würth Elektronik eiSos GmbH & Co. KG:

General:

- This electronic component is designed and manufactured for use in general electronic equipment.
- Würth Elektronik must be asked for written approval (following the PPAP procedure) before incorporating the components into any equipment in fields such as military, aerospace, aviation, nuclear control, submarine, transportation (automotive control, train control, ship control), transportation signal, disaster prevention, medical, public information network, etc. where higher safety and reliability are especially required and/or if there is the possibility of direct damage or human injury.
- Electronic components that will be used in safety-critical or high-reliability applications, should be pre-evaluated by the customer.
- The component is designed and manufactured to be used within the datasheet specified values. If the usage and operation conditions specified in the datasheet are not met, the wire insulation may be damaged or dissolved.
- Do not drop or impact the components, the component may be damaged.
- Würth Elektronik products are qualified according to international standards, which are listed in each product reliability report. Würth Elektronik does not warrant any customer qualified product characteristics beyond Würth Elektroniks' specifications, for its validity and sustainability over time.
- The responsibility for the applicability of the customer specific products and use in a particular customer design is always within the authority of the customer. All technical specifications for standard products also apply to customer specific products.

Product specific:

Cleaning and Washing:

- Washing agents used during the production to clean the customer application might damage or change the characteristics of the component. Washing agents may have a negative effect on the long-term functionality of the product.

Potting:

- If the product is potted in the customer application, the potting material might shrink or expand during and after hardening. Shrinking could lead to an incomplete seal, allowing contaminants into the core. Expansion could damage the components. We recommend a manual inspection after potting to avoid these effects.

Storage Conditions:

- A storage of Würth Elektronik products for longer than 12 months is not recommended. The material characteristics of the electronic components create a limiting factor for the storage stability. Therefore, all products shall be used within the period of 12 months based on the day of shipment.
- Do not expose the components into direct sunlight.
- The storage condition in the original packaging is defined according to DIN EN 61760-2.
- The packaging of the products (Moisture Impermeable Bag) is to maintain the required moisture level of the plastic housings. To ensure this moisture level, the product either has to be stored in the original sealed packaging or needs to be stored in a humidity and temperature controlled storage room. Otherwise, the product may lose the required moisture level and its mechanical properties. In this case, you can re-condition the products according to the internal standard WE-Standard 1581 to ensure the required moisture level in the plastic.
- For further information about this internal standard please refer to the document 'WE-Standard 1581' which can be downloaded from the respective product page on our website.
- The storage conditions stated in the original packaging apply to the storage time and not to the transportation time of the components.

Packaging:

- The packaging specifications apply only to purchase orders comprising whole packaging units. If the ordered quantity exceeds or is lower than the specified packaging unit, packaging in accordance with the packaging specifications cannot be ensured.

Handling:

- Violation of the technical product specifications such as exceeding the maximum outer diameter of the cable will void the warranty.
- The usage in acidly as well as salted environment can be the reason for oxide (rust) at the surface of the ferrite body, damage or changes to the characteristics of the material. The acidly or salted environment could have a negative effect on the long term function of the product.
- To ensure the operating mode of the product, the ambient temperature at processing (when the part will be mounted on the cable) has to be in the range of 15 to 35 °C. Before mounting, the part should be stored for one hour under this condition.
- The temperature rise of the component must be taken into consideration. The operating temperature is comprised of ambient temperature and temperature rise of the component.The operating temperature of the component shall not exceed the maximum temperature specified.

These cautions and warnings comply with the state of the scientific and technical knowledge and are believed to be accurate and reliable. However, no responsibility is assumed for inaccuracies or incompleteness.

RoHS COMPLIANT | REACh COMPLIANT | HALOGEN FREE

WÜRTH ELEKTRONIK MORE THAN YOU EXPECT

Würth Elektronik eiSos GmbH & Co. KG
EMC & Inductive Solutions
Max-Eyth-Str. 1
74638 Waldenburg
Germany
Tel. +49 (0) 79 42 945 - 0
www.we-online.com
eiSos@we-online.com

CHECKED	REVISION	DATE (YYYY-MM-DD)	GENERAL TOLERANCE	PROJECTION METHOD
NFi	008.002	2023-05-15	DIN ISO 2768-1c	

DESCRIPTION
WE-STAR-TEC Snap Ferrite with safety key technology

ORDER CODE
74271112

BUSINESS UNIT	STATUS	PAGE
eiSos	Valid	5/6

This electronic component has been designed and developed for usage in general electronic equipment only. This product is not authorized for use in equipment where a higher safety standard and reliability standard is especially required or where a failure of the product is reasonably expected to cause severe personal injury or death, unless the parties have executed an agreement specifically governing such use. Moreover Würth Elektronik eiSos GmbH & Co KG products are neither designed nor intended for use in areas such as military, aerospace, aviation, nuclear control, submarine, transportation, transportation signal, disaster prevention, medical, public information network etc.. Würth Elektronik eiSos GmbH & Co KG must be informed about the intent of such usage before the design-in stage. In addition, sufficient reliability evaluation checks for safety must be performed on every electronic component which is used in electrical circuits that require high safety and reliability functions or performance.

Important Notes

The following conditions apply to all goods within the product range of Würth Elektronik eiSos GmbH & Co. KG:

1. General Customer Responsibility

Some goods within the product range of Würth Elektronik eiSos GmbH & Co. KG contain statements regarding general suitability for certain application areas. These statements about suitability are based on our knowledge and experience of typical requirements concerning the areas, serve as general guidance and cannot be estimated as binding statements about the suitability for a customer application. The responsibility for the applicability and use in a particular customer design is always solely within the authority of the customer. Due to this fact it is up to the customer to evaluate, where appropriate to investigate and decide whether the device with the specific product characteristics described in the product specification is valid and suitable for the respective customer application or not.

2. Customer Responsibility related to Specific, in particular Safety-Relevant Applications

It has to be clearly pointed out that the possibility of a malfunction of electronic components or failure before the end of the usual lifetime cannot be completely eliminated in the current state of the art, even if the products are operated within the range of the specifications.
In certain customer applications requiring a very high level of safety and especially in customer applications in which the malfunction or failure of an electronic component could endanger human life or health it must be ensured by most advanced technological aid of suitable design of the customer application that no injury or damage is caused to third parties in the event of malfunction or failure of an electronic component. Therefore, customer is cautioned to verify that data sheets are current before placing orders. The current data sheets can be downloaded at www.we-online.com.

3. Best Care and Attention

Any product-specific notes, cautions and warnings must be strictly observed. Any disregard will result in the loss of warranty.

4. Customer Support for Product Specifications

Some products within the product range may contain substances which are subject to restrictions in certain jurisdictions in order to serve specific technical requirements. Necessary information is available on request. In this case the field sales engineer or the internal sales person in charge should be contacted who will be happy to support in this matter.

5. Product R&D

Due to constant product improvement product specifications may change from time to time. As a standard reporting procedure of the Product Change Notification (PCN) according to the JEDEC-Standard inform about minor and major changes. In case of further queries regarding the PCN, the field sales engineer or the internal sales person in charge should be contacted. The basic responsibility of the customer as per Section 1 and 2 remains unaffected.

6. Product Life Cycle

Due to technical progress and economical evaluation we also reserve the right to discontinue production and delivery of products. As a standard reporting procedure of the Product Termination Notification (PTN) according to the JEDEC-Standard we will inform at an early stage about inevitable product discontinuance. According to this we cannot guarantee that all products within our product range will always be available. Therefore it needs to be verified with the field sales engineer or the internal sales person in charge about the current product availability expectancy before or when the product for application design-in disposal is considered. The approach named above does not apply in the case of individual agreements deviating from the foregoing for customer-specific products.

7. Property Rights

All the rights for contractual products produced by Würth Elektronik eiSos GmbH & Co. KG on the basis of ideas, development contracts as well as models or templates that are subject to copyright, patent or commercial protection supplied to the customer will remain with Würth Elektronik eiSos GmbH & Co. KG. Würth Elektronik eiSos GmbH & Co. KG does not warrant or represent that any license, either expressed or implied, is granted under any patent right, copyright, mask work right, or other intellectual property right relating to any combination, application, or process in which Würth Elektronik eiSos GmbH & Co. KG components or services are used.

8. General Terms and Conditions

Unless otherwise agreed in individual contracts, all orders are subject to the current version of the “General Terms and Conditions of Würth Elektronik eiSos Group”, last version available at www.we-online.com.

RoHS COMPLIANT | REACh COMPLIANT | HALOGEN FREE

WÜRTH ELEKTRONIK MORE THAN YOU EXPECT

Würth Elektronik eiSos GmbH & Co. KG
EMC & Inductive Solutions
Max-Eyth-Str. 1
74638 Waldenburg
Germany
Tel. +49 (0) 79 42 945 - 0
www.we-online.com
eiSos@we-online.com

CHECKED	REVISION	DATE (YYYY-MM-DD)	GENERAL TOLERANCE	PROJECTION METHOD
NFi	008.002	2023-05-15	DIN ISO 2768-1c	

DESCRIPTION
WE-STAR-TEC Snap Ferrite with safety key technology

ORDER CODE
74271112

BUSINESS UNIT	STATUS	PAGE
eiSos	Valid	6/6

This electronic component has been designed and developed for usage in general electronic equipment only. This product is not authorized for use in equipment where a higher safety standard and reliability standard is especially required or where a failure of the product is reasonably expected to cause severe personal injury or death, unless the parties have executed an agreement specifically governing such use. Moreover Würth Elektronik eiSos GmbH & Co KG products are neither designed nor intended for use in areas such as military, aerospace, aviation, nuclear control, submarine, transportation, transportation signal, disaster prevention, medical, public information network etc.. Würth Elektronik eiSos GmbH & Co KG must be informed about the intent of such usage before the design-in stage. In addition, sufficient reliability evaluation checks for safety must be performed on every electronic component which is used in electrical circuits that require high safety and reliability functions or performance.

Product Series	WE-StarTec
Date	2024/11/06
Version	2.1
Released by	Material management

Semi-Component	Material acc. ISO 22628/IMDS	Substances	CAS	Average Mass [%]	Sum [%]
Core	7.2 Ceramics/glass	Iron oxide(Fe2O3)	1309-37-1	66.000	81.4
		Zinc oxide(ZnO)	1314-13-2	19.000	
		Nickel oxide(NiO)	1313-99-1	7.000	
		Copper oxide(CuO)	1317-38-0	5.000	
		Magnesium oxide(MgO)	1309-48-4	2.000	
		Trade secret	N/A	1.000	
Housing	5.1.a filled thermoplastics	Hexanedioic acid, polymer with hexahydro-2H-azepin-2-one and 1,6-hexanediamine	24993-04-2	87.000	18.6
		Melamine cyanurate	37640-57-6	12.000	
		Trade secret	N/A	1.000	

Part list

Type/Size/PartNo	Mass (grams)
74271112	33.1g

Company	Würth Elektronik eiSos GmbH & Co.KG
Address	Max-Eyth-Str. 1 D-74638 Waldenburg
Email	rohs@we-online.com
Internet	www.we-online.com

Disclaimer

The material content knowledge of Würth Elektronik eiSos GmbH & Co. KG is based on third party information of certified and accredited analytical labatories.

As a manufacturerer Würth Elektronik eiSos GmbH & Co.KG has suitable procedures in place to provide appropriate product information.

Not any kind of information according to destructive testing or chemical analysis are issued to be available for release due to the proprietary value of this content.

Though Würth Elektronik eiSos GmbH & Co.KG provides Full Material Declaration (FMD) on request.The FMD exhibits the material substances and weight percentage for the main material of a product as well as the CAS - numbers which classifies each substance used.All other material content information is provided 'as is.'

Compliance Statement according to RoHs directive (2011/65/EU&2015/863)				
Compliance Status	Exemption article	Resticted substance included	Concentration in semi-component(ppm)	Semi-component concerned
PASS	N.A.	N.A.	N.A.	N.A.

Compliance statement according to REACh Art.33 Subsection 1 Substance of very High concerns(SVHC) (1907/2006 (EC)).			
Compliance Status	SVHC substance	SVHC Concentration in Semi-component(ppm)	Semi-component concerned
NO SVHC Present	N.A.	N.A.	N.A.

Compliance statement according to Halogen.		
Compliance Status	Regulation	Requirement
PASS	IEC61249-2-21	1.All PCB laminates within the electronic products shall meet the IEC standard IEC 61249-2-21 and contain <900 ppm chlorine and <900 ppm bromine whereas the overall content must not exceed 1500 ppm, not considering the source.
PASS	JEDEC JS709B	1. The Chlorine content within electronic product material(excluding printed board laminates) must be <1000 ppm (0.1%) if the source is from CFR, PVC, PVC copolymers or PVC block polymers; 2.The Bromine content within electronic product material(excluding printed board laminates) must be<1000 ppm(0.1 %) if the source is from BFR; 3.Higher Concentrations of Chlorine and Bromine within electronic product material(excluding printed board laminates) are allowed as long as their sources are not flame retardants, PVC, PVC copolymers or PVC block polymers; 4.Total Chlorine and Bromine within PCB laminates should be less than 1500ppm, and Chlorine or Bromine should be less than 900ppm, not considering the source.

RoHS TEST REPORT

Report No : A12009302(6) Date : 2024-06-25

Application No : L1207960(3)

Würth Elektronik eiSos GmbH & Co.KG
EMC & Inductive Solutions
Total Quality Management
Ms. Sherry Li/Mr. Yangyang Chen
Max-Eyth-Str.1;
74638 Waldenburg

Conclusion for the test report No. A12009302(6) dated 2024-06-25.

Overall Conclusion according to RoHS
[■] PASSED [ ] FAILED

A12009302(6)

This document is issued subject to the latest CMA Testing General Terms and Conditions of Testing and Inspection Services, available on request or accessible at website www.cmatesting.com.cn.
This document shall not be reproduced except in full without written approval by CMA Testing. The results apply to the sample as received unless otherwise specified. The observations and test results in this report are relevant only to the sample tested. There was no verification on the validity of the information provided by the applicant.

Yubiao Testing and Certification Laboratory (Shenzhen) Limited
Address: 5/F, Block 2, Runheng Electronic Park/Runheng-dingfeng High-tech Industrial Park, Liuxian 2nd Road, Xin'an Subdistrict, Bao'an District, Shenzhen, Guangdong, China.
Tel: (86) 755 8835 0808 Fax: (86)755 8835 1430 E-mail: info.sc@cmatesting.com.cn Web Site: http://www.cmatesting.com.cn

RoHS TEST REPORT

Report No : A12009302(6) Date : 2024-06-25 Page 2 of 7

Application No : L1207960(3)

Würth Elektronik eiSos GmbH & Co.KG
EMC & Inductive Solutions
Total Quality Management
Ms. Sherry Li/Mr. Yangyang Chen
Max-Eyth-Str.1;
74638 Waldenburg

The following sample(s) was/were tested according to RoHS Directive 2011/65/EU and amendment (EU) 2015/863.

Sample Description : One (1) submitted sample(s) stated to be :
Item Name Würth : WE-Star Series_Grey_7427XXX
Item No. Würth : 7427247
Lot No. Würth : 128210432311101
Date Code Würth : 11.04.2024

Date Received : 2024-06-03.

Test Period : 2024-06-03 to 2024-06-25.

Conclusion :

Tested sample	According to standard/ directive	Result
Submitted sample(s)	RoHS Directive 2011/65/EU and amendment (EU) 2015/863	Passed

Test Result : Refer to the result pages for details.

Remark : Passed means that test results shown on the report comply with the limit set by RoHS Directive 2011/65/EU and amendment (EU) 2015/863.

Prepared by : Nemo Xie

Reviewed by : Jack Chen

Approved by : Star Wang

YUBIAO TESTING AND CERTIFICATION LABORATORY (SHENZHEN) LIMITED 检验检测专用章 TESTING & INSPECTION 4403060169760

This document is issued subject to the latest CMA Testing General Terms and Conditions of Testing and Inspection Services, available on request or accessible at website www.cmatesting.com.cn.
This document shall not be reproduced except in full without written approval by CMA Testing. The results apply to the sample as received unless otherwise specified. The observations and test results in this report are relevant only to the sample tested. There was no verification on the validity of the information provided by the applicant.
Yubiao Testing and Certification Laboratory (Shenzhen) Limited
Address: 5/F, Block 2, Runheng Electronic Park/Runheng-dingfeng High-tech Industrial Park, Liuxian 2nd Road, Xin'an Subdistrict, Bao'an District, Shenzhen, Guangdong, China.
Tel: (86) 755 8835 0808 Fax: (86)755 8835 1430 E-mail: info.sc@cmatesting.com.cn Web Site: http://www.cmatesting.com.cn

RoHS TEST REPORT

Report No : A12009302(6) Date : 2024-06-25

Application No : L1207960(3)

Sample Description : Item Name Würth : WE-Star Series_Grey_7427XXX
Item No. Würth : 7427247
Lot No. Würth : 128210432311101
Date Code Würth : 11.04.2024

Material Description

Material ID	Material No.	Description
712&496	1	Grey plastic
-	2	Black plastic
125	3	Black metal magnet

Sample Photo(s)

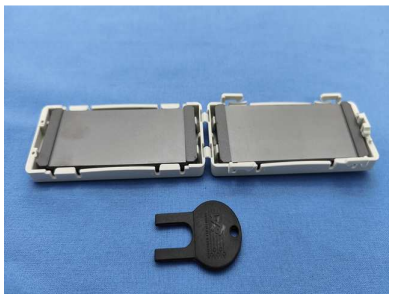

Overview



Material No. 1



Material No. 2



Material No. 3

This document is issued subject to the latest CMA Testing General Terms and Conditions of Testing and Inspection Services, available on request or accessible at website www.cmatesting.com.cn.
This document shall not be reproduced except in full without written approval by CMA Testing. The results apply to the sample as received unless otherwise specified. The observations and test results in this report are relevant only to the sample tested. There was no verification on the validity of the information provided by the applicant.
Yubiao Testing and Certification Laboratory (Shenzhen) Limited
Address: 5/F, Block 2, Runheng Electronic Park/Runheng-dingfeng High-tech Industrial Park, Liuxian 2nd Road, Xin'an Subdistrict, Bao'an District, Shenzhen, Guangdong, China.
Tel: (86) 755 8835 0808 Fax: (86)755 8835 1430 E-mail: info.sc@cmatesting.com.cn Web Site: http://www.cmatesting.com.cn

RoHS TEST REPORT

Report No : A12009302(6) Date : 2024-06-25

Application No : L1207960(3)

Sample Description : Item Name Würth : WE-Star Series_Grey_7427XXX
Item No. Würth : 7427247
Lot No. Würth : 128210432311101
Date Code Würth : 11.04.2024

Test Method:

As specified by client, to screen the Lead(Pb), Mercury(Hg), Cadmium(Cd), Chromium(Cr) and Bromine(Br) by XRF spectroscopy, further chemical method must be applied once the result is over the screening limit

Test Item	Test method	Reporting Limit (mg/kg)		Screening Limit (mg/kg)	
		Polymers	Others	Polymers	Others
Lead (Pb)	IEC 62321-3-1:2013	100		100	
Mercury (Hg)	IEC 62321-3-1:2013	100		100	
Cadmium (Cd)	IEC 62321-3-1:2013	30	50	30	50
Chromium (Cr)	IEC 62321-3-1:2013	300		300	
Bromine (Br)	IEC 62321-3-1:2013	250		250	

Test Item	Pretreatment method	Test instrument	MDL
Lead (Pb)	IEC 62321-5 : 2013	ICP-OES/ AAS	2 mg/kg
Cadmium (Cd)	IEC 62321-5 : 2013	ICP-OES/ AAS	2 mg/kg
Mercury (Hg)	IEC 62321-4 : 2013 + AMD1:2017	ICP-OES	2 mg/kg
Chromium(VI) [Cr(VI)]**	IEC 62321-7-1 : 2015	UV-VIS	/
Chromium(VI) [Cr(VI)]	IEC 62321-7-2 : 2017	UV-VIS	8 mg/kg
Polybrominatedbiphenyla (PBBs)	IEC 62321-6 : 2015	GC-MS	50 mg/kg
Polybrominateddiphenylethers (PBDEs)	IEC 62321-6 : 2015	GC-MS	50 mg/kg
DibutylPhthalate (DBP)	IEC 62321-8 : 2017	GC-MS	30 mg/kg
BenzylbutylPhthalate (BBP)	IEC 62321-8 : 2017	GC-MS	30 mg/kg
Bis (2-ethylhexyl) phthalate (DEHP)	IEC 62321-8 : 2017	GC-MS	30 mg/kg
DiisobutylPhthalate (DIBP)	IEC 62321-8 : 2017	GC-MS	30 mg/kg

Test Item	MDL (μg/cm^2)	Cr(VI) concentration (μg/cm^2)	Result
Cr(VI) **	0.02	<0.10	Negative
		0.10~0.13	Inconclusive
		>0.13	Positive

Note :
- MDL = Method Detection Limit; ** denotes Boiling water extraction
- Storage conditions and production date of the tested sample are unavailable and thus results of Cr(VI) represent status of the sample at the time of testing.

This document is issued subject to the latest CMA Testing General Terms and Conditions of Testing and Inspection Services, available on request or accessible at website www.cmatesting.com.cn.
This document shall not be reproduced except in full without written approval by CMA Testing. The results apply to the sample as received unless otherwise specified. The observations and test results in this report are relevant only to the sample tested. There was no verification on the validity of the information provided by the applicant.
Yubiao Testing and Certification Laboratory (Shenzhen) Limited
Address: 5/F, Block 2, Runheng Electronic Park/Runheng-dingfeng High-tech Industrial Park, Liuxian 2nd Road, Xin'an Subdistrict, Bao'an District, Shenzhen, Guangdong, China.
Tel: (86) 755 8835 0808 Fax: (86)755 8835 1430 E-mail: info.sc@cmatesting.com.cn Web Site: http://www.cmatesting.com.cn

RoHS TEST REPORT

Report No : A12009302(6) Date : 2024-06-25

Application No : L1207960(3)

Sample Description : Item Name Würth : WE-Star Series_Grey_7427XXX
Item No. Würth : 7427247
Lot No. Würth : 128210432311101
Date Code Würth : 11.04.2024

Test Result:

Material ID	Material No.	Test item	Limits (mg/kg)	Test results (mg/kg)	Remark
712&496	1	Pb	1000	ND	-
		Cd	100	ND	
		Hg	1000	ND	
		Cr(VI)	1000	ND	
		PBBs	1000	ND	
		PBDEs	1000	ND	
		DBP#	1000	ND	
		BBP#	1000	ND	
		DEHP#	1000	ND	
		DIBP#	1000	ND	
-	2	Pb	1000	ND	-
		Cd	100	ND	
		Hg	1000	ND	
		Cr(VI)	1000	ND	
		PBBs#	1000	ND	
		PBDEs#	1000	ND	
		DBP#	1000	ND	
		BBP#	1000	ND	
		DEHP#	1000	ND	
		DIBP#	1000	ND	
125	3	Pb	1000	ND	-
		Cd	100	ND	
		Hg	1000	ND	
		Cr(VI)	1000	ND	
		PBBs	1000	NA	
		PBDEs	1000	NA	
		DBP	1000	NA	
		BBP	1000	NA	
		DEHP	1000	NA	
		DIBP	1000	NA	

This document is issued subject to the latest CMA Testing General Terms and Conditions of Testing and Inspection Services, available on request or accessible at website www.cmatesting.com.cn.
This document shall not be reproduced except in full without written approval by CMA Testing. The results apply to the sample as received unless otherwise specified. The observations and test results in this report are relevant only to the sample tested. There was no verification on the validity of the information provided by the applicant.
Yubiao Testing and Certification Laboratory (Shenzhen) Limited
Address: 5/F, Block 2, Runheng Electronic Park/Runheng-dingfeng High-tech Industrial Park, Liuxian 2nd Road, Xin'an Subdistrict, Bao'an District, Shenzhen, Guangdong, China.
Tel: (86) 755 8835 0808 Fax: (86)755 8835 1430 E-mail: info.sc@cmatesting.com.cn Web Site: http://www.cmatesting.com.cn

RoHS TEST REPORT

Report No : A12009302(6) Date : 2024-06-25

Application No : L1207960(3)

Sample Description : Item Name Würth : WE-Star Series_Grey_7427XXX
Item No. Würth : 7427247
Lot No. Würth : 128210432311101
Date Code Würth : 11.04.2024

Note :
- mg/kg (milligram per kilogram) = ppm (part per million by weight)
- ND = Not Detected (less than MDL for the Chemical test or less than Screening Limit for XRF); NA = Not Applicable; -- = Not Required
- # = Chemical test

RoHS Requirements

Restricted substances	Limits
Lead (Pb)	0.1% (1000 ppm)
Cadmium (Cd)	0.01% (100 ppm)
Mercury (Hg)	0.1% (1000 ppm)
Chromium(VI) [Cr(VI)]	0.1% (1000 ppm)
Polybrominatedbiphenyla (PBBs)	0.1% (1000 ppm)
Polybrominateddiphenylethers (PBDEs)	0.1% (1000 ppm)
DibutylPhthalate (DBP)	0.1% (1000 ppm)
BenzylbutylPhthalate (BBP)	0.1% (1000 ppm)
Bis (2-ethylhexyl) phthalate (DEHP)	0.1% (1000 ppm)
DiisobutylPhthalate (DIBP)	0.1% (1000 ppm)

This document is issued subject to the latest CMA Testing General Terms and Conditions of Testing and Inspection Services, available on request or accessible at website www.cmatesting.com.cn.
This document shall not be reproduced except in full without written approval by CMA Testing. The results apply to the sample as received unless otherwise specified. The observations and test results in this report are relevant only to the sample tested. There was no verification on the validity of the information provided by the applicant.
Yubiao Testing and Certification Laboratory (Shenzhen) Limited
Address: 5/F, Block 2, Runheng Electronic Park/Runheng-dingfeng High-tech Industrial Park, Liuxian 2nd Road, Xin'an Subdistrict, Bao'an District, Shenzhen, Guangdong, China.
Tel: (86) 755 8835 0808 Fax: (86)755 8835 1430 E-mail: info.sc@cmatesting.com.cn Web Site: http://www.cmatesting.com.cn

RoHS TEST REPORT

Report No : A12009302(6) Date : 2024-06-25

Application No : L1207960(3)

Testing Flow Chart

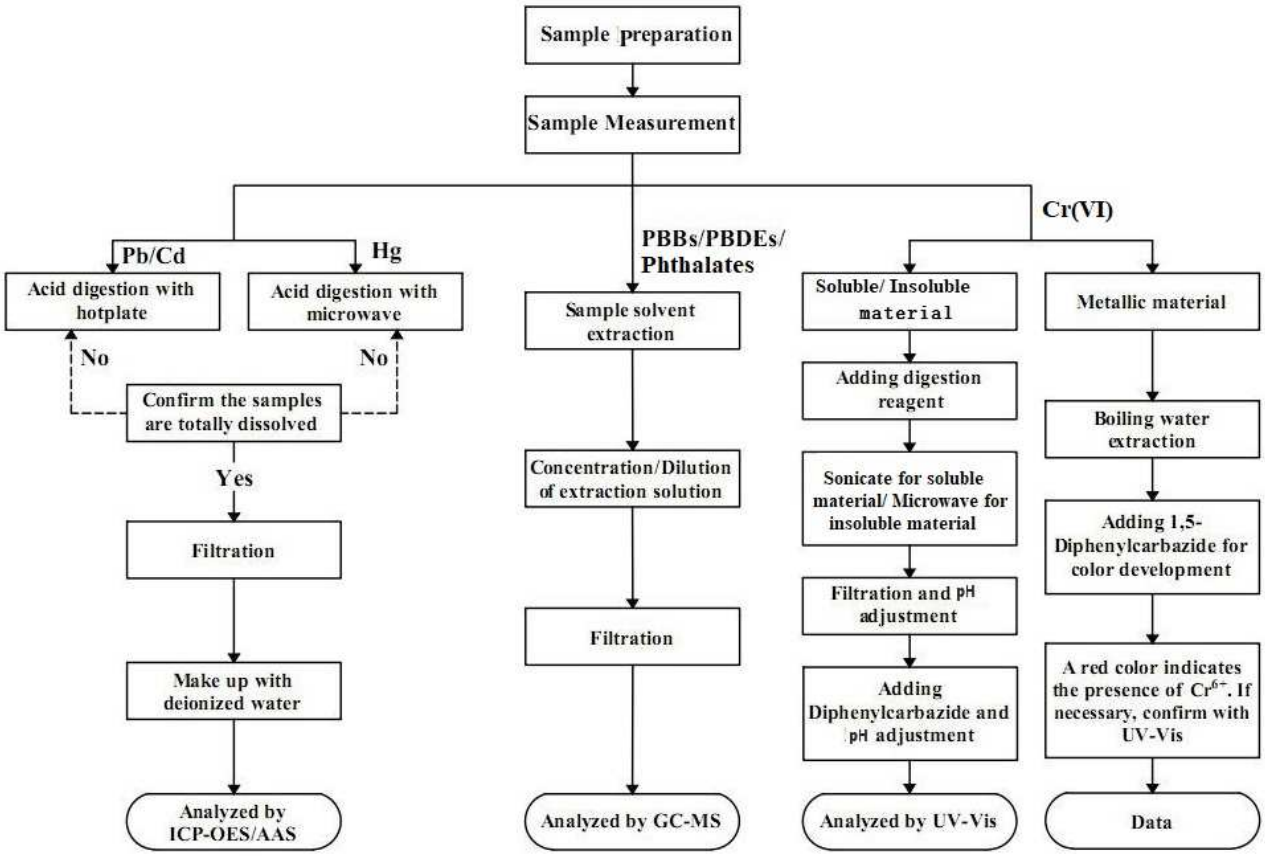

Remark for Test Report:

1. The report is invalid without the signature of approver, special seal for inspection and testing and the seal on the perforation.
2. Test results in this report are only valid for the submitted test samples. For the irreproducible test items or samples, the test results are only related with the submitted test in the as received state and conditions.
3. The submitted samples, sample information and client information are provided by the applicant. There is no verification on the validity of such information.
4. This test report could not be reproduced or partially reproduced without the written confirmation of Yubiao Testing and Certification Laboratory (Shenzhen) Limited.

***** End of Report *****

This document is issued subject to the latest CMA Testing General Terms and Conditions of Testing and Inspection Services, available on request or accessible at website www.cmatesting.com.cn. This document shall not be reproduced except in full without written approval by CMA Testing. The results apply to the sample as received unless otherwise specified. The observations and test results in this report are relevant only to the sample tested. There was no verification on the validity of the information provided by the applicant.
Yubiao Testing and Certification Laboratory (Shenzhen) Limited
Address: 5/F, Block 2, Runheng Electronic Park/Runheng-dingfeng High-tech Industrial Park, Liuxian 2nd Road, Xin'an Subdistrict, Bao'an District, Shenzhen, Guangdong, China.
Tel: (86) 755 8835 0808 Fax: (86)755 8835 1430 E-mail: info.sc@cmatesting.com.cn Web Site: http://www.cmatesting.com.cn

Würth Elektronik eiSos GmbH & Co. KG
EMC & Inductive Solutions
Max-Eyth-Straße 1 · 74638 Waldenburg · Germany
Tel. +49 7942 945-0 · Fax +49 7942 945-5000
eiSos@we-online.com · www.we-online.com

WÜRTH ELEKTRONIK MORE THAN YOU EXPECT

14th October 2024

Statement in light of the REACh Regulation (EC) No. 1907/2006

On 1st June 2007 Regulation (EC) No. 1907/2006 concerning the Registration, Evaluation, Authorization and Restriction of Chemicals ("REACh" for short) came into force, with the purpose of managing substances on their own, in mixtures and in articles and to promote the search for alternatives to hazardous substances. Obligations regarding "Articles" were regulated afterwards as following:

1. According to Art. 7 "Registration and Notification of substances in articles":

A. Since 1st June 2008, any producer or importer of articles shall submit a registration to the European Chemical Agency (ECHA) for any substance contained in those articles, if

- the substance is intended to be released under normal or reasonably foreseeable conditions of use and
- the substance is placed into European Community in quantities over 1 ton per producer or importer per year and
- the substance hasn't been registered yet for the same use.

B. Since 1st June 2011, any producer or importer of articles shall notify the ECHA of the substance´s name, classification and use, etc, if

- a substance contained in these articles is a Substance Very High Concern (SVHC) and
- the substance is present in these articles above a concentration of 0.1% weight by weight and
- the total quantity of the substance is over 1 ton per producer or importer per year and
- the substance hasn't been registered for the same use.

2. According to Art. 33 "Duty to communicate information on substance in articles":

Suppliers, manufacturers and importers of articles that contain a substance on the "candidate list" in a concentration above 0.1% weight by weight shall provide the recipient and on request a consumer of the article with sufficient information to ensure safe use of the article including, as a minimum, the name of that substance.

Following up the latest update the Waste Framework Directive (EU)2018/851 asks Companies, that produce, import or supply articles containing SVHCs in a concentration above 0.1% weight by weight (w/w), to submit information on articles placed on the EU market to the SCIP database (Substance of Concern in Product). This obligation is valid from the 5th of January 2021 to make this information available to waste treatment operators and consumers, to promote the reduction of generation of waste containing hazardous substances by supporting the substitution of substances of concern in articles placed on the EU market.

3. According to Art. 56 "General Provision regarding Authorization Requirement":

A manufacturer, importer or downstream user shall not place substances under the "authorization list" on the market until the authorization for its use has been granted.

Würth Elektronik eiSos GmbH & Co. KG Sitz Waldenburg, Registergericht Stuttgart HRA 580801
Komplementär Würth Elektronik eiSos Verwaltungs-GmbH, Sitz Waldenburg, Registergericht Stuttgart HRB 581033
Geschäftsführer Thomas Garz, Alexander Gerfer, Dirk Knorr, Josef Wörner
Bankverbindung UniCredit Bank AG Stuttgart, Konto 322 620 136, BLZ 600 202 90, IBAN DE86 6002 0290 0322 6201 36, SWIFT/BIC HYVEDEMM473
USt.-IdNr. DE220618976

Würth Elektronik eiSos GmbH & Co. KG
EMC & Inductive Solutions
Max-Eyth-Straße 1 · 74638 Waldenburg · Germany
Tel. +49 7942 945-0 · Fax +49 7942 945-5000
eiSos@we-online.com · www.we-online.com

WÜRTH ELEKTRONIK MORE THAN YOU EXPECT

4. According to Art. 67 "General Provisions regarding Restrictions on the manufacturing, placing on the market and use of certain dangerous substances, preparations and articles":

A substance on its own, in a preparation or in an article, for which Annex XVII contains a restriction shall not be manufactured, placed on the market or used unless it complies with the conditions of that restriction.

Würth Elektronik eiSos GmbH & Co. KG (WE eiSos), as a manufacturer of electronic components, has been aware of the above obligations and have evaluated our products according to our current knowledge. We hereby inform you, that our products, as complex articles, are subject to the obligation in accordance with Article 33, 56 and 67 of REACh (EC) No. 1907\2006.

As a result of the evaluation between 241 substances which became part of the list on 27th June 2024 and our products we inform our customers that based on our current knowledge and belief Würth Electronik eiSos products do not contain any Substances of Very High Concern (SVHC) over the threshold of 0.1% weight by weight (w/w) excluding the products listed in below link:

Part List Containing SVHC

In order to fulfil our obligation to communicate this information with our customers the link above shows as well the SCIP numbers for articles containing SVHC. The list might not be exhaustive but is under continuously update.

Furthermore, our products are compliant with Annex XIV & XVII according to the REACh Regulation as well.

In addition to make the data transparent in the list, we continue to cooperate with our productions to look for ways to reduce and eliminate the use of these SVHC. Any further information will be posted timely.

You can find additional information about the candidate list on the European Chemical Agency's homepage through following website:

http://echa.europa.eu/candidate-list-table

The latest version of this statement can always be found in the Download Center of our Homepage under the category "Material Compliance": www.we-online.de/DownloadCenter

i.A. M. Weser

Michael Weser

Head of Quality Management

i.A. Sherry Li

Sherry Li

Material Management

Disclaimer

The material content knowledge of Würth Elektronik eiSos GmbH & Co. KG is based on third party information of certified and accredited analytical laboratories. As a manufacturer Würth Elektronik eiSos GmbH & Co. KG has suitable procedures in place to provide appropriate product information, but Würth Elektronik eiSos cannot guarantee the accuracy and completeness of all data. Unless otherwise declared, all data is provided "as is". The information can be used by the interested parties as a reference for their product compliance assessment. Würth Elektronik can´t be held liable for any damages and losses.

Würth Elektronik eiSos GmbH & Co. KG Sitz Waldenburg, Registergericht Stuttgart HRA 580801
Komplementär Würth Elektronik eiSos Verwaltungs-GmbH, Sitz Waldenburg, Registergericht Stuttgart HRB 581033
Geschäftsführer Thomas Garz, Alexander Gerfer, Dirk Knorr, Josef Wörner
Bankverbindung UniCredit Bank AG Stuttgart, Konto 322 620 136, BLZ 600 202 90, IBAN DE86 6002 0290 0322 6201 36, SWIFT/BIC HYVEDEMM473
USt.-IdNr. DE220618976

Würth Elektronik eiSos GmbH & Co. KG
EMC & Inductive Solutions
Max-Eyth-Straße 1 · 74638 Waldenburg · Germany
Tel. +49 7942 945-0 · Fax +49 7942 945-5000
eiSos@we-online.com · www.we-online.com

WÜRTH ELEKTRONIK MORE THAN YOU EXPECT

08. February 2024

Certificate of Compliance for Directive 2011/65/EU

This document certifies that Sub-components and homogeneous material used in electronic products manufactured by Würth Elektronik eiSos GmbH & Co.KG (Hereinafter called "WE eiSos") do not contain the substances, which are listed in Annex II of the Directive 2011/65/EU and the amendment of Directive 2015/863 of the European Parliament on the Restriction of the Use of Certain Hazardous Substances (RoHS) in Electrical and Electronic Equipment (hereinafter called "EEE"), except for listed products in the following list using exemptions according to Annex IV.

Part List EU RoHS Exemptions

WE eiSos has been continuously assessing the concentration of restricted substances in sub-components and homogenous material in accordance with the harmonized standard IEC 63000 on a regular basis, including collecting FMDs and Compliance Declarations, setting up contractually bound with our suppliers, doing compliance analysis, material change re-assessment, etc.

WE eiSos produces mainly electronic components. For electronic components, since they are not placed or made available directly on the market for consumers and end-customers, they are not bound to labelling obligations according to Article 7 of Directive 2011/65/EU. On request of any government agency, WE eiSos will provide necessary documents, which verify the compliance to Directive 2011/65/EU based on harmonized standards.

The latest version of this document can be found as always on our Homepage.

i.A. Sherry Li
Sherry Li
Material Management

i.A. M. Weser
Michael Weser
Head of Quality Management

Disclaimer
The material content knowledge of Würth Elektronik eiSos GmbH & Co. KG is based on third party information of certified and accredited analytical laboratories. As a manufacturer Würth Elektronik eiSos GmbH & Co. KG has suitable procedures in place to provide appropriate product information, but Würth Elektronik eiSos cannot guarantee the accuracy and completeness of all data. Unless otherwise declared, all data is provided "as is". The information can be used by the interested parties as a reference for their product compliance assessment. Würth Elektronik can´t be held liable for any damages and losses.

Würth Elektronik eiSos GmbH & Co. KG Sitz Waldenburg, Registergericht Stuttgart HRA 580801
Komplementär Würth Elektronik eiSos Verwaltungs-GmbH, Sitz Waldenburg, Registergericht Stuttgart HRB 581033
Geschäftsführer Thomas Schrott, Alexander Gerfer, Thomas Wild, Dirk Knorr, Josef Wörner
Bankverbindung UniCredit Bank AG Stuttgart, Konto 322 620 136, BLZ 600 202 90, IBAN DE86 6002 0290 0322 6201 36, SWIFT/BIC HYVEDEMM473
USt.-IdNr. DE220618976