MMSZ5221B-HF Thru. MMSZ5267B-HF

RoHS Device
Halogen Free

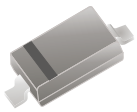

Features

- Large selection of zener voltages: 2.4V~75V.
- Tight voltage tolerance: ±5% for B-series.
- Ultra low-profile package well suited for automated assembly.
- MSL class 1 compatible.

SOD-123

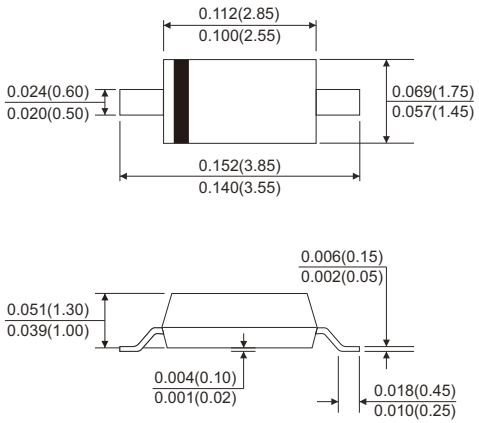

Dimensions in inches and (millimeter)

Mechanical data

- Case: Molded plastic, SOD-123
- Molding compound: UL flammability classification rating 94V-0.
- Terminals: Tin-plated; solderaility per MIL-STD-202, method 208.

Circuit Diagram



Maximum Ratings (TA=25°C unless otherwise noted)

Parameter	Symbol	Value	Unit
Forward voltage @ IF=10mA	VF	0.9	V
Power dissipation (collector)	PC	500	mW
Thermal resistance, junction to ambient	RθJA	250	°C/W
Thermal resistance, junction to case	RθJC	140	°C/W
Junction temperature range	TJ	-55 to +150	°C
Storage temperature range	TSTG	-65 to +150	°C

Note: 1. These ratings are limiting values above which the serviceability of the diodes may be impaired.

Electrical Characteristics (TA=25°C unless otherwise noted)

Part Number	Zener Voltage Range			Test Current	Maximum Zener Impedance		Maximum Reverse Leakage Current		Marking Code
	VZ @ IZT			IZT	ZZT @ IZT	ZZK @ IZK=0.25mA	IR @ VR		
	Min(V)	Typ(V)	Max(V)	(mA)	(Ω)	(Ω)	(μA)	(V)	
MMSZ5221B-HF	2.28	2.4	2.52	20	30	1200	100	1.0	C1
MMSZ5223B-HF	2.57	2.7	2.84	20	30	1300	75	1.0	C3
MMSZ5225B-HF	2.85	3.0	3.15	20	30	1600	50	1.0	C5
MMSZ5226B-HF	3.14	3.3	3.47	20	28	1600	25	1.0	G1
MMSZ5227B-HF	3.42	3.6	3.78	20	24	1700	15	1.0	G2
MMSZ5228B-HF	3.71	3.9	4.10	20	23	1900	10	1.0	G3
MMSZ5229B-HF	4.09	4.3	4.52	20	22	2000	5.0	1.0	G4
MMSZ5230B-HF	4.47	4.7	4.94	20	19	1900	5.0	2.0	G5
MMSZ5231B-HF	4.85	5.1	5.36	20	17	1600	5.0	2.0	E1
MMSZ5232B-HF	5.32	5.6	5.88	20	11	1600	5.0	3.0	E2
MMSZ5233B-HF	5.70	6.0	6.30	20	7	1600	5.0	3.5	E3
MMSZ5234B-HF	5.89	6.2	6.51	20	7	1000	5.0	4.0	E4
MMSZ5235B-HF	6.46	6.8	7.14	20	5	750	3.0	5.0	E5
MMSZ5236B-HF	7.13	7.5	7.88	20	6	500	3.0	6.0	F1
MMSZ5237B-HF	7.79	8.2	8.61	20	8	500	3.0	6.5	F2
MMSZ5238B-HF	8.27	8.7	9.14	20	8	600	3.0	6.5	F3
MMSZ5239B-HF	8.65	9.1	9.56	20	10	600	3.0	7.0	F4
MMSZ5240B-HF	9.50	10	10.50	20	17	600	3.0	8.0	F5
MMSZ5241B-HF	10.45	11	11.55	20	22	600	2.0	8.4	H1
MMSZ5242B-HF	11.40	12	12.60	20	30	600	1.0	9.1	H2
MMSZ5243B-HF	12.35	13	13.65	9.5	13	600	0.5	9.9	H3
MMSZ5244B-HF	13.30	14	14.70	9.0	15	600	0.1	10	H4
MMSZ5245B-HF	14.25	15	15.75	8.5	16	600	0.1	11	H5
MMSZ5246B-HF	15.20	16	16.80	7.8	17	600	0.1	12	J1
MMSZ5247B-HF	16.15	17	17.85	7.5	19	600	0.1	13	J2
MMSZ5248B-HF	17.10	18	18.90	7.0	21	600	0.1	14	J3
MMSZ5250B-HF	19.00	20	21.00	6.2	25	600	0.1	15	J5
MMSZ5251B-HF	20.90	22	23.10	5.6	29	600	0.1	17	K1
MMSZ5252B-HF	22.80	24	25.20	5.2	33	600	0.1	18	K2
MMSZ5253B-HF	23.75	25	26.25	5.0	35	600	0.1	19	K3

Electrical Characteristics (T_A=25°C unless otherwise noted)

Part Number	Zener Voltage Range			Test Current	Maximum Zener Impedance		Maximum Reverse Leakage Current		Marking Code
	V_Z @ I_{ZT}			I_{ZT}	Z_{ZT} @ I_{ZT}	Z_{ZK} @ I_{ZK}=0.25mA	I_R @ V_R		
	Min(V)	Typ(V)	Max(V)	(mA)	(Ω)	(Ω)	(μA)	(V)	
MMSZ5254B-HF	25.65	27	28.35	5.0	41	600	0.1	21	K4
MMSZ5255B-HF	26.60	28	29.40	4.5	44	600	0.1	21	K5
MMSZ5256B-HF	28.50	30	31.50	4.2	49	600	0.1	23	M1
MMSZ5257B-HF	31.35	33	34.65	3.8	58	700	0.1	25	M2
MMSZ5258B-HF	34.20	36	37.80	3.4	70	700	0.1	27	M3
MMSZ5259B-HF	37.05	39	40.95	3.2	80	800	0.1	30	M4
MMSZ5260B-HF	40.85	43	45.15	3.0	93	900	0.1	33	M5
MMSZ5261B-HF	44.65	47	49.35	2.7	105	1000	0.1	36	N1
MMSZ5262B-HF	48.45	51	53.55	2.5	125	1100	0.1	39	N2
MMSZ5263B-HF	53.20	56	58.80	2.2	150	1300	0.1	43	M8
MMSZ5265B-HF	58.90	62	65.10	2.0	185	1400	0.1	47	N5
MMSZ5267B-HF	71.25	75	78.75	1.7	270	1700	0.1	56	P2

Rating and Characteristic Curves (MMSZ5221B-HF Thru. MMSZ5267B-HF)

Fig.1 - Power Dissipation vs Ambient Temperature

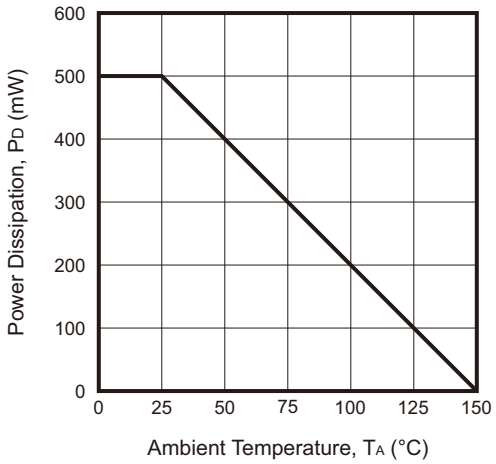

Fig.2 - Typical Capacitance

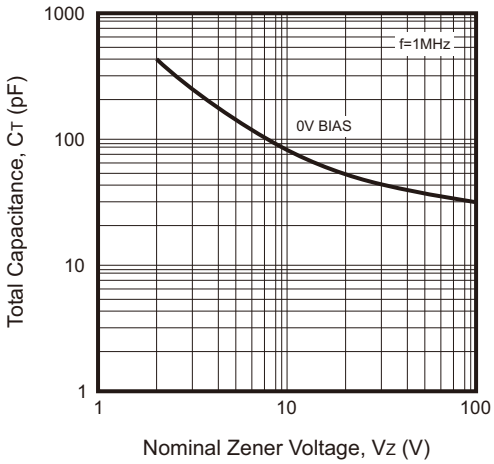

Fig.3 - Zener Breakdown Characteristics

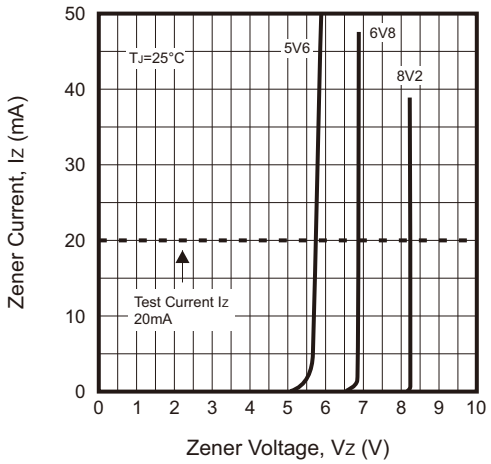

Fig.4 - Zener Breakdown Characteristics

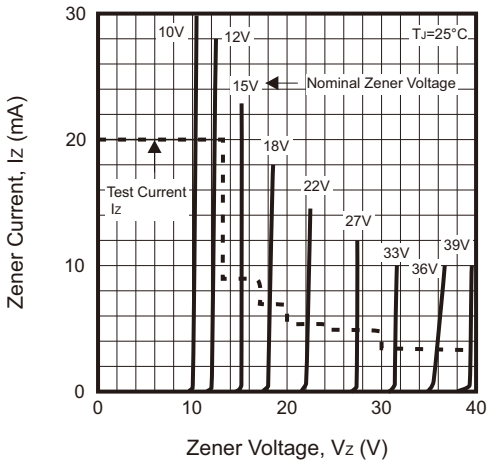

Reel Taping Specification

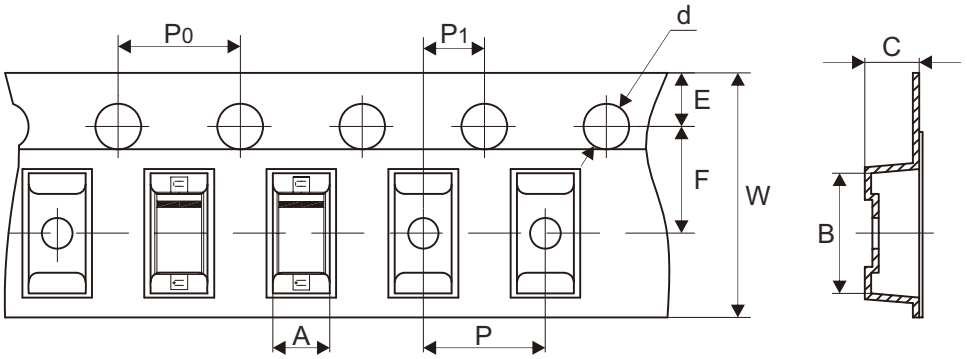

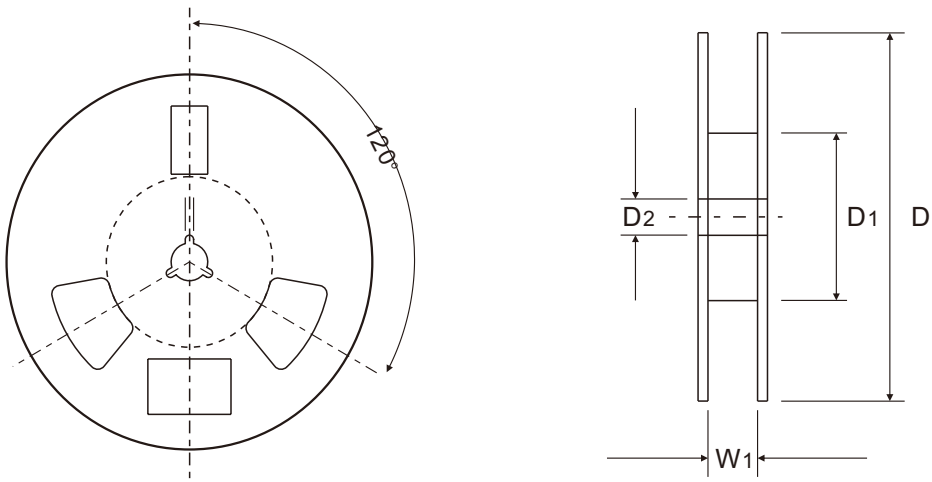

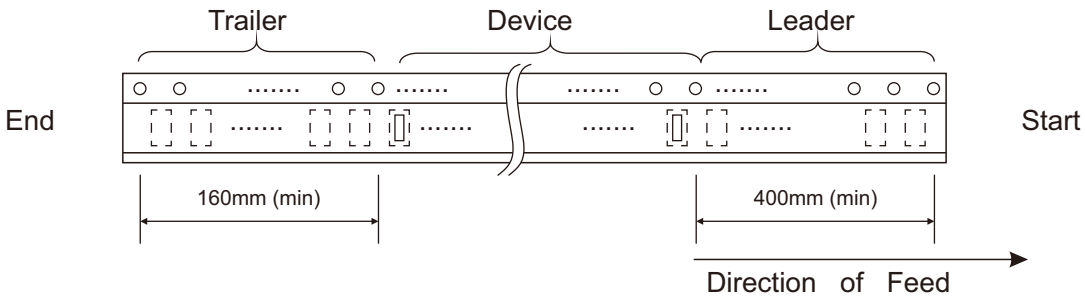

	SYMBOL	A	B	C	d	D	D_1	D_2
SOD-123	(mm)	1.85 ± 0.10	3.94 ± 0.10	1.57 ± 0.10	1.55 ± 0.05	178.00 ± 1.00	54.00 ± 0.50	13.00 ± 0.50
	(inch)	0.073 ± 0.004	0.155 ± 0.004	0.062 ± 0.004	0.061 ± 0.002	7.008 ± 0.039	2.126 ± 0.020	0.512 ± 0.020

	SYMBOL	E	F	P	P_1	P_0	W	W_1
SOD-123	(mm)	1.75 ± 0.10	3.50 ± 0.05	4.00 ± 0.10	2.00 ± 0.05	4.00 ± 0.10	8.00 + 0.30 − 0.10	9.50 ± 1.00
	(inch)	0.069 ± 0.004	0.138 ± 0.002	0.157 ± 0.004	0.079 ± 0.002	0.157 ± 0.004	0.315 + 0.012 − 0.004	0.374 ± 0.039

Company reserves the right to improve product design , functions and reliability without notice.

Marking Code

Part Number	Marking Code
MMSZ5221B-HF Thru. MMSZ5267B-HF	See Page 2~3



XX = Product type marking code

▌ = Cathode band

Suggested PAD Layout

SIZE	SOD-123	
	(mm)	(inch)
A	2.36	0.093
B	0.91	0.036
C	1.22	0.048
D	4.19	0.165

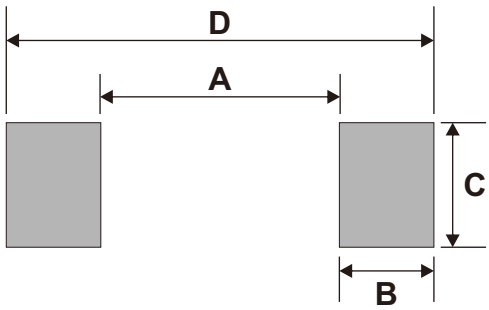

Note: 1.The pad layout is for reference purposes only.

Standard Packaging

Case Type	REEL PACK	
	REEL (pcs)	Reel Size (inch)
SOD-123	3,000	7