Product Specification

(V) Final Specification

Module	21.5” Color TFT-LCD
Model Name	AR215A02.0 (G215HAN01.2) 3TFTLCDL070(T0127)

Customer	**Date**	**Approved by**	**Date**
		Thomas Hung	*2024/10.04*
Approved by	設計驗證 工程課 2024-11-07 發行 宏緯科技開發股份有限公司	**Prepared by**	

Note: This Specification is subject to change without notice.

ARES Optronics corporation

Contents

1.0 Handling Precautions 5
2.0 General Description 6
2.1 Display Characteristics 6
2.2 Optical Characteristics 7
3.0 Functional Block Diagram 10
4.0 Absolute Maximum Ratings 11
4.1 TFT LCD Module 11
4.2 Absolute Ratings of Environment 11
5.0 Electrical characteristics 12
5.1 TFT LCD Module 12
5.1.1 Power Specification 12
5.1.2 Signal Electrical Characteristics 13
5.2 Backlight Unit 14
6.0 Signal Characteristic 15
6.1 Pixel Format Image 15
6.2 The input data format 16
6.3 Signal Description 17
6.4 Timing Characteristics 19
6.5 Timing diagram 20
6.6 Power ON/OFF Sequence 21
7.0 Connector & Pin Assignment 22
7.1 TFT LCD Module 22
7.2 LED Backlight Unit: LED Driver Connector 23
7.3 LED Driver Connector Pin Assignment 23
8.0 Reliability Test 25
9.0 Shipping Label & Packaging 26
9.1 Shipping Label 26
9.2 Packaging 27
9.3 Palletizing 27
10.0 Mechanical Characteristics 28
11 Safety 30
11.1 Sharp Edge Requirements 30
11.2 Materials 30
11.3 Capacitors 30
11.4 National Test Lab Requirement 30

Confidential

Record of Revision

Version & Date	Page	Old description	New Description
0.0 / 2017/10/17			Preliminary Specification
1.0 2018/4/12	12	**5.1.2 Signal Electrical Characteristics** Input signals shall be low or HI-Z state when VDD is off. Please refer to specifications of SN75LVDS82DGG (Texas Instruments) in detail. Characteristics of each signal are as follows: Symbol / Parameter / Min. / Typ. / Max. / Units. / Condition VTH. / Differential Input High Threshold. / 100. / . / . / [mV]. / VICM = 1.2V *Note 1*. VTL. / Differential Input Low Threshold. / . / . / -100. / [mV]. / VICM = 1.2V *Note 1*. |VID|. / Input Differential Voltage. / 100. / 400. / 600. / [mV]. / *Note 1*. VICM. / Differential Input Common Mode Voltage. / 1.0. / 1.2. / 1.5. / [V]. / VTH-VTL = 200MV (max). *Note 1*.	**5.1.2 Signal Electrical Characteristics** Input signals shall be low or Hi-Z state when VDD is off. Please refer to specifications of SN75LVDS82DG (Texas Instruments) in detail. Characteristics of each signal are as follows: Symbol / Parameter / Min. / Typ. / Max. / Units. / Condition VTH. / Differential Input High Threshold. / . / . / 100. / [mV]. / VICM = 1.2V *Note 1*. VTL. / Differential Input Low Threshold. / -100. / . / . / [mV]. / VICM = 1.2V *Note 1*. |VID|. / Input Differential Voltage. / 100. / 400. / 600. / [mV]. / *Note 1*. VICM. / Differential Input Common Mode Voltage. / 1.0. / 1.2. / 1.5. / [V]. / VTH-VTL = 200MV (max). *Note 1*.
1.0 2018/4/12	1	Preliminary Specification	**Final Specification**
1.1 2018/4/23	26	**9.3 Palletizing** Box stacked By air_max : (2 *3) *3 layers , one pallet put 18 boxes , total 144 pcs module By sea_max : (2 *3) *3 layers + (2 *3) *1 layers ,total 192 pcs module By sea_HQ_max : (2 *3) *3 layers+(2 *3) *2 layers, total 240 pcs module 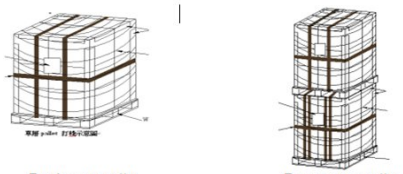 By air : one pallet By sea : two pallet	**9.3 Palletizing** Box stacked Module by air : (2 *4) *3 layers , one pallet put 18 boxes , total 144pcs module Module by sea : One pallet (2 *4 *3 layers) No Double Pallet , total 192 pcs module Module by sea_ HQ : One pallet (2 *4 *3 layers) No Double Pallet Total 192 pcs module 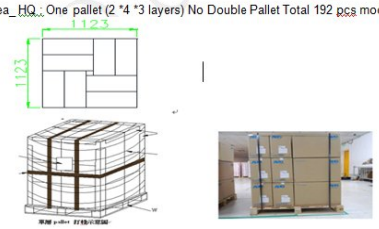 By air / By sea : one pallet
1.1 2024/10/04			Add AR Film on surfaece
1.1 2024/10/08			Add AR Film Spec. at last page

1.0 Handling Precautions

1) Since front polarizer is easily damaged, pay attention not to scratch it.
2) Be sure to turn off power supply when inserting or disconnecting from input connector.
3) Wipe off water drop immediately. Long contact with water may cause discoloration or spots.
4) When the panel surface is soiled, wipe it with absorbent cotton or other soft cloth.
5) Since the panel is made of glass, it may break or crack if dropped or bumped on hard surface.
6) Since CMOS LSI is used in this module, take care of static electricity and insure human earth when handling.
7) Do not open or modify the Module Assembly.
8) Do not press the reflector sheet at the back of the module to any directions.
9) In case if a Module has to be put back into the packing container slot after it was taken out from the container, do not press the center of LED lightbar edge. Instead, press at the far ends of the LED light bar edge softly. Otherwise the TFT Module may be damaged.
10) At the insertion or removal of the Signal Interface Connector, be sure not to rotate nor tilt the Interface Connector of the TFT Module.
11) After installation of the TFT Module into an enclosure, do not twist nor bend the TFT Module even momentarily. While designing the enclosure, it should be taken into consideration that no bending/twisting forces are applied to the TFT Module from outside. Otherwise the TFT Module may be damaged.
12) Small amount of materials having no flammability grade is used in the LCD module. The LCD module should be supplied by power complied with requirements of Limited Power Source (IEC60950-1 or UL60950-1), or be applied exemption.

confidential

2.0 General Description

This specification applies to the 21.5 inch-wide Color AHVA (IPS-like) TFT-LCD Module G215HAN01.2. The display supports the FHD [1920(H) x 1080(V)] screen format and 16.7M colors . All input signals are LVDS interface comaptible.

2.1 Display Characteristics

The following items are characteristics summary on the table under 25°C condition:

ITEMS	Unit	SPECIFICATIONS
Screen Diagonal	[mm]	546.86 (21.5")
Active Area	[mm]	476.064 (H) x 267.786 (V)
Pixels H x V		1920(x3) x 1080
Pixel Pitch	[um]	247.95 (per one triad) ×247.95
Pixel Arrangement		R.G.B. Vertical Stripe
Display Mode		AHVA Mode, Normally Black
White Luminance (Center)	[cd/m^2]	350 cd/m^2 (Typ.)
Contrast Ratio		1000 (Typ.)
Optical Response Time	[msec]	22
Nominal Input Voltage VDD	[Volt]	5 V (Typ)
Power Consumption (VDD line + LED line)	[Watt]	11.68 (Typ.) LCD module : PDD (Typ.)= 2.3 @ White pattern,Fv=60Hz Backlight unit : P_{BLU} (Typ.) =9.38 @Is= 70 mA
Weight	[Grams]	1740 (Typ)
Physical Size	[mm]	497.6(H) x 292.2(V) x 10.5 (D)Typ
Electrical Interface		Dual LVDS
Support Color		16.7M colors
Surface Treatment		AR, 1H
RoHS Compliance		RoHS Compliance
Temperature Range Operating Storage (Shipping)	 [°C] [°C]	 0~ 50 -20~ 60

Confidential

2.2 Optical Characteristics

The optical characteristics are measured under stable conditions at 25 °C:

Item	Unit	Conditions	Min.	Typ.	Max.	Note
Viewing Angle	[degree]	Horizontal (Right) CR >10 (Left)		89 89	- -	***2***
		Vertical (Up) CR > 10 (Down)		89 89	- -	
Contrast ratio		Normal Direction	800	1000	-	***3***
Response Time	[msec]	Raising Time (T_{rR})		12	22	***4***
		Falling Time (T_{rF})		10	20	
		Raising + Falling		22	42	
Color / Chromaticity Coordinates (CIE)		Red x	0.615	0.645	0.675	***5***
		Red y	0.305	0.335	0.365	
		Green x	0.282	0.312	0.342	
		Green y	0.599	0.629	0.659	
		Blue x	0.125	0.155	0.185	
		Blue y	0.024	0.054	0.084	
Color Coordinates (CIE) White		White x	0.283	0.313	0.343	
		White y	0.299	0.329	0.359	
Central Luminance	[cd/m^2]		280	350		***6***
Luminance Uniformity	[%]		75	80		***7***
Color Gamut	%			72		

AUO Confidential
For ACMEPOINT Internal Use Only
2010/02/21 15:47:0
Confidential

Note 1: **Measurement method**

The LCD module should be stabilized at given temperature for 30 minutes to avoid abrupt temperature change during measuring (at surface 35°C). In order to stabilize the luminance, the measurement should be executed after lighting Backlight for 30 minutes in a stable, windless and dark room.

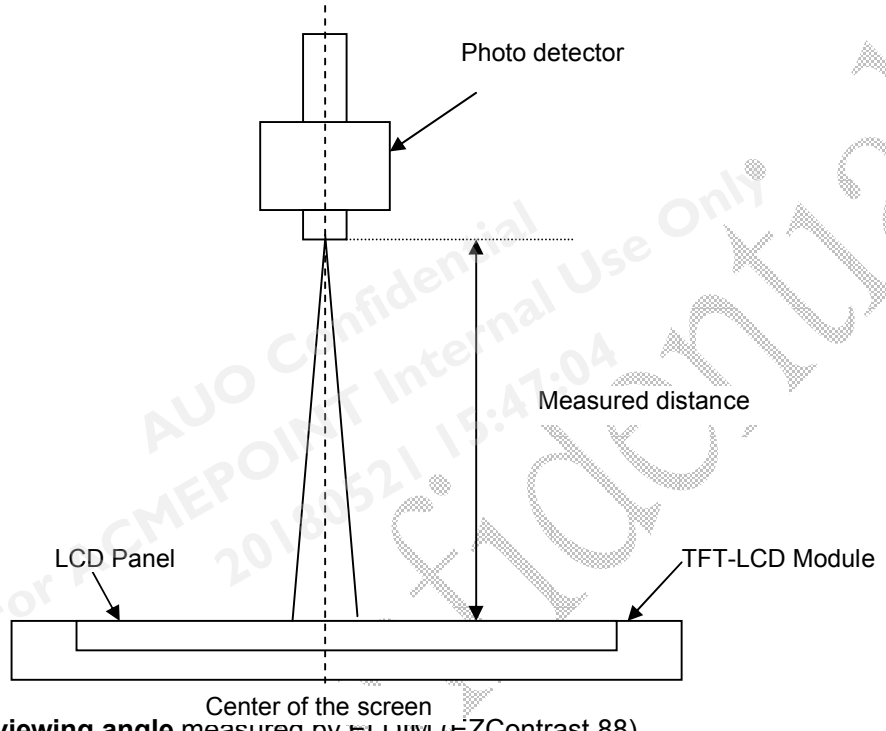

Note 2: **Definition of viewing angle** measured by ELDIM (EZContrast 88)

Viewing angle is the measurement of contrast ratio ≧10, at the screen center, over a 180° horizontal and 180° vertical range (off-normal viewing angles). The 180° viewing angle range is broken down as follows; 90° (θ) horizontal left and right and 90° (Φ) vertical, high (up) and low (down). The measurement direction is typically perpendicular to the display surface with the screen rotated about its center to develop the desired measurement viewing angle.

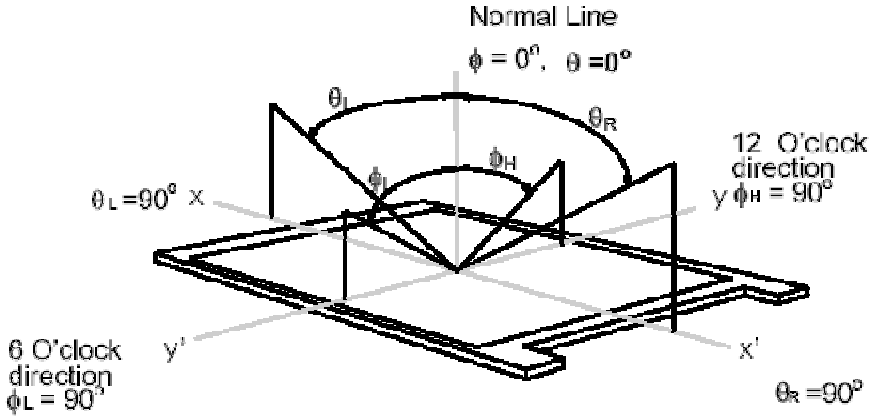

Note 3: **Contrast ratio is** measured by TOPCON SR-3

Note 4: **Definition of Response time** measured by Westar TRD-100A

The output signals of photo detector are measured when the input signals are changed from “Full Black” to “Full White” (rising time, Tr_R), and from “Full White” to “Full Black” (falling time, Tf_F), respectively. The response time is interval between the 10% and 90% (1 frame at 60 Hz) of amplitudes.
$Tr_R + Tf_F$ = 5 msec (typ.).

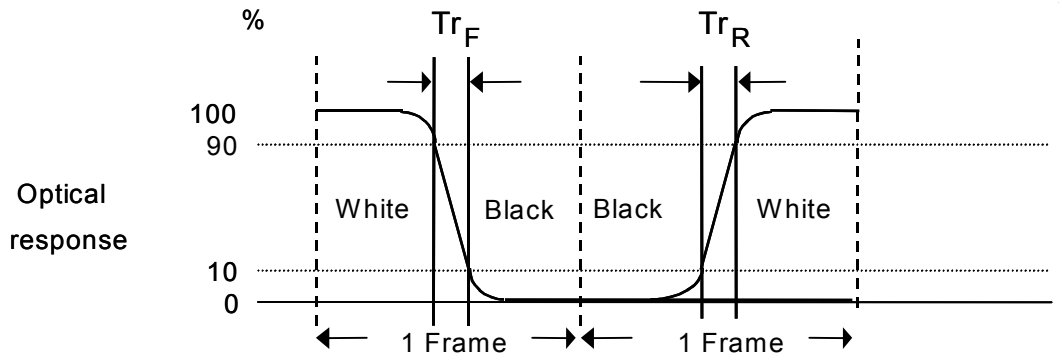

Note 5: **Color chromaticity and coordinates (CIE) is** measured by TOPCON SR-3

Note 6**: Central luminance is** measured by TOPCON SR-3

Note 7: **Luminance uniformity of these 9 points is defined as below and** measured by TOPCON SR-3

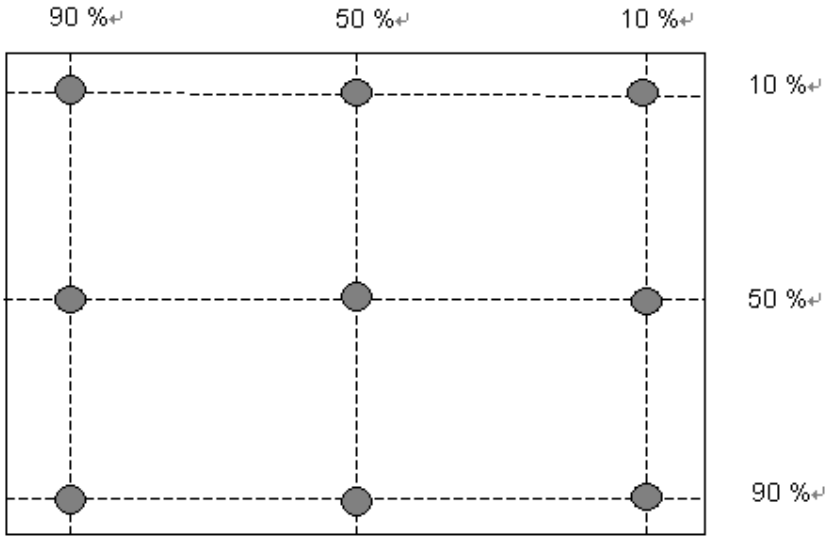

$$\text{Uniformity} = \frac{\text{Minimum Luminance in 9 points (1 - 9)}}{\text{Maximum Luminance in 9 Points (1 - 9)}}$$

3.0 Functional Block Diagram

The following diagram shows the functional block of the 21.5 inch Color TFT-LCD Module:

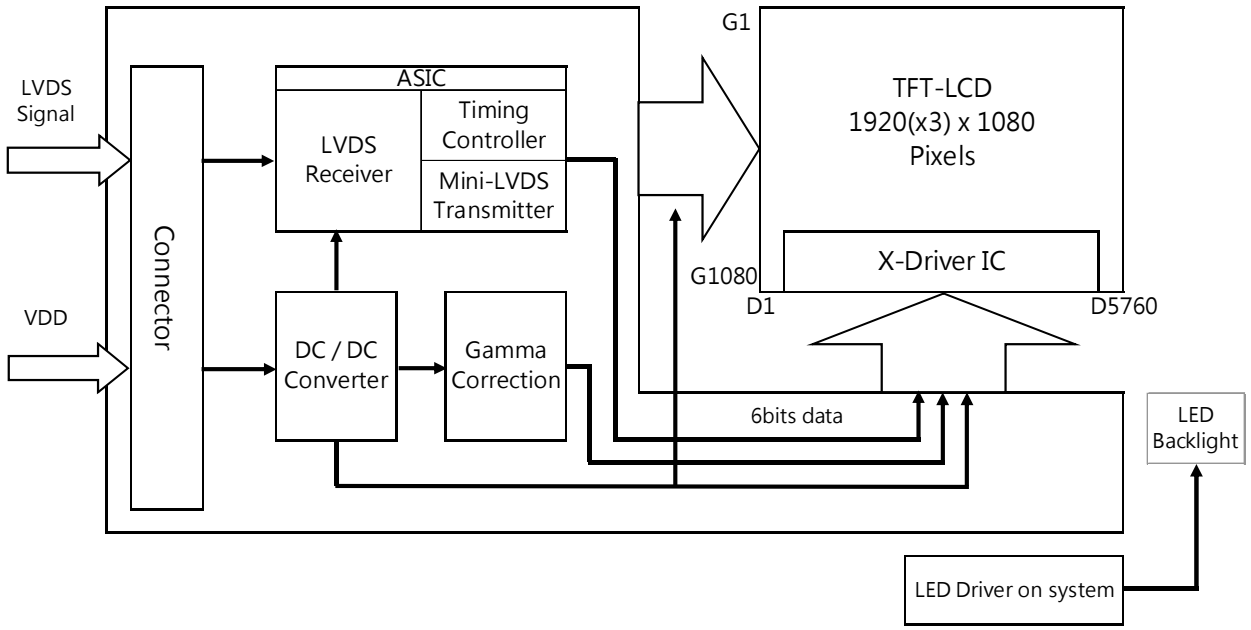

I/F PCB Interface:

Connector: MSBKT2407P30HB

Mating Type:

FI-X30HL (Locked Type)

COPY

4.0 Absolute Maximum Ratings

Absolute maximum ratings of the module are as following:

4.1 TFT LCD Module

Item	Symbol	Min	Max	Unit	Conditions
Logic/LCD Drive Voltage	VDD	-0.3	+5.5	[Volt]	***Note 1,2***

4.2 Absolute Ratings of Environment

Item	Symbol	Min.	Max.	Unit	Conditions
Operating Temperature	TOP	0	50	[°C]	***Note 3 & 4***
Operation Humidity	HOP	5	90	[%RH]	
Storage Temperature	TST	-20	60	[°C]	
Storage Humidity	HST	5	90	[%RH]	

Note 1: With in Ta (25°C)
Note 2: Permanent damage to the device may occur if exceeding maximum values
Note 3: For quality perfermance, please refer to AUO IIS(Incoming Inspection Standard).
Note 4: Operation Temperature +50°C is defined as panel surface termperature.

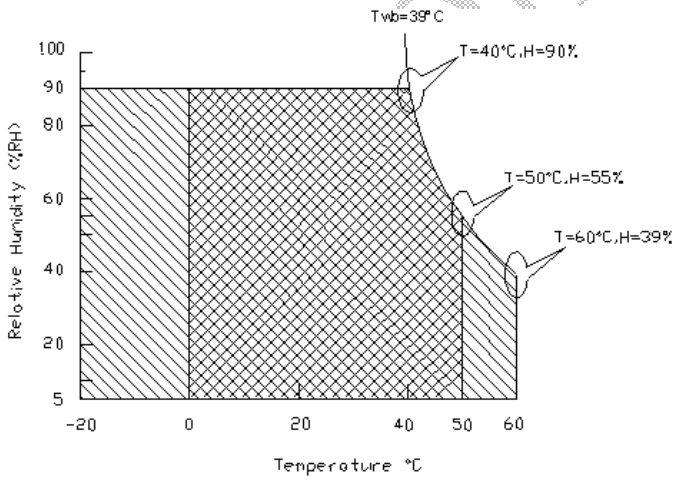

Operating Range Storage Range

Material

5.0 Electrical characteristics

5.1 TFT LCD Module

5.1.1 Power Specification

Input power specifications are as follows:

Symbol	Parameter	Min	Typ	Max	Unit	Conditions
VDD	Logic/LCD Drive Voltage	4.5	5.0	5.5	[Volt]	+/-10%
IDD	Input Current	-	0.46	0.55	[A]	VDD= 5.0V, All White Pattern At 60Hz,
PDD	VDD Power	-	2.3	2.75	[Watt]	VDD= 5.0V, All White Pattern At 60Hz
IRush	Inrush Current	-		3.0	[A]	Note 1
VDDrp	Allowable Logic/LCD Drive Ripple Voltage	-	-	500	[mV] p-p	VDD= 5.0V, All White Pattern At 60Hz

Note 1: Measurement conditions:

The duration of rising time of power input is 470us.

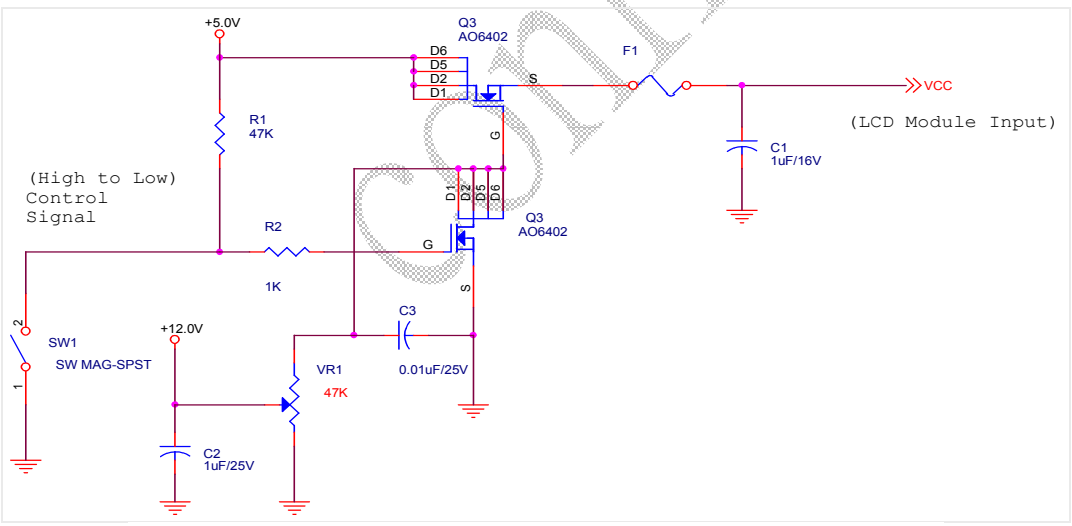

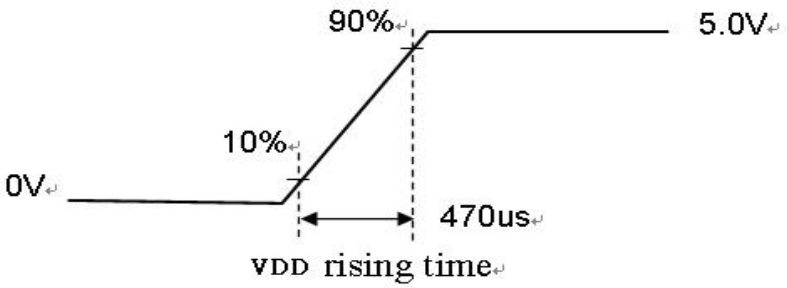

Confidential

5.1.2 Signal Electrical Characteristics

Input signals shall be low or Hi-Z state when VDD is off. Please refer to specifications of SN75LVDS82DGG (Texas Instruments) in detail.

Characteristics of each signal are as follows:

Symbol	Parameter	Min	Typ	Max	Units	Condition
VTH	Differential Input High Threshold			100	[mV]	VICM = 1.2V ***Note 1***
VTL	Differential Input Low Threshold	-100			[mV]	VICM = 1.2V ***Note 1***
|VID|	Input Differential Voltage	100	400	600	[mV]	***Note 1***
VICM	Differential Input Common Mode Voltage	1.0	1.2	1.5	[V]	VTH-VTL = 200MV (max) ***Note 1***

Note 1: LVDS Signal Waveform

Use RxOCLK- & RxOCLK+ as example.

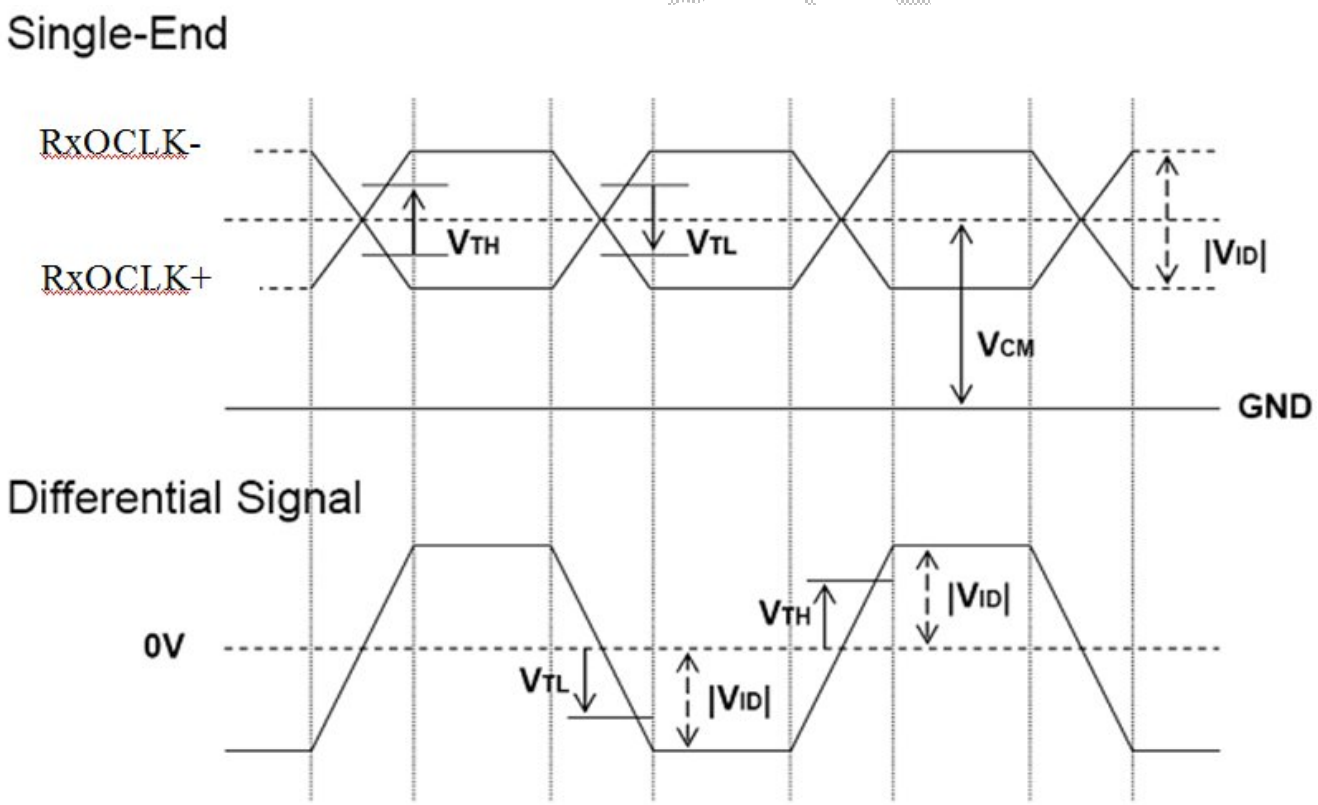

5.2 Backlight Unit (OM)

Following characteristics are measured under a stable condition at 25 °C (Room Temperature):

Symbol	Parameter	Min.	Typ.	Max.	Unit	Remark
VCC	Input Voltage	32.4	33.5	34.6	[Volt]	
I_{VCC}	Input Current		0.28	0.32	[A]	100% PWM Duty
P_{VCC}	Power Consumption		9.38	11.072	[Watt]	100% PWM Duty
Irush LED	Inrush Current	-		3	[A]	at rising time=470us
VLED on/off	On Control Voltage	3	5	5.5	Volt	
	Off Control Voltage			0.8	Volt	
F_{PWM}	Dimming Frequency				[Hz]	No LED Driver
	Swing Voltage				V	No LED Driver
	High Voltage				Volt	No LED Driver
	Low Voltage				Volt	No LED Driver
	Dimming Duty Cycle				%	No LED Driver
I_F	LED Forward Current		70		mA	Ta = 25 °C
V_F	LED Forward Voltage	-	2.8	3.4	Volt	I_F =70mA, Ta = 25°C
P_{LED}	LED Power Consumption	-	0.196	0.238	Watt	I_F =70mA, Ta = 25°C
Operation Lifetime		50,000			Hrs	I_F=70mA, Ta= 25°C

Note 1: Ta means ambient temperature of TFT-LCD module.

Note 2: VCC, Ivcc, P_{VCC}, Irush LED are defined for LED B/L.(100% duty of PWM dimming)

Note 3: I_F, V_F , P_{LED} are defined for single LED.

Note 4: If G215HAN01.2 module is driven by high current or at high ambient temperature & humidity condition. The operating life will be reduced.

Note 5: Operation life means brightness goes down to 50% initial brightness. Minimum operating life time is estimated data.

Note 6: Each LED light bar consists of 48 pcs LED package (4 strings x 12 pcs / string)

6.0 Signal Characteristic

6.1 Pixel Format Image

Following figure shows the relationship of the input signals and LCD pixel format.

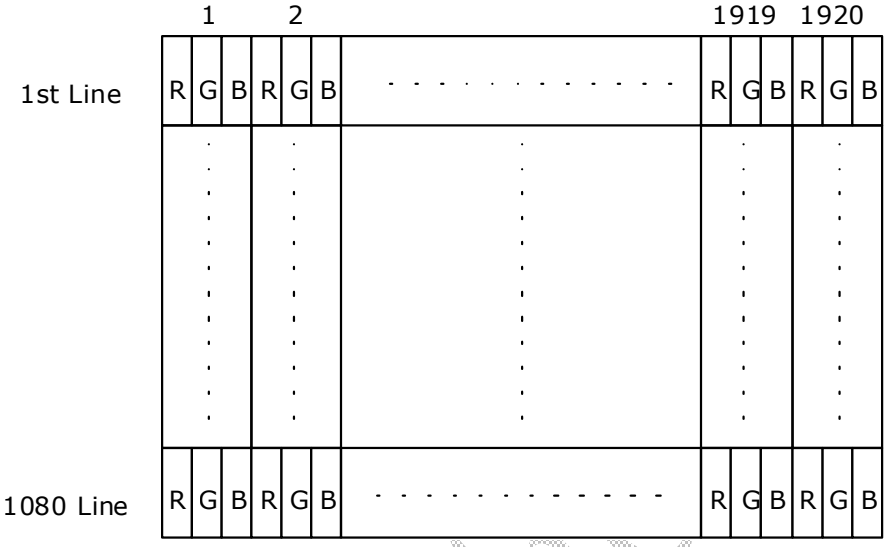

confidential

6.2 The input data format

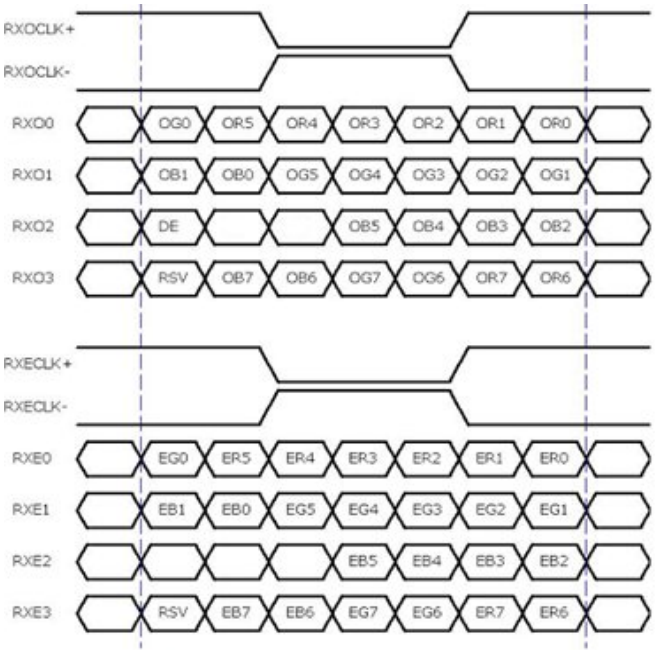

8 Bit Color Bit Order			
MSB	R7	G7	B7
	R6	G6	B6
	R5	G5	B5
	R4	G4	B4
	R3	G3	B3
	R2	G2	B2
	R1	G1	B1
LSB	R0	G0	B0

Note1: Normally DE mode only. VS and HS on EVEN channel are not used.

Note2: Please follow VESA.

Note3: 8-bits signal input.

confidential

6.3 Signal Description

The module using a pair of LVDS receiver **SN75LVDS82** / **SN75LVDS83**
(Texas Instruments) or compatible. LVDS is a differential signal technology for LCD interface and high speed data transfer device. Transmitter shall be SN75LVDS83(negative edge sampling) or compatible**.** The first LVDS port(RxOxxx) transmits odd pixels while the second LVDS port(RxExxx) transmits even pixels.

PIN #	SIGNAL NAME	DESCRIPTION
1	RxO0-	Negative LVDS differential data input (Odd data)
2	RxO0+	Positive LVDS differential data input (Odd data)
3	RxO1-	Negative LVDS differential data input (Odd data)
4	RxO1+	Positive LVDS differential data input (Odd data)
5	RxO2-	Negative LVDS differential data input (Odd data)
6	RxO2+	Positive LVDS differential data input (Odd data)
7	GND	Ground
8	RxOCLK-	Negative LVDS differential clock input (Odd clock)
9	RxOCLK+	Positive LVDS differential clock input (Odd clock)
10	RxO3-	Negative LVDS differential data input (Odd data)
11	RxO3+	Positive LVDS differential data input (Odd data)
12	RxE0-	Negative LVDS differential data input (Even data)
13	RxE0+	Positive LVDS differential data input (Even data)
14	GND	Ground
15	RxE1-	Negative LVDS differential data input (Even data)
16	RxE1+	Positive LVDS differential data input (Even data)
17	GND	Ground
18	RxE2-	Negative LVDS differential data input (Even data)
19	RxE2+	Positive LVDS differential data input (Even data)
20	RxECLK-	Negative LVDS differential clock input (Even clock)
21	RxECLK+	Positive LVDS differential clock input (Even clock)
22	RxE3-	Negative LVDS differential data input (Even data)
23	RxE3+	Positive LVDS differential data input (Even data)
24	GND	Ground
25	NC	No connection (for AUO test only. Do not connect)
26	NC	No connection (for AUO test only. Do not connect)
27	NC	No connection (for AUO test only. Do not connect)
28	VDD	Power Supply Input Voltage
29	VDD	Power Supply Input Voltage
30	VDD	Power Supply Input Voltage

Confidential

Note1: Start from right side

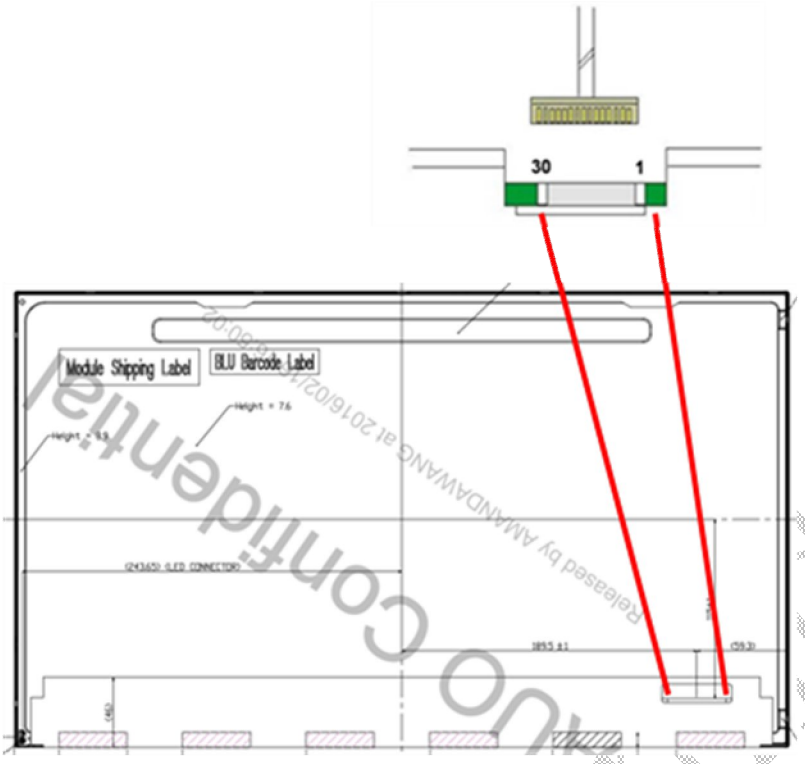

Note2: Input signals of clock shall be the same timing.

Note3: Please follow TV VESA Pin Assignment

Confidential
Released by AMANDAWANG at 2016/02/24

6.4 Timing Characteristics

Signal	Item	Symbol	Min	Typ	Max	Unit
V-section	Period	Tv	1094	1130	1836	Th
	Active	Tdisp(v)	1080	1080	1080	Th
	Blanking	Tbp(v)+Tfp(v)+PWvs	14	50	756	Th
H-section	Period	Th	1000	1050	1678	Tclk
	Active	Tdisp(h)	960	960	960	Tclk
	Blanking	Tbp(h)+Tfp(h)+PWhs	40	90	718	Tclk
Clock	Period	Tclk	11.2	14	18.6	ns
	Frequency	Freq.	53.7	71.2	90	MHz
Frame Rate	Frame Rate	1/Tv	49	60	76	Hz

Note 1: Only DE mode operation.
The input of Hsync & Vsync signal does not have an effect upon the LCD normal operation.
Note 2: The performance of the electro-optical characteristics may be influenced by variance of the vertical refresh rates.
Note 3: Horizontal period should be even.

confidential

6.5 Timing diagram

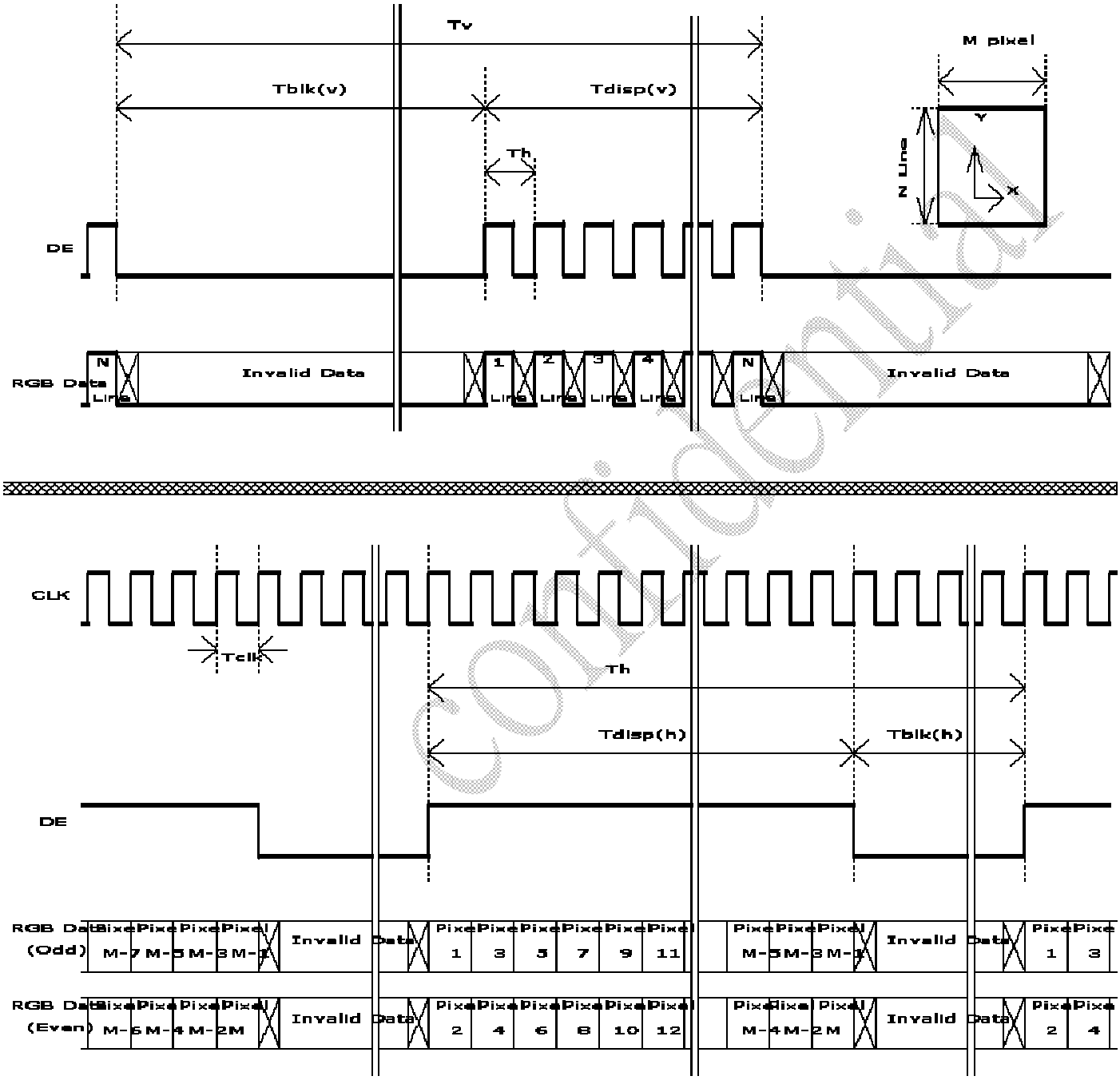

confidential

6.6 Power ON/OFF Sequence

VDD power and LED on/off sequence are as follows. Interface signals are also shown in the chart. Signals from any system shall be Hi-Z state or low level when VDD is off.

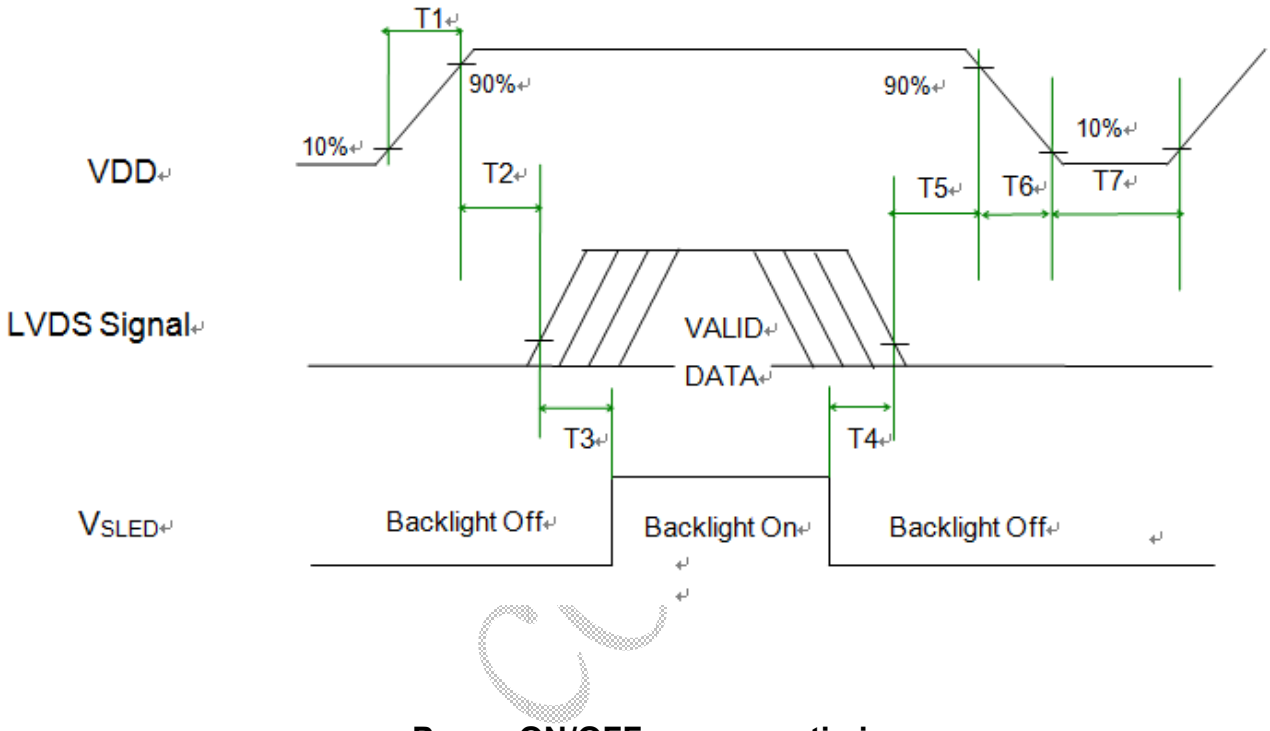

Power ON/OFF sequence timing

Parameter	Value			Units
	Min.	Typ.	Max.	
T1	0.5	-	10	[ms]
T2	0	-	50	[ms]
T3	500	-	-	[ms]
T4	100	-	-	[ms]
T5	0		50	[ms]
T6	0	-	200	[ms]
T7	1000	-	-	[ms]

7.0 Connector & Pin Assignment

Physical interface is described as for the connector on module. These connectors are capable of accommodating the following signals and will be following components.

7.1 TFT LCD Module

Connector Name / Designation	**Interface Connector / Interface card**
Manufacturer	STM
Type Part Number	**MSBKT2407P30HB**
Mating Housing Part Number	FI-X30HL or FI-X30C2L-NPB

7.1.1 Pin Assignment

Pin#	Signal Name	Pin#	Signal Name
1	RxOIN0-	2	RxOIN0+
3	RxOIN1-	4	RxOIN1+
5	RxOIN2-	6	RxOIN2+
7	GND	8	RxOCLKIN-
9	RxOCLKIN+	10	RxOIN3-
11	RxOIN3+	12	RxEIN0-
13	RxEIN0+	14	GND
15	RxEIN1-	16	RxEIN1+
17	GND	18	RxEIN2-
19	RxEIN2+	20	RxECLKIN-
21	RxECLKIN+	22	RxEIN3-
23	RxEIN3+	24	GND
25	Aging	26	SCL For PVCOM
27	SDA For PVCOM	28	VDD
29	VDD	30	VDD

Confidential

7.2 LED Backlight Unit: LED Connector

Connector Name / Designation	LED Connector
Manufacturer	ENTERY
Connector Model Number	3707K-S06N-21R
Mating Connector Model Number	H112K-P06N-00B (Non-Locking type) H112K-P06N-13B (Locking type)

7.3 LED Connector Pin Assignment

Pin#	Symbol	Description
1	Ch1	LED Current Feedback Terminal (Channel 1)
2	Ch2	LED Current Feedback Terminal (Channel 2)
3	V_{SLED}	LED Power Supply Voltage Input Terminal
4	V_{SLED}	LED Power Supply Voltage Input Terminal
5	Ch3	LED Current Feedback Terminal (Channel 3)
6	Ch4	LED Current Feedback Terminal (Channel 4)

confidential

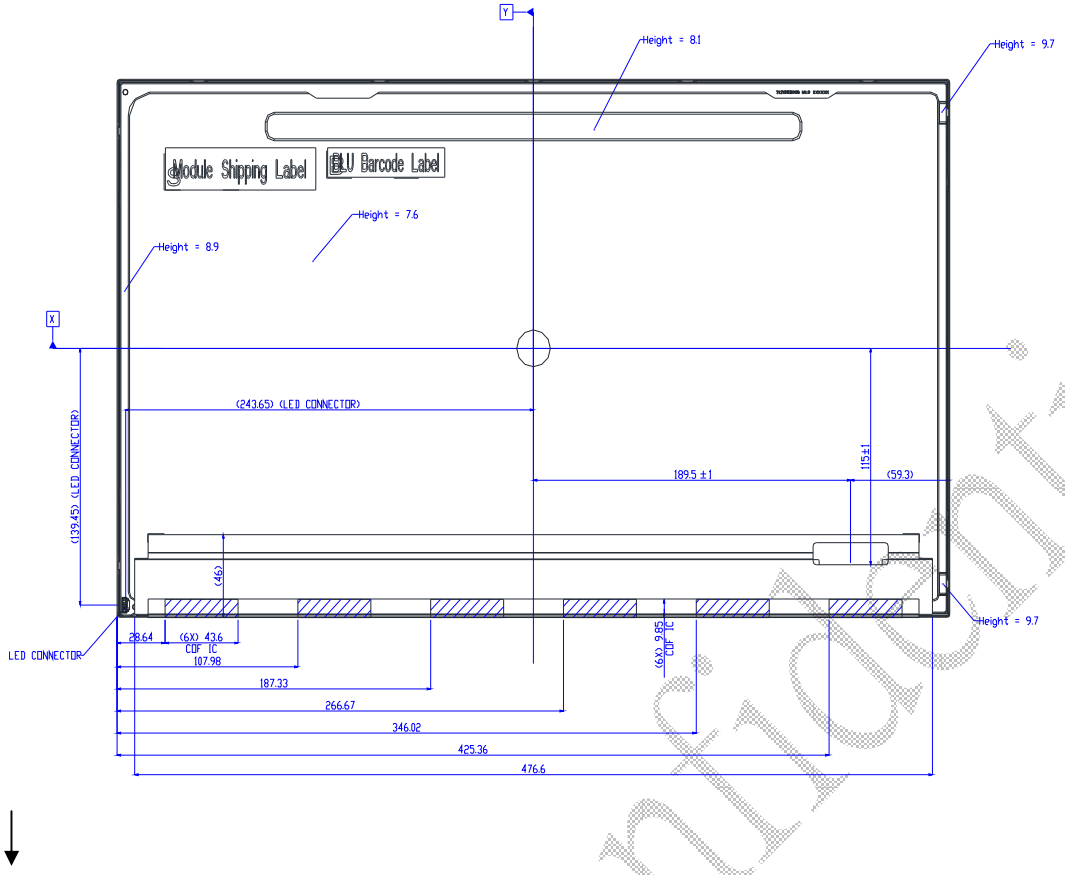

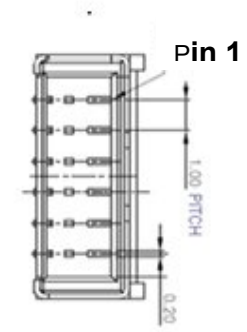

confidential

8.0 Reliability Test

Environment test conditions are listed as following table.

Items	Required Condition	Note
Temperature Humidity Bias (THB)	Ta= 50°C, 80%RH, 300hours	
High Temperature Operation (HTO)	Ta= 50°C, 300hours	
Low Temperature Operation (LTO)	Ta= 0°C, 300hours	
High Temperature Storage (HTS)	Ta= 60°C, 300hours	
Low Temperature Storage (LTS)	Ta= -20°C, 300hours	
Vibration Test (Non-operation)	Acceleration: 1.5 Grms Wave: Random Frequency: 10 - 200 Hz Sweep: 30 Minutes each Axis (X, Y, Z)	
Shock Test (Non-operation)	Acceleration: 50 G Wave: Half-sine Active Time: 20 ms Direction: ±X, ±Y, ±Z (one time for each Axis)	
Thermal Shock Test (TST)	-20°C /30min, 60°C /30min, 100 cycles	***1***
On/Off Test	On/10sec, Off/10sec, 30,000 cycles	
ESD (Electro Static Discharge)	Contact Discharge: ± 8KV, 150pF(330Ω) 1sec, 8 points, 25 times/ point.	***2***
	Air Discharge: ± 15KV, 150pF(330Ω) 1sec 8 points, 25 times/ point.	
Altitude Test	Operation:10,000 ft Non-Operation:30,000 ft	

Note 1: The TFT-LCD module will not sustain damage after being subjected to 100 cycles of rapid temperature change. A cycle of rapid temperature change consists of varying the temperature from -20°C to 60°C, and back again. Power is not applied during the test. After temperature cycling, the unit is placed in normal room ambient for at least 4 hours before power on.

Note 2: According to EN61000-4-2 , ESD class B: Some performance degradation allowed. No data lost. Self-recoverable. No hardware failures.

Note 3 : Mura shall be ignored after high temperature reliability test.

Confidential

9.0 Shipping Label & Packaging

9.1 Shipping Label

The label is on the panel as shown below:

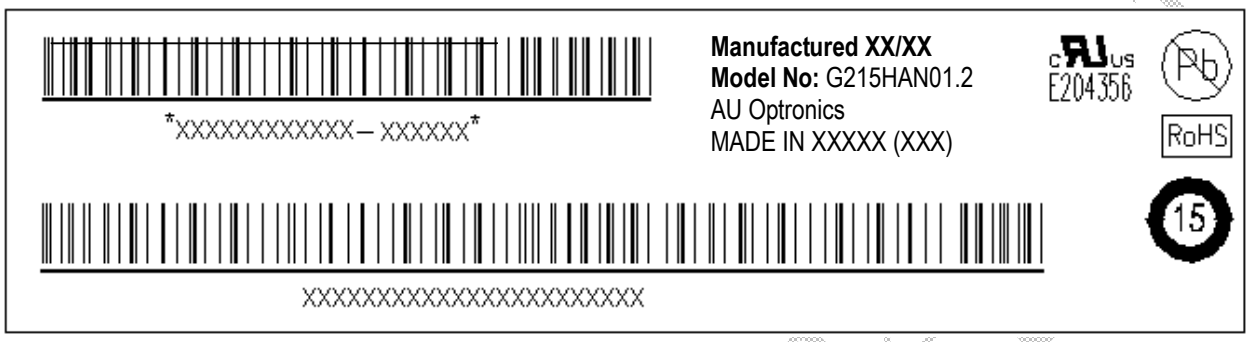

Note 1: For Pb Free products, AUO will add for identification.

Note 2: For RoHS compatible products, AUO will add for identification.

Note 3: For China RoHS compatible products, AUO will add for identification.

Note 4: The Green Mark will be presented only when the green documents have been ready by AUO Internal Green Team.

confidential

9.2 Packaging

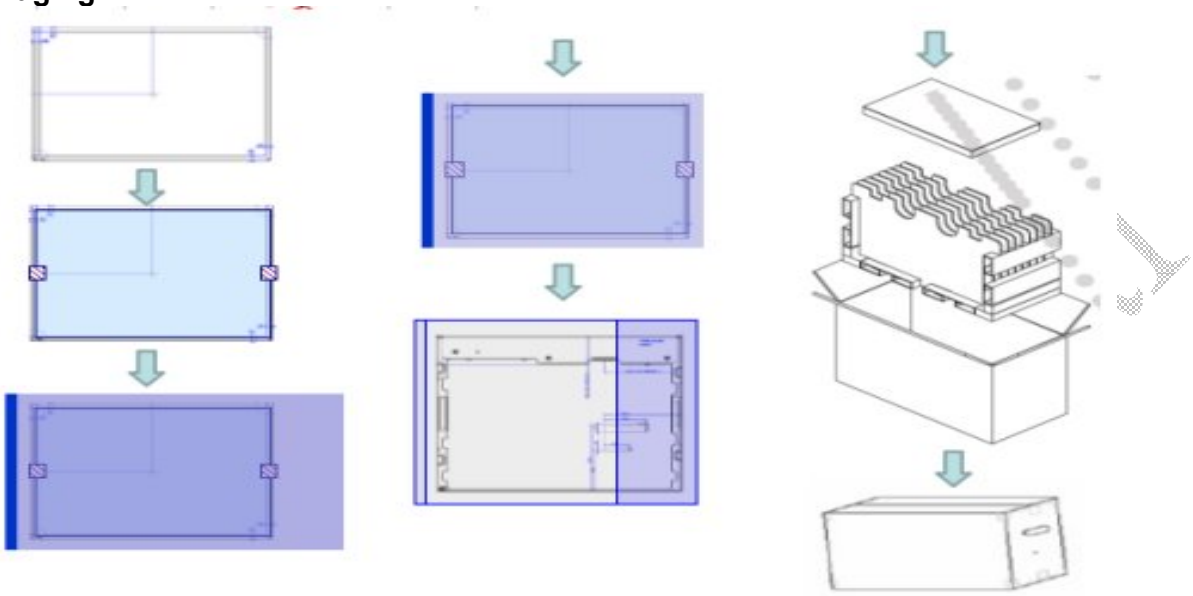

Max capacity：8 TFT-LCD module per carton

Max weight: 18.0 kg per carton

Outside dimension of carton: : 580mm*275mm*385mm

Pallet size： 1200mm*800mm*132mm

9.3 Palletizing

Box stacked

Module by air：(2 *4) *3 layers，one pallet put 18 boxes，total 144pcs module

Module by sea：One pallet (2 *4 *3 layers) No Double Pallet，total 192 pcs module

Module by sea_ HQ : One pallet (2 *4 *3 layers) No Double Pallet Total 192 pcs module

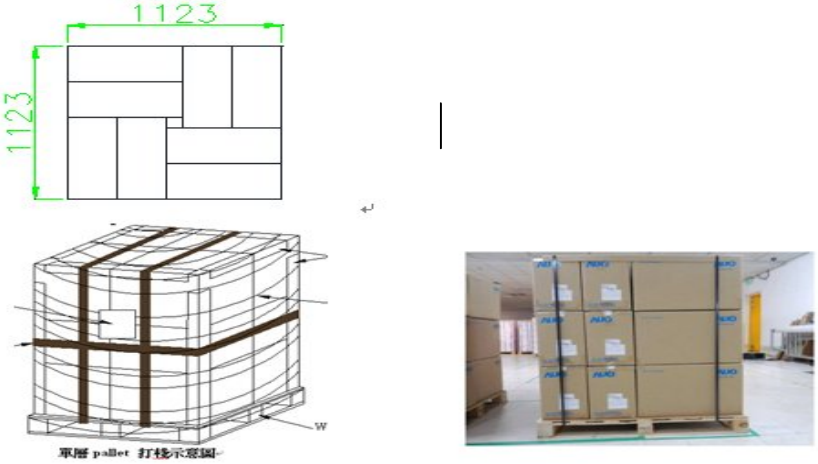

By air / By sea：one pallet

10.0 Mechanical Characteristics

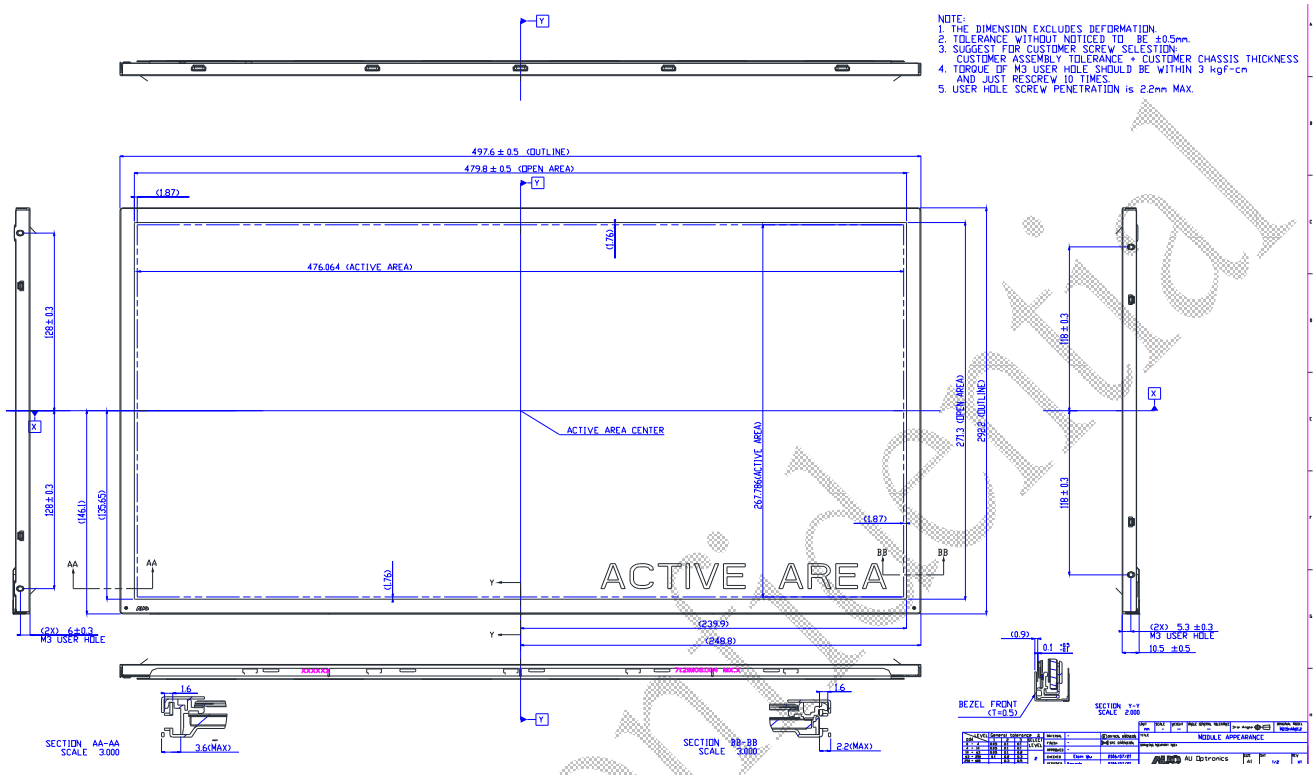

3TFTLCDL070(T0127)

Confidential

設計驗證
工程課
2024-11-07
發行
鈺緯科技開發股份有限公司

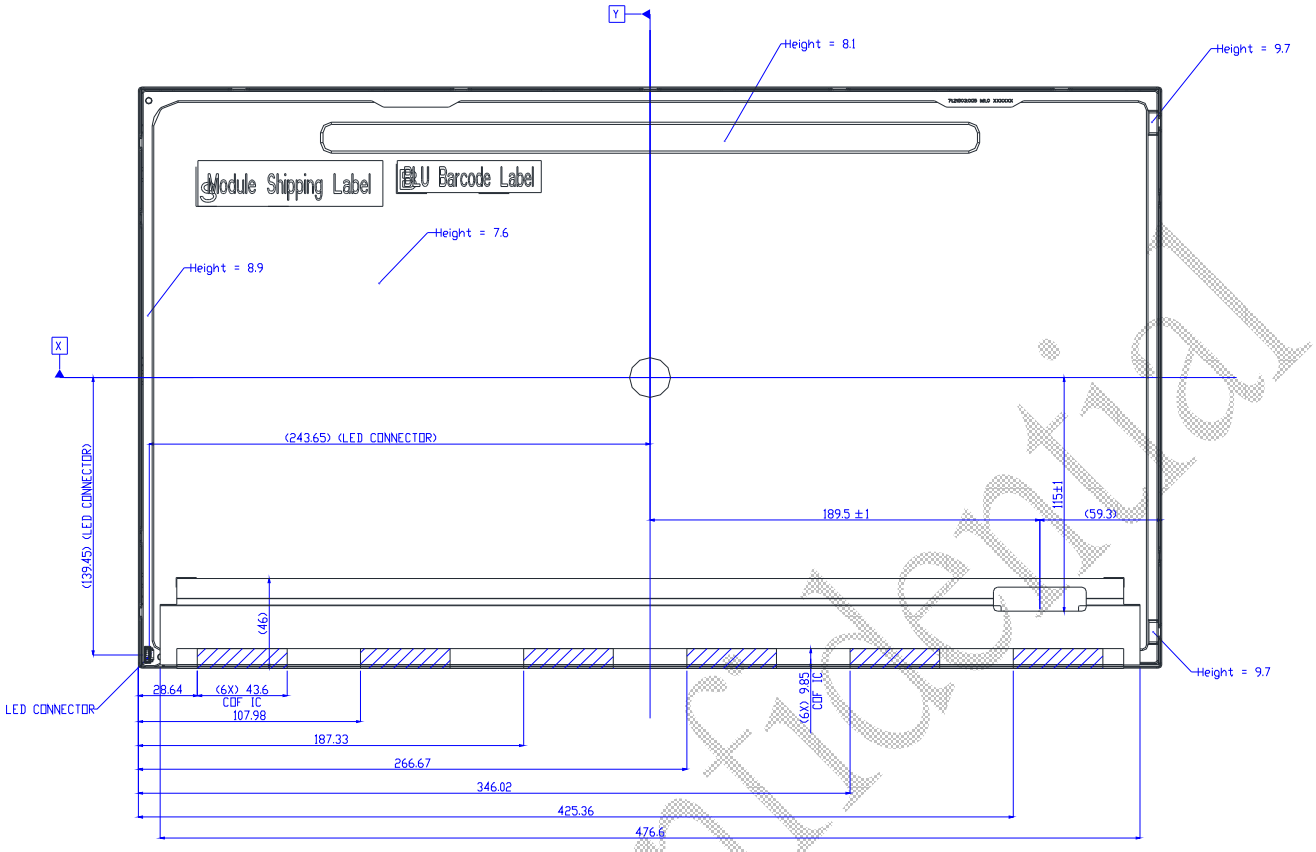

3TFTLCDL070(T0127)

Confidential

設計驗證
工程課
2024-11-07
發行
銘緯科技開發股份有限公司

11 Safety

11.1 Sharp Edge Requirements

There will be no sharp edges or comers on the display assembly that could cause injury.

11.2 Materials

11.2.1 Toxicity

There will be no carcinogenic materials used anywhere in the display module. If toxic materials are used, they will be reviewed and approved by the responsible AUO toxicologist.

11.2.2 Flammability

All components including electrical components that do not meet the flammability grade UL94-V1 in the module will complete the flammability rating exception approval process.

The printed circuit board will be made from material rated 94-V1 or better. The actual UL flammability rating will be printed on the printed circuit board.

11.3 Capacitors

If any polarized capacitors are used in the display assembly, provisions will be made to keep them from being inserted backwards.

11.4 National Test Lab Requirement

The display module will satisfy all requirements for compliance to:

UL 60950-1, Second Edition	U.S.A. Information Technology Equipment

confidential

Anti-Reflection Film Data Sheet

These DATA are representative values, and NOT the values for guaranteeing.

Product No.		2021 New AR FILM
Base film (Thickness)		ARF（80μm） Anti-Refelectio Film
Film Structure	Protective film (Thickness)	PET＋Adhesive（65μm）
	Base film + AR layer (Thickness)	Anti-Reflection layer（85μm）
	OCA Thickness	25μm
	Release film (Thickness)	PET（75μm）
Optical properties ※1	Reflectance (5°)	0.2%
	Total light transmittance	95.3%
	Haze	0.5%
	Yellowness index	1.2%
	UV transmittance (370nm)	0.2%
Wettability	Water contact angle	＜25°
Thermal properties ※2	Thermal shrinkage (95℃×24hr)	MD：0.2%TD：- 0.1%
	CTE （$\times 10^{-5}$/℃，95℃）	MD：3.9 TD：2.2

※1: Reflectance is measured on black acrylic plate.
Others are measured on glass plate.
※2：Thermal properties are measured by Base film + Anti-Reflection layer.

AR Film 5° Reflection Spectrum

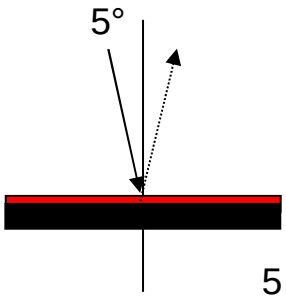

Film attached to a black acrylic plate for measurement

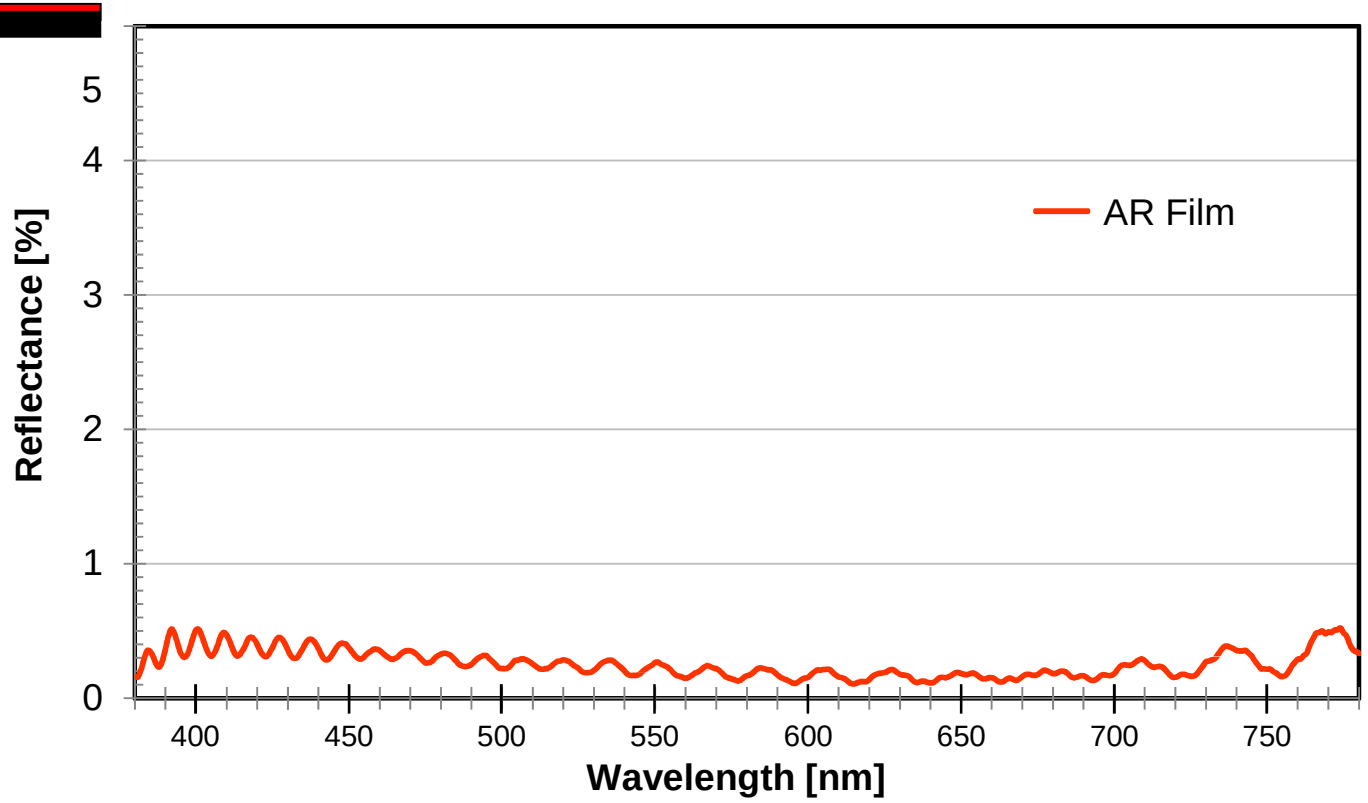

Test Equipment: (UV-2450)

Transmittance Spectrum

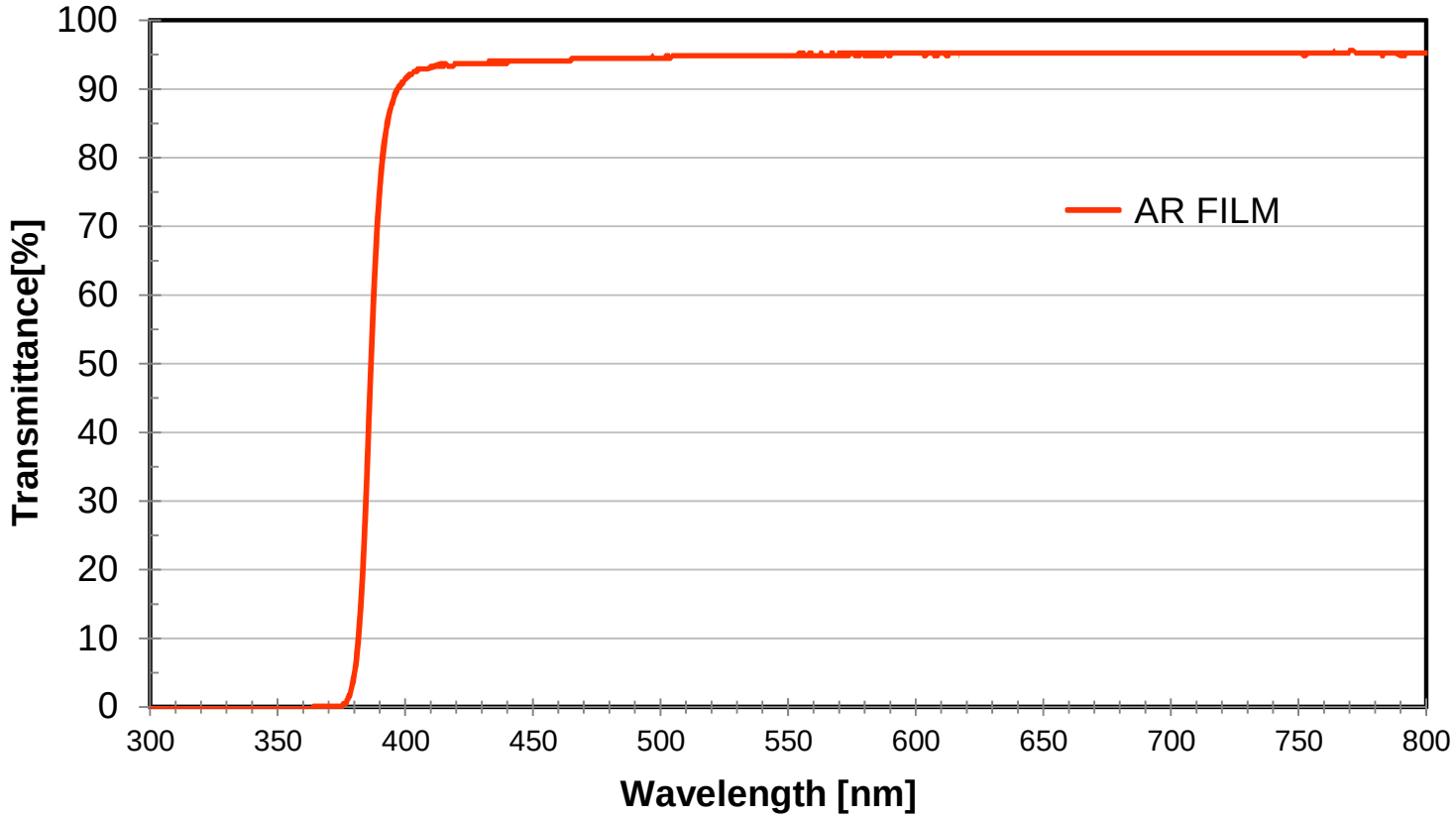

Test Equipment: (UV-2450)