

設計驗證
工程課
2024-10-30
發行
鈺緯科技開發股份有限公司

DATE: 2020/9/4

COMCHIP

承　認　書

客戶名稱：鈺緯科技開發股份有限公司

3DZ5232003Y(D0054)

品　　名：MMSZ5232B-HF

規　　格：SOD-123, Pd=500mW VZ=5.6V IZT=20mA, RoHS, Halogen free

適用機種：

物料編號：

附加文件：SPEC. 2D.PCN

承　認　簽　章					
					Eva

設計驗證
工程課
2024-10-30
發行
鈺緯科技開發股份有限公司

株式會社　村田製作所總代理
株式會社　廣瀨電機台灣代理

佳普股份有限公司

台北市信義路四段 184 號 4 樓

TEL:(02)27089155(代表四線)

FAX:(02)27068923　27021777

MMSZ5226AS-HF Thru. MMSZ5263AS-HF

Voltage: 3.3 to 56 V
Power: 200 mW
RoHS Device
Halogen Free

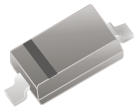

Features

- Large selection of zener voltages: 3.3V~56V.
- Tight voltage tolerance: ±2% .
- Ultra low-profile package well suited for automated assembly.

SOD-323

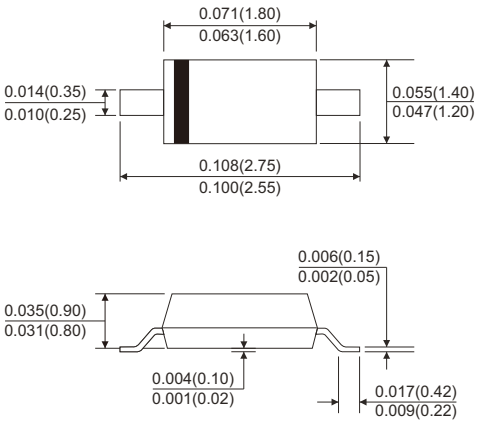

Dimensions in inches and (millimeter)

Mechanical data

- Case: SOD-323, molded plastic.
- Polarity: Cathode line denotes the cathode end.
- Mounting position: Any

Circuit Diagram



Maximum Ratings (TA=25°C unless otherwise noted)

Parameter	Symbol	Value	Unit
Forward voltage @ IF=10mA	VF	0.9	V
Power dissipation	PC	200	mW
Thermal resistance, junction to ambient	RθJA	625	°C/W
Thermal resistance, junction to case	RθJC	337	°C/W
Junction temperature range	TJ	-55 to +150	°C
Storage temperature range	TSTG	-65 to +150	°C

Note: 1. These ratings are limiting values above which the serviceability of the diodes may be impaired.

Electrical Characteristics (T_A=25°C unless otherwise noted)

Part Number	Zener Voltage Range			Test Current	Maximum Zener Impedance		Maximum Reverse Leakage Current		Marking Code
	V_Z @ I_{ZT}			I_{ZT}	Z_{ZT} @ I_{ZT}	Z_{ZK} @ I_{ZK}=0.25mA	I_R @ V_R		
	Min(V)	Typ(V)	Max(V)	(mA)	(Ω)	(Ω)	(μA)	(V)	
MMSZ5226AS-HF	3.23	3.3	3.37	20	28	1600	5.0	1.0	D1
MMSZ5227AS-HF	3.53	3.6	3.67	20	24	1700	5.0	1.0	D2
MMSZ5228AS-HF	3.82	3.9	3.98	20	23	1900	5.0	1.0	D3
MMSZ5229AS-HF	4.21	4.3	4.39	20	22	2000	5.0	1.0	D4
MMSZ5230AS-HF	4.61	4.7	4.79	20	19	1900	5.0	2.0	D5
MMSZ5231AS-HF	5.00	5.1	5.20	20	17	1600	5.0	2.0	E1
MMSZ5232AS-HF	5.49	5.6	5.71	20	11	1600	5.0	3.0	E2
MMSZ5233AS-HF	5.88	6.0	6.12	20	7	1600	5.0	3.5	E3 •
MMSZ5234AS-HF	6.08	6.2	6.32	20	7	1000	5.0	4.0	E4
MMSZ5235AS-HF	6.66	6.8	6.94	20	5	750	3.0	5.0	E5
MMSZ5236AS-HF	7.35	7.5	7.65	20	6	500	3.0	6.0	F1
MMSZ5237AS-HF	8.04	8.2	8.36	20	8	500	3.0	6.0	F2
MMSZ5238AS-HF	8.53	8.7	8.87	20	8	600	3.0	6.0	F3 •
MMSZ5239AS-HF	8.92	9.1	9.28	20	10	600	3.0	6.5	F4
MMSZ5240AS-HF	9.80	10	10.20	20	17	600	3.0	8.0	F5
MMSZ5241AS-HF	10.78	11	11.22	20	22	600	3.0	8.4	H1
MMSZ5242AS-HF	11.76	12	12.24	20	30	600	2.0	9.1	H2
MMSZ5243AS-HF	12.74	13	13.26	9.5	13	600	1.0	9.9	H3
MMSZ5244AS-HF	13.72	14	14.28	9.0	15	600	0.5	10.5	H4
MMSZ5245AS-HF	14.70	15	15.30	8.5	16	600	0.5	11.0	H5
MMSZ5246AS-HF	15.68	16	16.32	7.8	17	600	0.1	12	J1
MMSZ5247AS-HF	16.66	17	17.34	7.5	19	600	0.1	13	J2 •
MMSZ5248AS-HF	17.64	18	18.36	7.0	21	600	0.1	14	J3
MMSZ5250AS-HF	19.60	20	20.40	6.2	25	600	0.1	15	J5
MMSZ5251AS-HF	21.56	22	22.44	5.6	29	600	0.1	17	K1
MMSZ5252AS-HF	23.52	24	24.48	5.2	33	600	0.1	18	K2
MMSZ5253AS-HF	24.50	25	25.50	5.0	35	600	0.1	19	K3
MMSZ5254AS-HF	26.46	27	27.54	5.0	41	600	0.1	21	K4
MMSZ5255AS-HF	27.44	28	28.56	4.5	44	600	0.1	21	K5
MMSZ5256AS-HF	29.40	30	30.60	4.2	49	600	0.1	23	M1
MMSZ5257AS-HF	32.34	33	33.66	3.8	58	700	0.1	25	M2
MMSZ5258AS-HF	35.28	36	36.72	3.4	70	700	0.1	27	M3
MMSZ5259AS-HF	38.22	39	39.78	3.2	80	800	0.1	30	M4
MMSZ5260AS-HF	42.14	43	43.86	3.0	93	900	0.1	33	M5
MMSZ5261AS-HF	46.06	47	47.94	2.7	105	1000	0.1	36	N1
MMSZ5262AS-HF	49.98	51	52.02	2.5	125	1000	0.1	39	N2
MMSZ5263AS-HF	54.88	56	57.12	2.2	150	1300	0.1	43	3A

Typical Rating and Characteristic Curves (MMSZ5226AS-HF Thru. MMSZ5263AS-HF)

Fig.1 - Power Dissipation vs Ambient Temperature

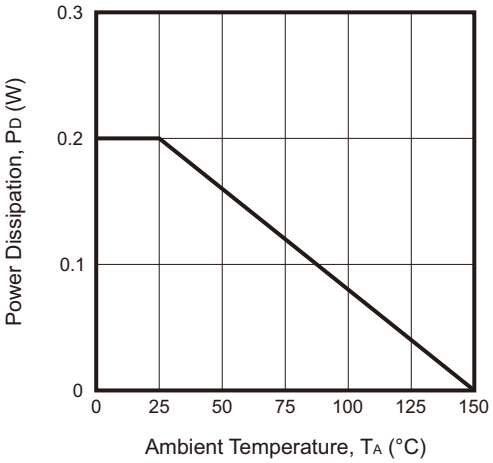

Fig.2 - Typical Capacitance

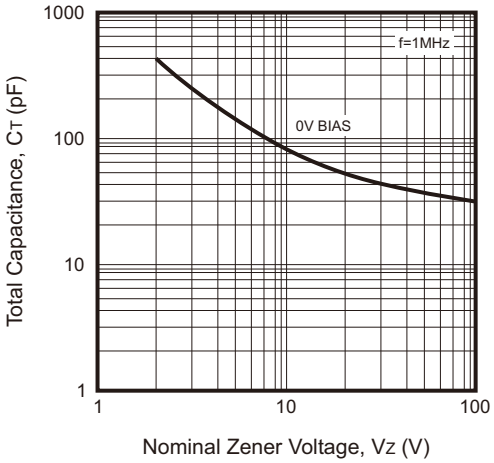

Fig.3 - Zener Breakdown Characteristics

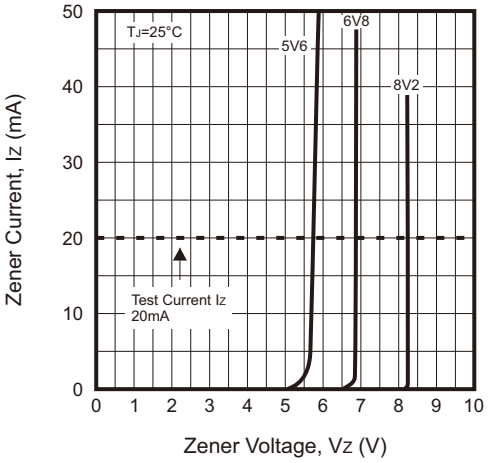

Fig.4 - Zener Breakdown Characteristics

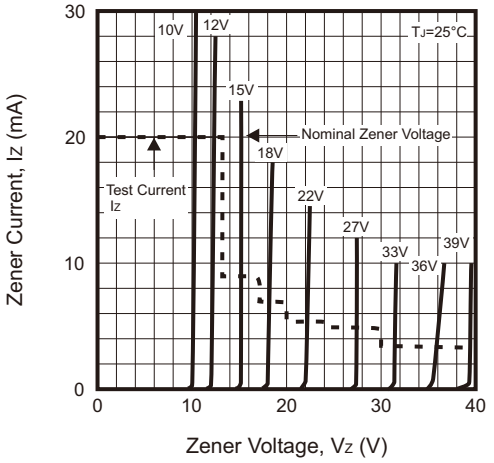

Reel Taping Specification

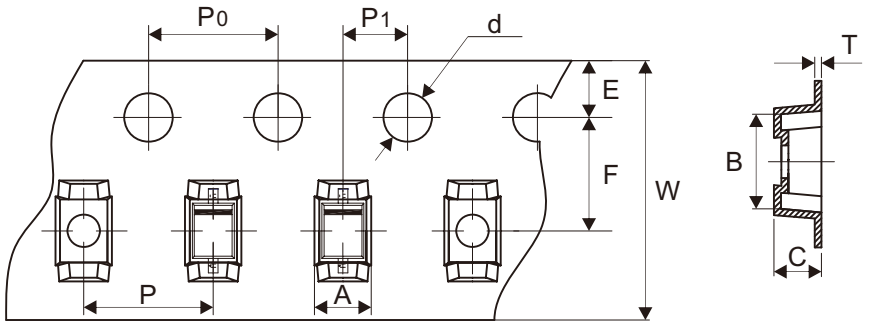

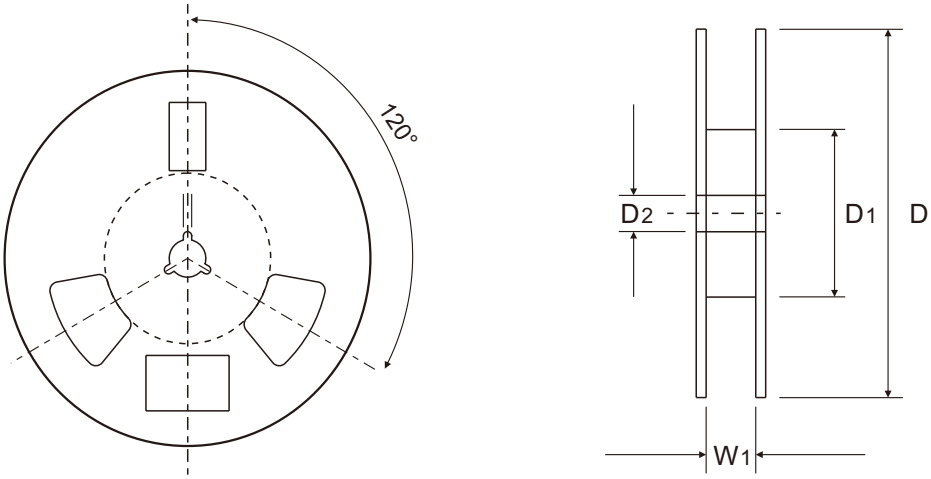

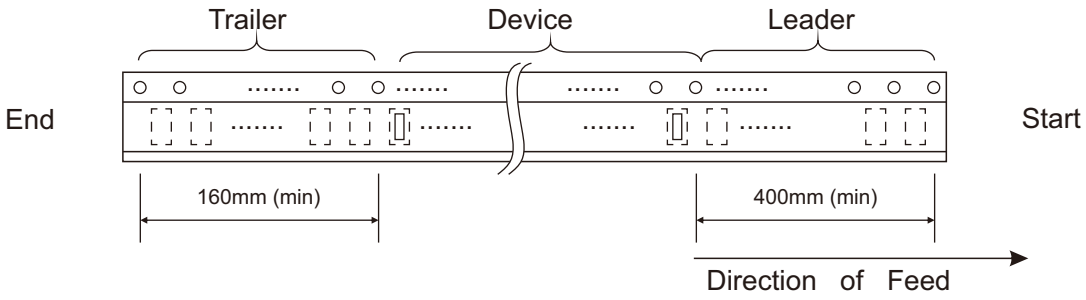

	SYMBOL	A	B	C	d	D	D_1	D_2
SOD-323	(mm)	1.46 ± 0.05	3.30 ± 0.05	1.25 ± 0.05	1.50 + 0.10	178.00 ± 1.00	54.00 ± 0.50	13.00 ± 0.50
	(inch)	0.057 ± 0.002	0.130 ± 0.002	0.049 ± 0.002	0.059 + 0.004	7.008 ± 0.039	2.126 ± 0.020	0.512 ± 0.020

	SYMBOL	E	F	P	P_0	P_1	T	W	W_1
SOD-323	(mm)	1.75 ± 0.10	3.50 ± 0.05	4.00 ± 0.10	4.00 ± 0.10	2.00 ± 0.05	0.25 ± 0.02	8.00 + 0.30 − 0.10	9.50 ± 1.00
	(inch)	0.069 ± 0.004	0.138 ± 0.002	0.157 ± 0.004	0.157 ± 0.004	0.079 ± 0.002	0.010 ± 0.001	0.315 + 0.012 − 0.004	0.374 ± 0.039

Marking Code

Part Number	Marking Code
MMSZ5226AS-HF Thru. MMSZ5263AS-HF	See Page 2



XX/ XX· = Product type marking code

= Cathode band

Suggested P.C.B. PAD Layout

SIZE	SOD-323	
	(mm)	(inch)
A	0.63	0.025
B	0.83	0.033
C	1.60	0.063
D	2.85	0.112

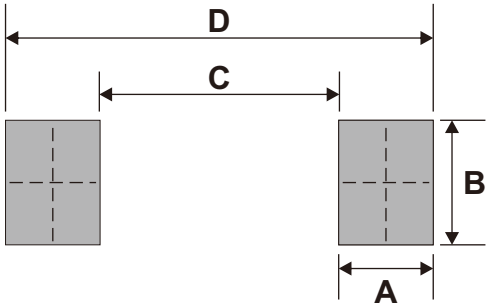

Standard Packaging

Case Type	REEL PACK	
	REEL (pcs)	Reel Size (inch)
SOD-323	3,000	7

Doc. No. : PDN230101
Date : Jan 10, 2024

To : Dear Valued Customers

Product Discontinuance Notice

Subject：Products discontinue.

Parts Affected：

Please refer the attached.

Reason for Discontinuance：

Follow the international halogen-free specification, meet the EU Halogen Free and RoHS requirements. Meanwhile, some parts were discontinued due to low demand.

Alternative Products：

Please refer the attached.

Effective Date：

EOL p/n	Implemented from
CDBA1150-G	Effective immediately
CDBA1200-G	
CDBA3150-G	
CDBA3200-G	
CDBC5150-G	
CDBC5200-G	
SR3150-G	
SR3200-G	
CDBD2SC21200-G	
CDBJFSC101200-G	
CDBAS140-HF	Last time buy：Feb 28, 2024 Effective Date：May 30, 2024
CDBAS160-HF	
CDBDSC10650-G	Last time buy：Mar 30, 2024 Effective Date：May 30, 2024
CDBDSC3650-G	
CDBDSC51200-G	
CDBDSC8650-G	
CDBJFSC10650-G	
CDBJFSC3650-G	
CDBJFSC5650-G	
CDBJFSC8650-G	

	CDBJSC10650-G	Last time buy：Mar 30, 2024 Effective Date：May 30, 2024
	CDBJSC5650-G	
	CDBJSC8650-G	
	CZRW5223B-HF Thru.CZRW5267B-HF	
	CDSW4148-HF	
	CDSV-19-HF Thru. CDSV-21-HF	
	CDST-99-HF	
	CDST-70-HF	
	CDST-56-HF	
	CZRV5223B-G Thru.CZRV5256B-G	Last time buy：Apr 30, 2024 Effective Date：Jun 30, 2024
	CDBHD140L-G Thru.CDBHD1100L-G	
	CDBHD240-G Thru.CDBHD2100-G	
	ACFRA104-G	Last time buy：Aug 30, 2027 Effective Date：Oct 30, 2027

R&D Dept. Signature：	QA Dept. Signature：

Product Discontinuance Notice

Doc. No. : PDN230101

EOL p/n	Package	Alternative p/n
SR3150-G	DO-27/DO-201AD	SR3150-HF
SR3200-G	DO-27/DO-201AD	SR3200-HF
CDBA1150-G	SMA	CDBA1150-HF
CDBA1200-G	SMA	CDBA1200-HF
CDBA3150-G	SMA	CDBA3150-HF
CDBA3200-G	SMA	CDBA3200-HF
CDBC5150-G	SMC	CDBC5150-HF
CDBC5200-G	SMC	CDBC5200-HF
CDBAS140-HF	SMA-S	Please contact sales person or manufacturer's representative.
CDBAS160-HF	SMA-S	
CDBDSC10650-G	TO-252/D-PAK	
CDBDSC3650-G	TO-252/D-PAK	
CDBDSC51200-G	TO-252/D-PAK	
CDBDSC8650-G	TO-252/D-PAK	
CDBD2SC21200-G	TO-263/D2PAK	
CDBJSC10650-G	TO-220-2	
CDBJSC5650-G	TO-220-2	
CDBJSC8650-G	TO-220-2	
CDBJFSC10650-G	TO-220F	
CDBJFSC3650-G	TO-220F	
CDBJFSC5650-G	TO-220F	
CDBJFSC8650-G	TO-220F	
CDBJFSC101200-G	TO-220F	
CDSW4148-HF	SOD-123	1N4148W-HF
CZRV5223B-G Thru.CZRV5256B-G	SOD-323	CZRV5221B-HF Thru. CZRV5267B-HF
CZRW5223B-HF Thru.CZRW5267B-HF	SOD-323	MMSZ5221B-HF Thru. MMSZ5267B-HF
CDSV-19-HF Thru. CDSV-21-HF	SOD-323	BAV19WS-HF Thru. BAV21WS-HF
CDST-99-HF	SOT-23	BAV99-HF
CDST-70-HF	SOT-23	BAV70-HF
CDST-56-HF	SOT-23	BAW56-HF
CDBHD140L-G Thru.CDBHD1100L-G	TO-269AA(MDS)	CDBHD140L-HF Thru. CDBHD1100L-HF
CDBHD240-G Thru.CDBHD2100-G	TO-269AA(MDS)	CDBHD240-HF Thru. CDBHD2100-HF
ACFRA104-G	SMA/DO-214AC	ACFRA104-HF