* RoHS COMPLIANT *

✳ REVISIONS				
LTR	DESCRIPTION	DATE	REVISED	APPROVED

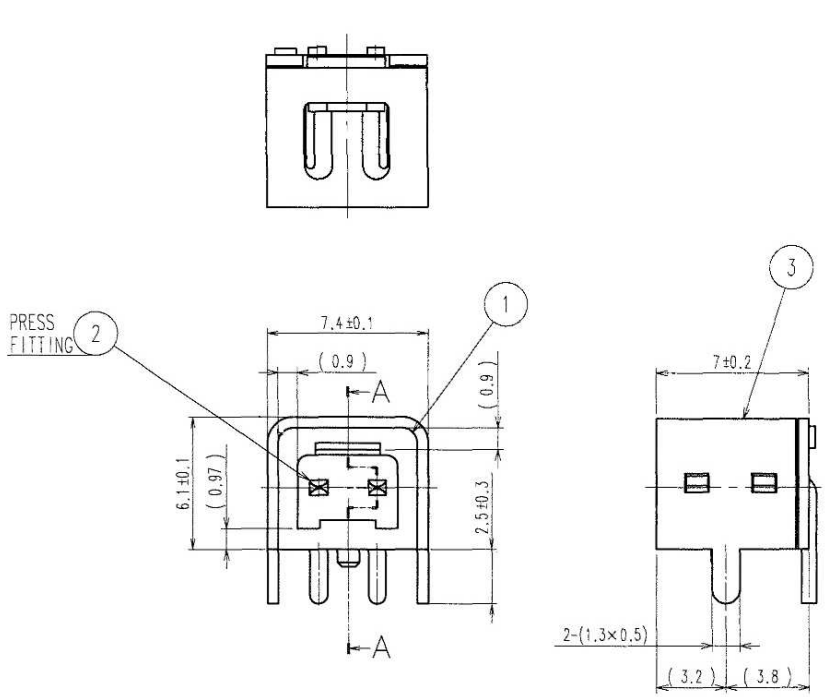

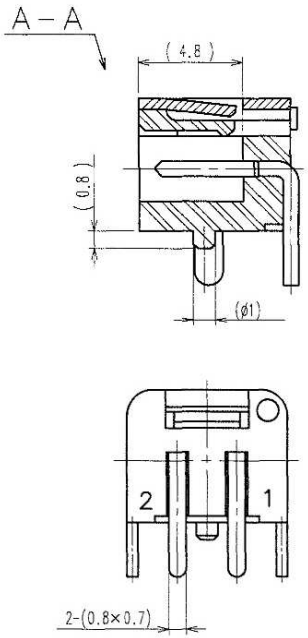

RECOMMENDED PC BOARD HOLE PATTERN

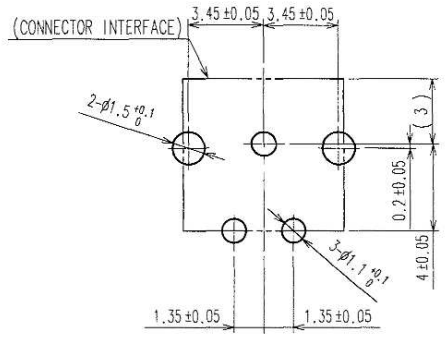

PANEL CUTOUT(REFERENCE)

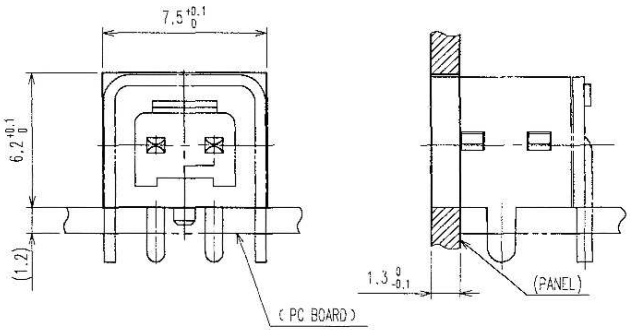

UNLESS OTHERWISE SPECIFIED, TOLERANCE ON DECIMAL: ±0.3

LTR	PART NAME	QTY	MATERIAL	REMARK
3	SHELL	1	C5191	Tin Plated
2	TERMINAL	1	C2680	Ni Plated
1	HOUSING	1	PA9T	BLACK

DWN	LILY	DATE	2024.02.22	3RD ANGLE PROJECTION	NAME: DC POWER JACK
CHKD	ANDY	DATE	2024.02.22		CAT. NO.: DCD-020-219
APVD	JON	DATE	2024.02.22	UNIT: mm	
JKCR Electronics Co., Ltd.					DWN.NO.: M-020-219 001