KARA
KARA COMPONENT TECHNOLOGY CO.,LTD

承　認　書

SPECIFICATION FOR APPROVAL

客戶名稱(CUSTOMER): 鈺緯科技開發股份有限公司

品名(DESCRIPTION): Micro-Fit 3.0 Vertical Header, 3.00mm Pitch, Dual Row, 4 Circuits, with PCB Polarizing Peg, Gold, Glow-Wire Capable, Black

客戶料號(PART NO): 3FM00406020(F0306)

料　　號(PART NO): 43045-0413

送樣日期(DATE):

承認號碼(APPROVED NO):

Kara Component Technology co., Ltd.		Customer Approval	
Prepare	Approval	Check	Approval
Joseph			設計驗證 工程課 2024-12-12 發行 鈺緯科技開發股份有限公司

鉅廣科技有限公司
Kara Component Technology co., Ltd.
23511新北市中和區建八路2號8F-3
8F.-3, No.2, Jian 8th Rd., Zhonghe Dist., New Taipei City 23511
TEL:886-2-8226-9596

Part Number : 430450413
Product Description : Micro-Fit 3.0 Vertical Header, 3.00mm Pitch, Dual Row, 4 Circuits, with PCB Polarizing Peg, Gold, Glow-Wire Capable, Black
Series Number : 43045
Status : Active
Product Category : PCB Headers and Receptacles

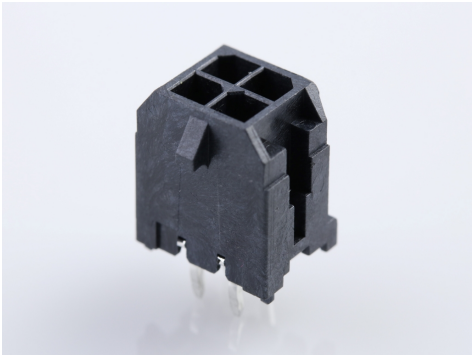

Documents & Resources

Drawings
430450413_sd.pdf
PK-70873-0314-001.pdf

3D Models and Design Files
430450413_stp.zip
SYM-43045-0412-001.zip
SYM-43045-041X-001.zip

Specifications
430450001-PS-KO-000.pdf
430450001-PS-SP-000.pdf
PS-43045-001.pdf
430450006-TS-000.pdf
430450007-TS-000.pdf
TS-43045-001-001.pdf
TS-43045-002-001.pdf
TS-46235-001-001.pdf

Product Environment Compliance

Compliance

GADSL/IMDS	Compliant with Exemption 44; 34; 33
China RoHS	
EU ELV	Not Relevant
Low-Halogen Status	Low-Halogen per IEC 61249-2-21
REACH SVHC	Not Contained per D(2024)4144-DC (27 June 2024)

EU RoHS	Compliant per EU 2015/863

Multiple Part Product Compliance Statements

- Eu RoHS
- REACH SVHC
- Low-Halogen

Multiple Part Industry Compliance Documents

- IPC 1752A Class C
- IPC 1752A Class D
- Molex Product Compliance Declaration
- IEC-62474
- chemSHERPA (xml)

EU RoHS Certificate of Compliance

Part Details

General

Status	Active
Category	PCB Headers and Receptacles
Series	43045
Description	Micro-Fit 3.0 Vertical Header, 3.00mm Pitch, Dual Row, 4 Circuits, with PCB Polarizing Peg, Gold, Glow-Wire Capable, Black
Application	Power, Wire-to-Board

Comments	High Temperature, Square Pin, Offset Through Hole Mounting, Solder Type; This Molex product is manufactured from material that has the following ratings, tested by independent agencies: a) A Glow Wire Ignition Temperature (GWIT) of at least 775 deg C per IEC 60695-2-13. b) A Glow Wire Flammability Index (GWFI) above 850 deg C per IEC 60695-2-12 and hence complies with the requirements set out in the International Standard IEC 60335-1 5th edition - household and similar electrical appliances - safety, section 30 Resistance to heat and fire. The customers using this product must determine its suitability for use in their particular application through testing or other acceptable means as described in end-product glow-wire flammability test standard IEC 60695-2-11 and any applicable product end-use standard(s). If it is determined during the customer's evaluation of suitability, that higher performance is required, please contact Molex for possible product options.
Component Type	PCB Header
Product Name	Micro-Fit 3.0
UPC	800754370561

Agency

CSA	LR19980
UL	E29179

Electrical

Current - Maximum per Contact	8.5A
Voltage - Maximum	600V

Physical

Breakaway	No
Circuits (Loaded)	4
Circuits (maximum)	4
Color - Resin	Black
Durability (mating cycles max)	30

Flammability	94V-0
Glow-Wire Capable	Yes
Mated Height	17.64mm
Material - Metal	Brass
Material - Plating Mating	Gold
Material - Plating Termination	Tin
Material - Resin	High Temperature Thermoplastic
Net Weight	0.729/g
Number of Rows	2
Orientation	Vertical
Packaging Type	Tray
PCB Locator	Yes
PCB Retention	Yes
PCB Thickness - Recommended	1.60mm
Pitch - Mating Interface	3.00mm
Plating min - Mating	0.381µm
Polarized to PCB	Yes
Shrouded	Fully
Stackable	No
Temperature Range - Operating	-40° to +125°C
Termination Interface Style	Through Hole - Kinked Pin

Solder Process Data

Max-Duration	30
Lead-Free Process Capability	SMC&WAVE
Max-Cycle	3
Max-Temp	260

Mates With / Use With

Mates with Part(s)

Description	Part Number
Micro-Fit 3.0 Dual Row Receptacle Housings	43025
Micro-Fit TPA Receptacle Housings	172952

Micro-Fit 3.0 Female-to-Micro-Fit 3.0 Female Off-the-Shelf (OTS) Cable Assemblies	214755
Micro-Fit 3.0 Female-to-Pigtail Off-the-Shelf (OTS) Cable Assemblies	214756

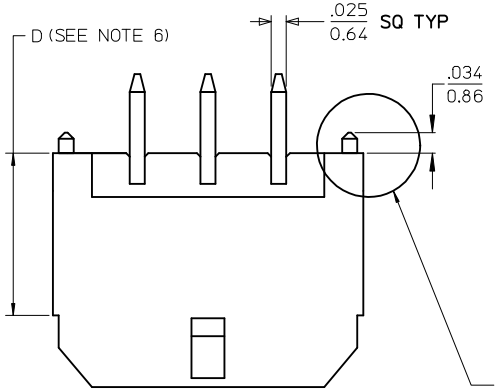

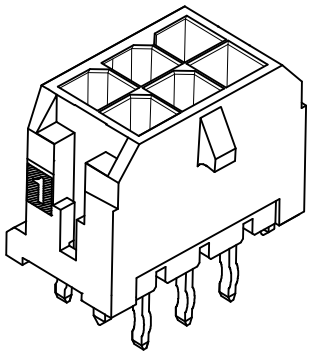

NOTE : (2) POLARIZATION PEGS ARE SHOWN. HOWEVER, ASSEMBLIES MAY BE MANUFACTURED WITH (1) PEG ONLY.

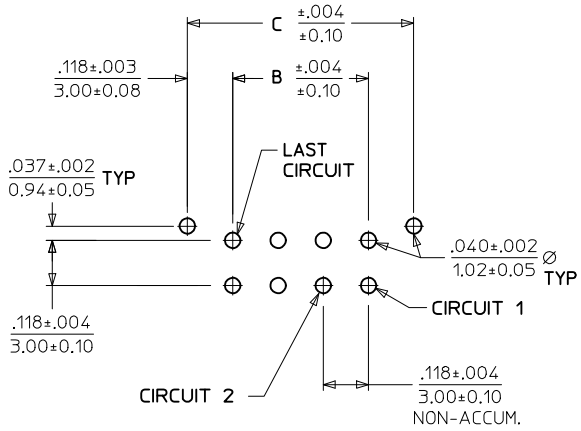

CKTS	A	B	C
02	.262 6.65	NA	.236 6.00
04	.380 9.65	.118 3.00	.354 9.00
06	.498 12.65	.236 6.00	.472 12.00
08	.616 15.65	.354 9.00	.591 15.00
10	.734 18.65	.472 12.00	.709 18.00
12	.852 21.65	.591 15.00	.827 21.00
14	.970 24.65	.709 18.00	.945 24.00
16	1.088 27.65	.827 21.00	1.063 27.00
18	1.206 30.65	.945 24.00	1.181 30.00
20	1.325 33.65	1.063 27.00	1.299 33.00
22	1.443 36.65	1.181 30.00	1.417 36.00
24	1.561 39.65	1.299 33.00	1.535 39.00

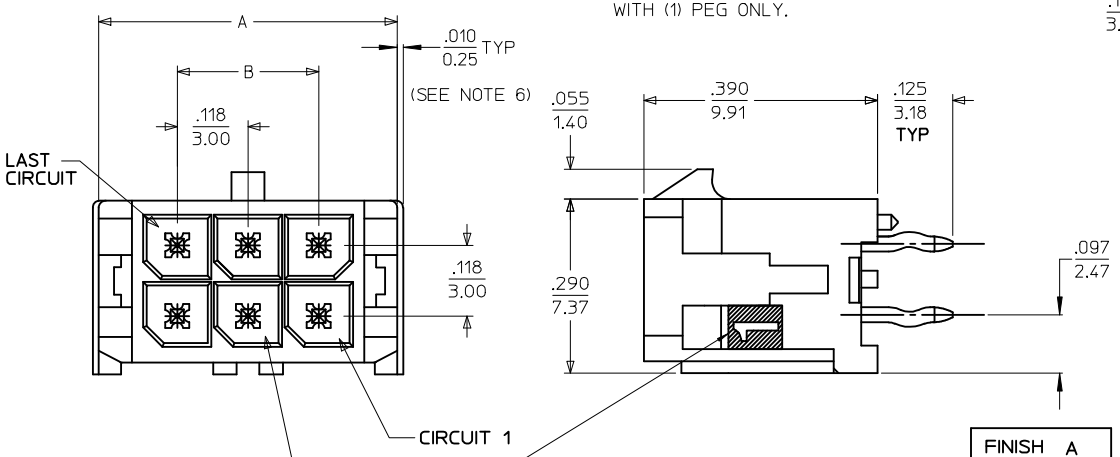

PCB LAYOUT: COMPONENT SIDE
RECOMMEND PCB THICKNESS: .062/1.57

設計驗證
工程課
2024-12-12
發行
鈺緯科技開發股份有限公司

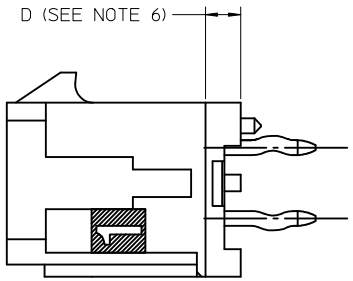

CKTS	FINISH A MATERIAL NO:	FINISH B MATERIAL NO:	FINISH C MATERIAL NO:	FINISH D MATERIAL NO:
02	43045-0212	43045-0213	43045-0214	43045-0311
04	43045-0412	43045-0413	43045-0414	43045-0511
06	43045-0612	43045-0613	43045-0614	43045-0711
08	43045-0812	43045-0813	43045-0814	43045-0911
10	43045-1012	43045-1013	43045-1014	43045-1111
12	43045-1212	43045-1213	43045-1214	43045-1311
14	43045-1412	43045-1413	43045-1414	43045-1511
16	43045-1612	43045-1613	43045-1614	43045-1711
18	43045-1812	43045-1813	43045-1814	43045-1911
20	43045-2012	43045-2013	43045-2014	43045-2111
22	43045-2212	43045-2213	43045-2214	43045-2311
24	43045-2412	43045-2413	43045-2414	43045-2511

3FM00406020 (F0306)

NOTES:

1. HOUSING MATERIAL: GLASS FILLED LIQUID CRYSTAL POLYMER, UL94V-0, COLOR: BLACK
   TERMINAL MATERIAL: BRASS ALLOY
2. FINISH: A = .000060/(0.00152) MIN. REFLOWED MATTE TIN OVER .000050/(0.00127) MIN. NICKEL PLATE. (FINISH IS BRIGHT IN APPEARANCE. THICKNESS AS APPLIED PRIOR TO REFLOW)
   B = .000015/(0.00038) MIN. SELECT GOLD IN CONTACT AREA; .000100/(0.00254) MIN. SELECT MATTE TIN ON SOLDER TAILS; BOTH OVER .000050/(0.00127) MIN. NICKEL PLATE.
   C = .000030/(0.00076) MIN. SELECT GOLD IN CONTACT AREA; .000100/(0.00254) MIN. SELECT MATTE TIN ON SOLDER TAILS; BOTH OVER .000050/(0.00127) MIN. NICKEL PLATE.
   D = .000100/(0.00254) MIN. MATTE TIN OVER .000050/(0.00127) MIN. NICKEL PLATE.
3. PRODUCT SPECIFICATION: PS-43045
4. TRAY PACKAGED: SEE MOLEX DRAWING PK-70873-0314
5. MATES WITH MICRO FIT (3.0) RECEPTACLE SERIES 43025
6. CIRCUIT SIZES 2-6: "D" IS 0.265/6.74 FOR .010/0.25 STEP.
   CIRCUIT SIZES 8-24: "D" IS 0.063/1.60 FOR .010/0.25 STEP.
7. THIS PART CONFORMS TO CLASS B REQUIREMENTS OF COSMETIC SPECIFICATION PS-45499-002.

FINISH A & D
EC NO: UCP2016-4586 2015/12/10
DRWN: JDFOX 2015/12/10
CHKD: SSOUSEK 2016/08/23
APPR: FSMITH 2016/08/23
DESCRIPTION
G1
REV

QUALITY SYMBOLS
E =0
E =0
E =0

GENERAL TOLERANCES (UNLESS SPECIFIED)

	mm	INCH
4 PLACES	± ---	± ---
3 PLACES	± ---	± .010
2 PLACES	± 0.25	± .014
1 PLACE	± 0.36	± ---
0 PLACE	± ---	± ---
ANGULAR ±1/2°		

DRAFT WHERE APPLICABLE MUST REMAIN WITHIN DIMENSIONS

DIMENSION STYLE: IN/MM
SCALE: ---
DESIGN UNITS: METRIC
THIRD ANGLE PROJECTION

DRAWN BY: SAMIEC DATE: 2000/03/15
CHECKED BY: SSOUSEK DATE: 2016/06/01
APPROVED BY: FSMITH DATE: 2016/08/23
MATERIAL NO.: SEE CHART

TITLE: MICRO FIT (3.0) DUAL ROW VERTICAL THRU HOLE HEADER ASS'Y

molex

DOCUMENT NO.: SD-43045-005
SHEET NO.: 1 OF 1
SIZE: C

THIS DRAWING CONTAINS INFORMATION THAT IS PROPRIETARY TO MOLEX INCORPORATED AND SHOULD NOT BE USED WITHOUT WRITTEN PERMISSION

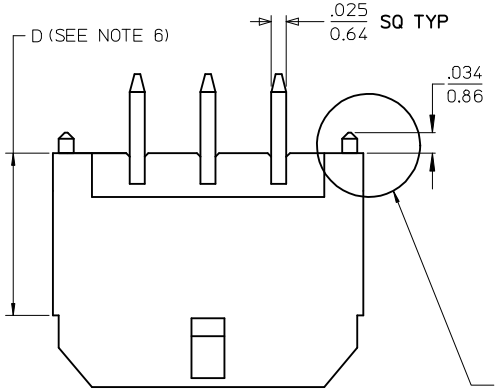

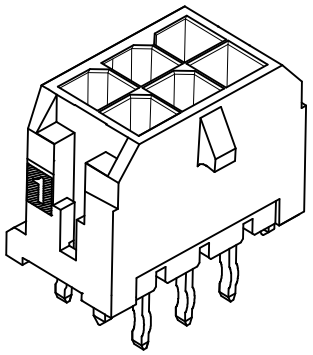

NOTE : (2) POLARIZATION PEGS ARE SHOWN. HOWEVER, ASSEMBLIES MAY BE MANUFACTURED WITH (1) PEG ONLY.

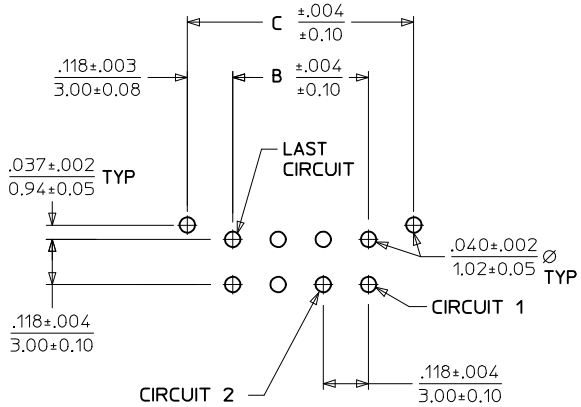

PCB LAYOUT: COMPONENT SIDE
RECOMMEND PCB THICKNESS: .062/1.57

CKTS	A	B	C
02	.262 6.65	 NA	.236 6.00
04	.380 9.65	.118 3.00	.354 9.00
06	.498 12.65	.236 6.00	.472 12.00
08	.616 15.65	.354 9.00	.591 15.00
10	.734 18.65	.472 12.00	.709 18.00
12	.852 21.65	.591 15.00	.827 21.00
14	.970 24.65	.709 18.00	.945 24.00
16	1.088 27.65	.827 21.00	1.063 27.00
18	1.206 30.65	.945 24.00	1.181 30.00
20	1.325 33.65	1.063 27.00	1.299 33.00
22	1.443 36.65	1.181 30.00	1.417 36.00
24	1.561 39.65	1.299 33.00	1.535 39.00

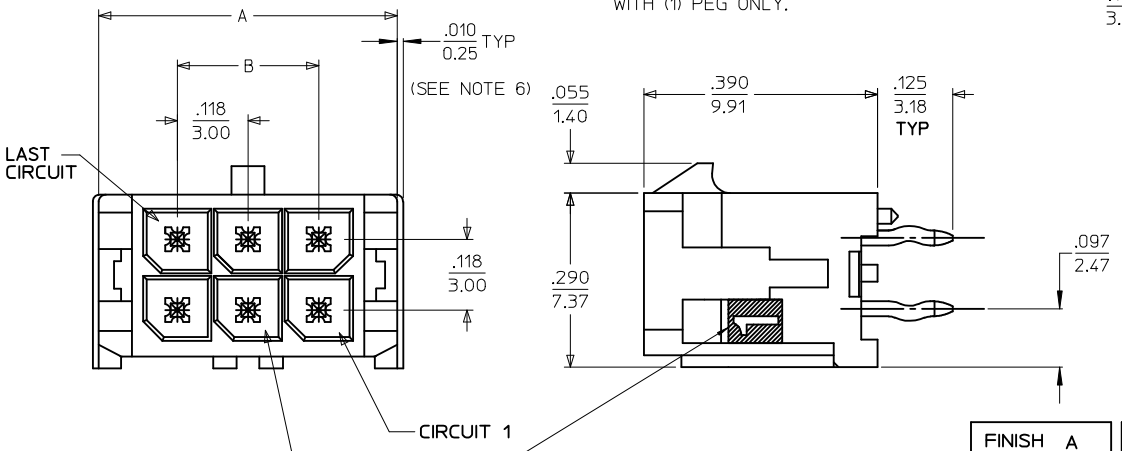

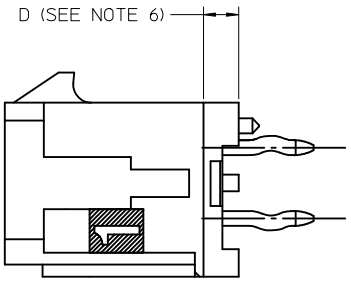

CKTS	FINISH A MATERIAL NO:	FINISH B MATERIAL NO:	FINISH C MATERIAL NO:	FINISH D MATERIAL NO:
02	43045-0212	43045-0213	43045-0214	43045-0311
04	43045-0412	43045-0413	43045-0414	43045-0511
06	43045-0612	43045-0613	43045-0614	43045-0711
08	43045-0812	43045-0813	43045-0814	43045-0911
10	43045-1012	43045-1013	43045-1014	43045-1111
12	43045-1212	43045-1213	43045-1214	43045-1311
14	43045-1412	43045-1413	43045-1414	43045-1511
16	43045-1612	43045-1613	43045-1614	43045-1711
18	43045-1812	43045-1813	43045-1814	43045-1911
20	43045-2012	43045-2013	43045-2014	43045-2111
22	43045-2212	43045-2213	43045-2214	43045-2311
24	43045-2412	43045-2413	43045-2414	43045-2511

NOTES:

1. HOUSING MATERIAL: GLASS FILLED LIQUID CRYSTAL POLYMER, UL94V-0, COLOR: BLACK
   TERMINAL MATERIAL: BRASS ALLOY
2. FINISH: A = .000060/(0.00152) MIN. REFLOWED MATTE TIN OVER .000050/(0.00127) MIN. NICKEL PLATE. (FINISH IS BRIGHT IN APPEARANCE. THICKNESS AS APPLIED PRIOR TO REFLOW)
   B = .000015/(0.00038) MIN. SELECT GOLD IN CONTACT AREA; .000100/(0.00254) MIN. SELECT MATTE TIN ON SOLDER TAILS; BOTH OVER .000050/(0.00127) MIN. NICKEL PLATE.
   C = .000030/(0.00076) MIN. SELECT GOLD IN CONTACT AREA; .000100/(0.00254) MIN. SELECT MATTE TIN ON SOLDER TAILS; BOTH OVER .000050/(0.00127) MIN. NICKEL PLATE.
   D = .000100/(0.00254) MIN. MATTE TIN OVER .000050/(0.00127) MIN. NICKEL PLATE.
3. PRODUCT SPECIFICATION: PS-43045
4. TRAY PACKAGED: SEE MOLEX DRAWING PK-70873-0314
5. MATES WITH MICRO FIT (3.0) RECEPTACLE SERIES 43025
6. CIRCUIT SIZES 2-6: "D" IS 0.265/6.74 FOR .010/0.25 STEP.
   CIRCUIT SIZES 8-24: "D" IS 0.063/1.60 FOR .010/0.25 STEP.
7. THIS PART CONFORMS TO CLASS B REQUIREMENTS OF COSMETIC SPECIFICATION PS-45499-002.

FINISH A & D
EC NO: UCP2016-4586 2015/12/10
DRWN: JDFOX 2015/12/10
CHKD: SSOUSEK 2016/08/23
APPR: FSMITH
DESCRIPTION
REV
G1

QUALITY SYMBOLS
E =0
E =0
E =0

GENERAL TOLERANCES (UNLESS SPECIFIED)

	mm	INCH
4 PLACES	± ---	± ---
3 PLACES	± ---	± .010
2 PLACES	± 0.25	± .014
1 PLACE	± 0.36	± ---
0 PLACE	± ---	± ---

ANGULAR ±1/2°
DRAFT WHERE APPLICABLE MUST REMAIN WITHIN DIMENSIONS

DIMENSION STYLE: IN/MM
SCALE: ---
DESIGN UNITS: METRIC
THIRD ANGLE PROJECTION

DRAWN BY: SAMIEC DATE: 2000/03/15
CHECKED BY: SSOUSEK DATE: 2016/06/01
APPROVED BY: FSMITH DATE: 2016/08/23
MATERIAL NO.: SEE CHART

TITLE: MICRO FIT (3,0) DUAL ROW VERTICAL THRU HOLE HEADER ASS'Y

molex

DOCUMENT NO.: SD-43045-005
SHEET NO.: 1 OF 1
SIZE: C

THIS DRAWING CONTAINS INFORMATION THAT IS PROPRIETARY TO MOLEX INCORPORATED AND SHOULD NOT BE USED WITHOUT WRITTEN PERMISSION

Product Compliance Statement

Dec 11, 2024

Molex is committed to managing the use of chemical substances in accordance with governmental regulations, industry standards, and customer-specific requirements in order to protect the environment. For each part listed, this document provides:

• **EU RoHS Compliance Status.** EU RoHS status is declared per Directive 2011/65/EU and its subsequent amendments, including the Directive EU 2015/863 which additionally prohibited four phthalates. Homogeneous materials of parts that are compliant to this legislation have less than 0.1% by weight each of lead, mercury, hexavalent chromium, PBB, PBDE, DBP, BBP, DIBP, DEHP, and 0.01% by weight of cadmium. In situations where an exemption applies , the preceding limits, corresponding to the exempted substance(s), may be higher.

• **EU REACH SVHC Content.** Substances of Very High Concerns (SVHCs) are declared if above 0.1% of the article per Regulation (EC) No. 1907/2006 and its subsequent amendments. The Candidate List of SVHCs is continually updated at https://echa.europa.eu/candidate-list-table.

• **Low-Halogen Status.** To comply with JS709C, JEDEC JEP 709, and IEC61249-2, homogeneous materials of parts that are considered Low-Halogen have less than 0.09% by weight each of bromine and chlorine, and less than 0.15% by weight of the sum of bromine and chlorine.

Molex's sole liability for incorrectly certifying a product shall be either replacement of the Molex product or, alternatively and in the sole discretion of Molex, return of the purchase price paid for the relevant Molex product.

For additional information regarding Molex's environmental initiatives and further explanation of this information, please visit www.molex.com



Haim Eliyahu

Director, Global Product Stewardship

Table A

Molex P/N	Part Description	RoHS Compliance Status	REACH SVHC	Low-Halogen Status
430450413	Micro-Fit 3.0 Vertical Header, 3.00mm Pitch, Dual Row, 4 Circuits, with PCB Polarizing Peg, Gold, Glow-Wire Capable, Black	Compliant	Not Contained per D(2024)4144-DC (27 June 2024)	Low-Halogen

RoHS Certificate of Compliance

12/11/2024

Molex is committed to managing the use of chemical substances in accordance with governmental regulations, industry standards, and customer-specific requirements in order to protect the environment. For each part listed, this document provides:

- **EU RoHS Compliance Status.** EU RoHS status is declared per Directive 2011/65/EU and its subsequent amendments, including the Directive EU 2015/863 which additionally prohibited four phthalates. Homogeneous materials of parts that are compliant to this legislation have less than 0.1% by weight each of lead, mercury, hexavalent chromium, PBB, PBDE, DBP, BBP, DIBP, DEHP, and 0.01% by weight of cadmium. In situations where an exemption applies, the preceding limits, corresponding to the exempted substance(s), may be higher.

Molex's sole liability for incorrectly certifying a product shall be either replacement of the Molex product or, alternatively and in the sole discretion of Molex, return of the purchase price paid for the relevant Molex product.

For additional information regarding Molex's environmental initiatives and further explanation of this information, please visit www.molex.com

Haim Eliyahu

Director, Global Product Stewardship

Table A

Molex Part Number	Part Description	RoHS Compliance Status
430450413	Micro-Fit 3.0 Vertical Header, 3.00mm Pitch, Dual Row, 4 Circuits, with PCB Polarizing Peg, Gold, Glow-Wire Capable, Black	Compliant

Molex, LLC.
Product Compliance

Molex and EU RoHS

The European Union Restriction of Hazardous Substances (RoHS) recast, Directive 2011/65/EU, entered into force on 21 July 2011. Additionally, the European Union Commission Delegated Directive EU 2015/863 amending Annex II of Directive 2011/65/EU, adopted on 31 December 2016. The recast directive includes additional obligations for manufacturers of electrical and electronic equipment (EEE). The amendment to Annex II adds four more substances (phthalates) to be restricted: DEHP, BBP, DBP, and DIBP from 22 July 2019 other than categories 8 and 9, which will be restricted from 22 July 2021. As a manufacturer of components used by EEE customers, many obligations do not apply directly to Molex. The recast directive, including the amendment obligations and their impact to Molex, are discussed below.

Substance Restrictions
Amendment EU 2015/863 added four more substances to be restricted, making a total of ten substances: the same six substances from the recast (listed in Annex II), and four phthalates: DEHP, BBP, DBP, DIBP restricted by 22 July 2019. All components of EEE sold by Molex that met the original RoHS substance restrictions will also meet the newly added substance restrictions per EU 2015/863.

Substance Management
To demonstrate compliance, Article 16(2) of RoHS states "*Materials, components and EEE on which tests and measurements demonstrating compliance with the requirements of Article 4 have been performed, or which have been assessed, in accordance with harmonised standards (EN 50581), shall be presumed to comply with the requirements of RoHS.*" Thus, in accordance with the harmonized standard EN 50581, substance testing is not required to prove compliance against RoHS. Nonetheless, Molex has already established a robust process to manage compliance to the legal RoHS requirements, which includes proactively collecting and proper management of supplier technical documentation (Molex Chemical Substance Specification – For Customers). While laboratory testing is not required by the RoHS directive, the customer may choose to conduct additional testing at their own expense.

Exemptions
The majority of Molex components used in EEE do not require an exemption to substance restrictions. Molex can identify when an exemption is used, and will work with customers to address expiring exemptions. In addition, Molex monitors exemptions' expiry dates and applications for renewals to ensure proper and manageable exemption transitions, when applicable.

CE Mark and Declaration of Conformity
As Molex primarily manufactures components (which are not EEE directly within scope of the RoHS directive), Molex cannot affix a CE mark to these components of EEE or create a Declaration of Conformity (DoC). Molex will continue to identify components of EEE that meet the RoHS substance restrictions and therefore can be used in products within the EU RoHS scope.

Cables
According to the RoHS 2 FAQ, finished cables are considered EEE.

- When a cable is used internally, the CE mark and DoC of the EEE also cover the internal cable; there are no additional obligations for the internal cable.
- When a cable is sold together or marketed/shipped for use with an EEE, the CE mark and DoC of the EEE also cover the cable; a separate CE mark and DoC are not required for the cable.
- A CE mark and DoC are required when an external finished cable is placed on the market separately and is not part of another EEE. In these cases, when Molex manufactures EEE (such as a finished cable) on behalf of a customer, Molex will affix a CE mark when required by the customer.

To obtain EU RoHS compliance statements and/or other compliance documents, please visit Molex online compliance tool. For additional information regarding Molex's environmental initiatives please visit Molex Ecocare.