Note:

1. Material:

⑥ * Insulation: High Temperature Plastic 94V-0 ,Color Nature(Halogen-Free)

* Contact: Brass with Matte Tin plated

* TAB: Brass with Matte Tin plated

Dim \ Circuits	TOLERANCE 2~6P	7~10P	11~16P	②
A	±0.10	±0.15	±0.20	

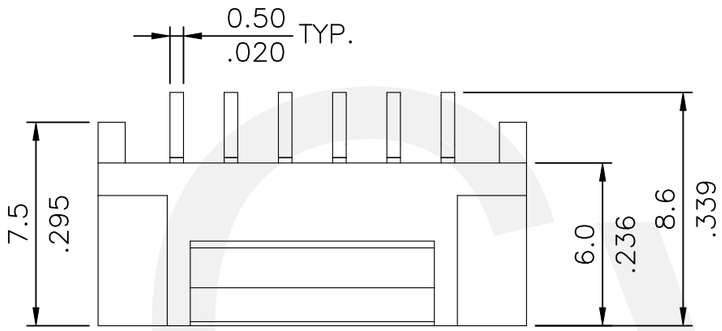

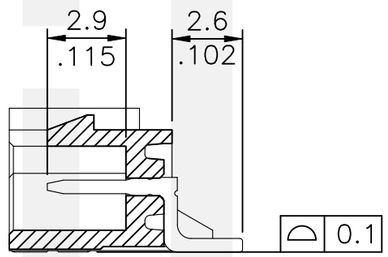

SEC.:X-X

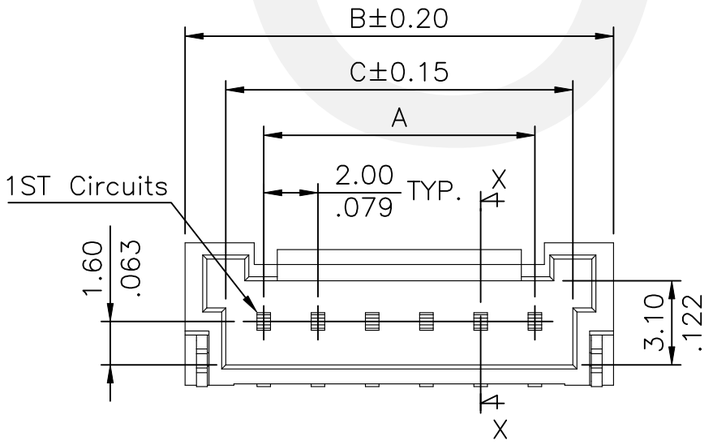

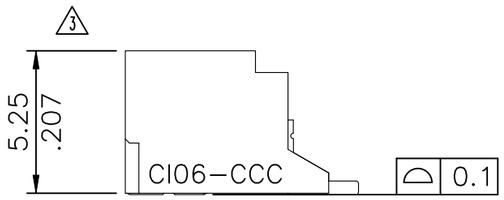

A = 2.00 x No. of Spaces

① B = A + 5.8

① C = A + 2.8

② * Available in 2 through 16 circuits

Ordering Code:

CI06	**	M	1	H	*	0	-NH
①	②	③	④	⑤	⑥	⑦	⑧

① Series No.

② No. of Circuits:

③ Contacts Type: M= SMT

⑤④ Plating: 1= Matte Tin Plating over Nickel

⑤ Type: H= Right angle

⑥ Packing Options:

R= Tape & Reel

T= Tube Packing

⑦ Option: 0= Standard

⑧ NH= For Lead Free Reflow Process and Halogen-Free

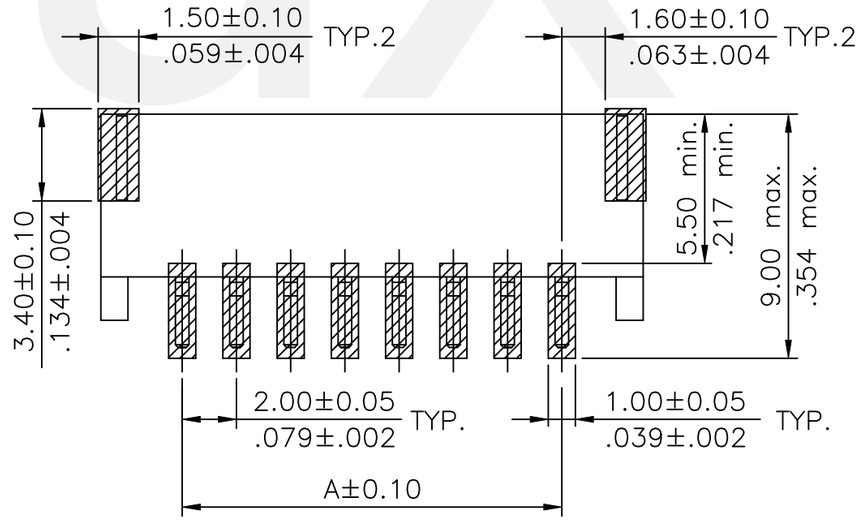

Sold Pad Pattern

Halogen-Free | Lead Free Process | RoHS Compliant

SYM	NAME	DATE	REVISIONS
⑥	Wayne	10/14-24'	ECRT124060/ECNT124290
⑤	Amy	11/6-23'	ECNT123179/ECRB123029
④	Enya	3/8-13'	ECN13056-0/ECR13007-0
③	Sandy	6/18-10	ECN10211

CviLux Corp 2024/10/17 ISSUED

		DATE
DRAWN BY:	Wayne	10/14-24'
ENGINEER:	Sun	10/14-24'
CHECKED BY:	Eisley	10/14-24'
APPROVED BY:	Eisley	10/14-24'

UNIT: mm / inch

TOLERANCE UNLESS OTHERWISE SPECIFIED

.X	± 0.30/.012	X°	± 1°
.XX	± 0.20/.008	.X°	±
.XXX	± 0.10/.004	.XX°	±

TITLE: 2.00mm PITCH SIDE ENTRY SMT HEADER

MATERIAL:

FINISH:

瀚荃股份有限公司
CviLux Corporation

DRAWING NO.	CI0619SG	PART NO.	CI06**M1H*0-NH
SCALE	3 / 1	SHEET	1 OF 2

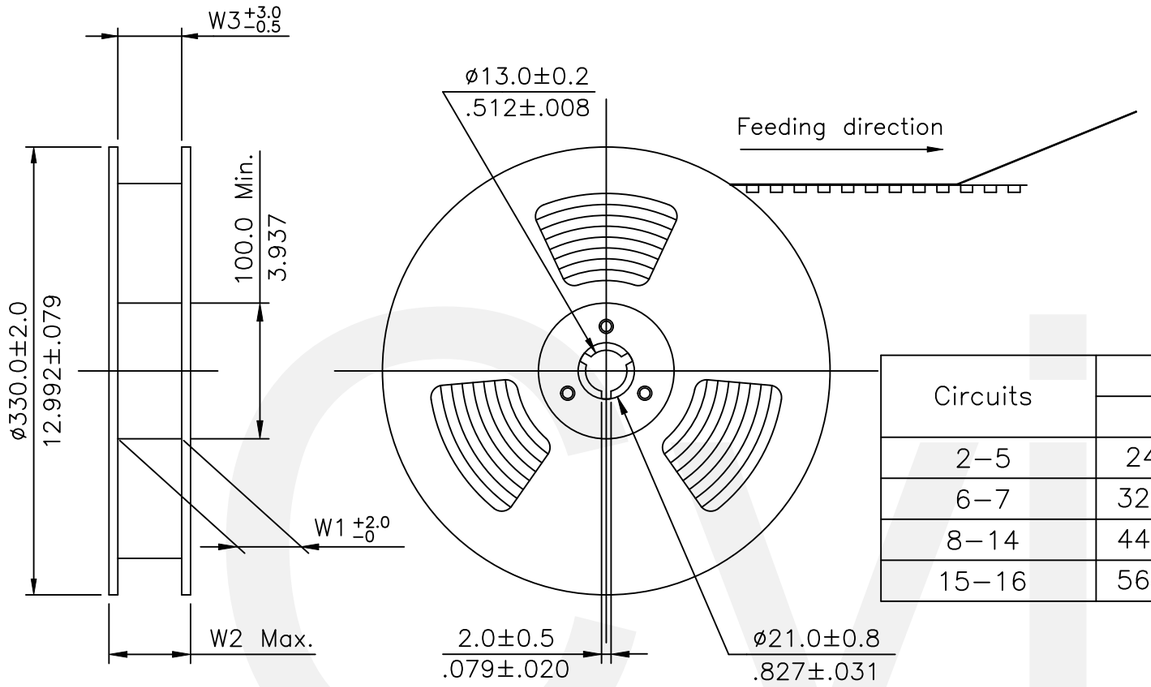

NOTE :

⚠5 * Reel Material : HIPS

* Carrier Material : Transparent Anti-static Polysyrene.

* Cover Tape Material : Polyester

* Cover Tape Peel Strength : 0.1N ~ 1.3N

* Carrier camber is within 1mm in 100mm

⚠5 * All dimensions meet EIA-481 requirements.

* Quantity : 700 PCS/Reel

Circuits	Dimension					Packing (Reel/Carton)
	E	F	W1	W2	W3	
2~5	24.0(.945)	–	24.5(.965)	30.5(1.200)	24.5(.965)	9
6~7	32.0(1.260)	28.40(1.118)	32.5(1.280)	38.5(1.516)	32.5(1.280)	7
8~14	44.0(1.732)	40.40(1.596)	44.5(1.752)	50.5(1.988)	44.5(1.752)	5
15~16	56.0(2.205)	52.40(2.063)	56.5(2.224)	62.5(2.461)	56.5(2.224)	4

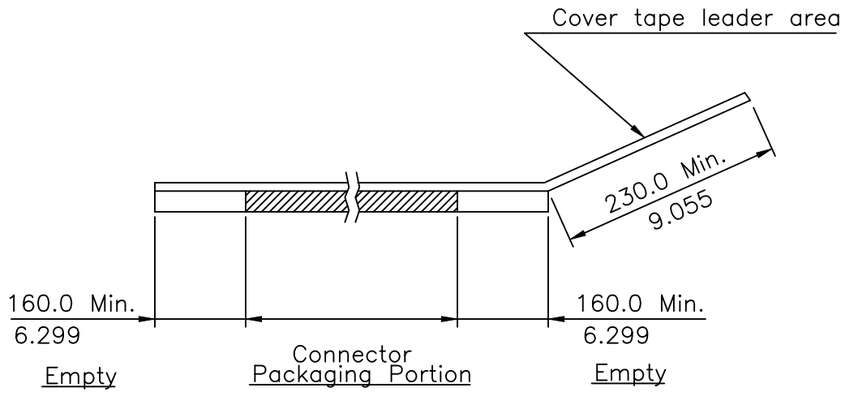

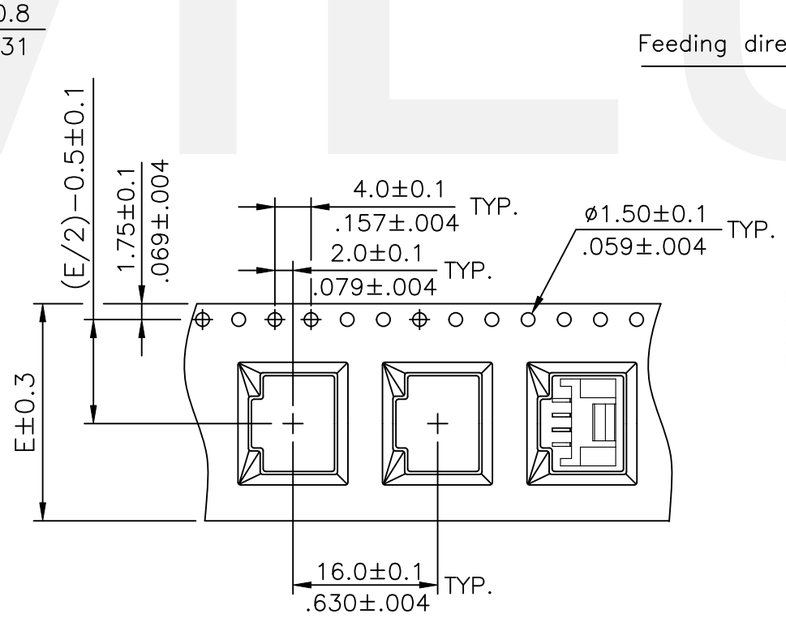

WIDTH : 24 mm Carrier

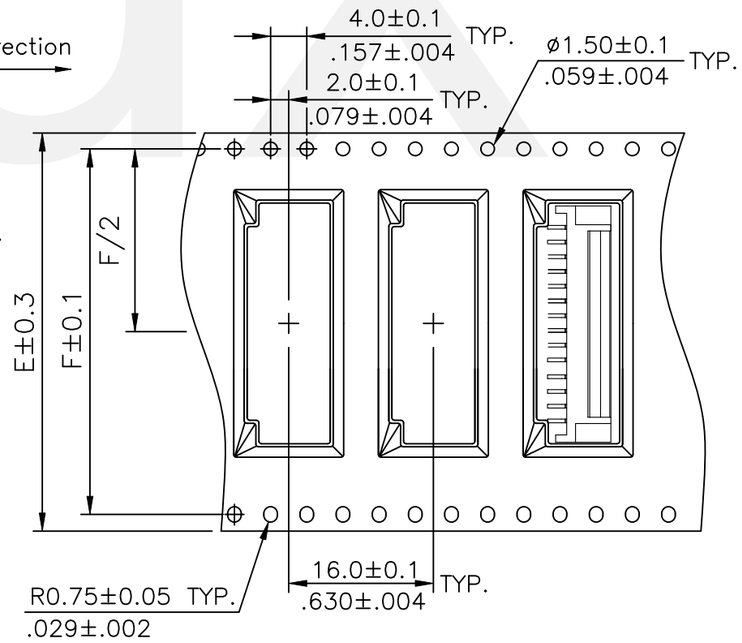

WIDTH : 32,44,56 mm Carrier

RoHS Compliant

SYM	NAME	DATE	REVISIONS
⚠6	Wayne	10/14-24'	ECRT124060/ECNT124290
⚠5	Amy	11/6-23'	ECNT123179/ECRB123029
⚠4	Enya	3/8-13'	ECN13056-0/ECR13007-1
⚠3	Sandy	6/18-10	ECN10211

CviLux Corp 2024/10/17 ISSUED

		DATE
DRAWN BY:	Wayne	10/14-24'
ENGINEER:	Sun	10/14-24'
CHECKED BY:	Eisley	10/14-24'
APPROVED BY:	Eisley	10/14-24'

UNIT: mm / inch

TOLERANCE UNLESS OTHERWISE SPECIFIED

.X ±	X.° ± 1°
.XX ±	.X° ±
.XXX ±	.XX° ±

TITLE: 2.00mm PITCH SIDE ENTRY SMT HEADER

MATERIAL:

FINISH:

瀚荃股份有限公司
CviLux Corporation

DRAWING NO.	CI0619SG	PART NO.	CI06**M1H*0-NH
SCALE		SHEET 2 OF 2	