*此料為

3CE4701HM3M (CA (47U,100V,RZW,10*12.5,90 Deg,LELON))

RZW470M2ABU-1012

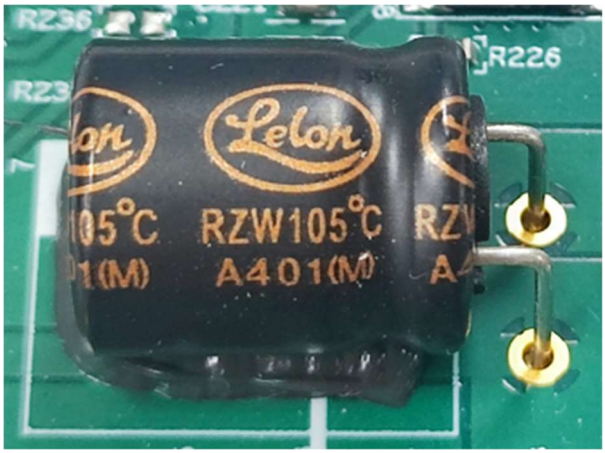

設計驗證
工程課
2025-01-14
發行

Dwg. No. :A24-0809
承認字號
Issued Date: 2024/04/03

Customer : DIVA Laboratories.Ltd.
(客 戶)

Part No. :
(貴公司料號)

SPECIFICATION FOR APPROVAL
承 認 書

Description : ALUMINUM ELECTROLYTIC CAPACITORS
(零 件 名 稱)

Lelon Series : RZW Series
(立 隆 系 列)

Lelon Part No.: RZW470M2ABU-1012 3CE4701HM3M(C0121)
(立 隆 料 號)

LELON ELECTRONICS CORP.
立 隆 電 子 工 業 股 份 有 限 公 司

Headquarters
147, Sec. 1, Guoguang Rd., Dali District, Taichung, Taiwan
TEL: +886-4-2418-1856 FAX: +886-4-2418-1906

Manufacturing Sites

☐ Lelon Electronics Corp.
147, Sec. 1, Guoguang Rd., Dali District, Taichung, Taiwan
TEL: +886-4-2418-1856 FAX: +886-4-2418-1906

■ Lelon Electronics (Huizhou) Co., Ltd.
Taiyang Industrial Zone, Baihua Town, Huidong County, Huizhou City, Guangdong, China
TEL: +86-752-8768222 FAX: +86-752-8768199

☐ Lelon Electronics (Suzhou) Co., Ltd.
1220, Zhongshan North Rd., Wujiang Economic and Technological Technological Development Zone Suzhou City, Jiangsu, China
TEL: +86-512-63457588 FAX: +86-512-63457791

■ Lelon Electronics Technology (Suzhou) Co., Ltd.
788, Xinzi Rd, Wujiang Economic and Technological Development Zone, Suzhou City, Jiang Su, China
TEL: +86-512-63567588

Approval 核 准	Check 確 認	Design 作 成
研發部 APR 03 2024 周金龍	研發部 APR 03 2024 張 陸	研發部 APR 03 2024 蔡麗華

Approval Signatures
貴公司承認印

設計驗證
工程課
2025-01-14
發行
鈺鐘科技開發股份有限公司

Please Return One Copy with Your Approval
承 認 後 請 寄 回 本 圖 一 份

Part Numbering System

Product Code Guide – Radial Type

RZW series	47μF	±20%	100V	Bent and Cutting Lead (Leads in Left Direction)	Gas type	10φ×12.5L	General purpose	
RZW	**470**	**M**	**2A**	**BU**	**-**	**1012**		
□□□	□□□	□	□□	□□	□	□□□□	□	
①	②	③	④	⑤	⑥	⑦	⑧	⑨
Series	Capacitance	Capacitance Tolerance	Rated Voltage	Lead Configuration and Package	Rubber Type	Case size	Application	Supplement Code

① Series: Series is represented by a three-letter code. When the series name only has two letters, use a hyphen, "-", to fill the third blank.

② Capacitance: Capacitance in μF is represented by a three-digit code. The first two digits are significant and the third digit indicates the number of zeros following the significant figure. "R" represents the decimal point for capacitance under 10μF.

Example:

Capacitance	0.47	1	4.7	10	47	100	470	1,000	4,700	10,000
Part number	R47	010	4R7	100	470	101	471	102	472	103

③ Tolerance:

K = -10% ~ +10%	M = -20% ~ +20%	V = -10% ~ +20%

④ Rated voltage:

Rated voltage in volts (V) is represented by a two-digit code

Rated Volt. (V)	4	6.3	10	16	25	35	50	63	100
Code	0G	0J	1A	1C	1E	1V	1H	1J	2A
Rated Volt. (V)	160	200	250	350	400	420	450		
Code	2C	2D	2E	2V	2G	2P	2W		

⑤ Lead configuration and package:

BK = Bulk Package	TA = Forming Lead Taping
FC = Formed and Cutting Lead	SA = Straight Lead Taping
CC = Cutting Lead	SD = Bent Cathode Lead
SF = Snap-in and Forming-Cutting Lead	BC = Bent and Cutting Lead (Leads in Right Direction)
SC = Snap-in and Cutting Lead	BU = Bent and Cutting Lead (Leads in Left Direction)

⑥ Rubber type:

– = Gas escape type	F = Flat rubber bung

Note : For case size of 3φ×5L, 12.5φ×16L, 16φ×16L, 16φ×20L, 18φ×16L, 18φ×20L , 18φ×25L of aluminum e-caps, flat rubber bung is the standard design, In these cases, use a hyphen, "-", in this digit.

⑦ Case size: The first two digits indicate case diameter and the last two digits indicate case length in mm.

φD×L	4×5	4×7	5×5	5×7	5×11	6.3×5	6.3×7	6.3×11	6.3×15	8×5
Code	**0405**	**0407**	**0505**	**0507**	**0511**	**0605**	**0607**	**0611**	**0615**	**0805**
φD×L	8×7	8×9	8×11.5	8×15	8×20	10×9	10×12.5	10×16	10×20	10×25
Code	**0807**	**0809**	**0811**	**0815**	**0820**	**1009**	**1012**	**1016**	**1020**	**1025**
φD×L	10×30	10×35	10×40	10×45	10×50	12.5×16	12.5×20	12.5×25	12.5×30	12.5×35
Code	**1030**	**1035**	**1040**	**1045**	**1050**	**1316**	**1320**	**1325**	**1330**	**1335**
φD×L	12.5×40	12.5×45	12.5×50	16×16	16×20	16×25	16×31.5	16×35.5	16×40	16×45
Code	**1340**	**1345**	**1350**	**1616**	**1620**	**1625**	**1632**	**1636**	**1640**	**1645**
φD×L	16×50	18×16	18×20	18×25	18×31.5	18×35.5	18×40	18×45	18×50	22×40
Code	**1650**	**1816**	**1820**	**1825**	**1832**	**1836**	**1840**	**1845**	**1850**	**2240**
φD×L	22×45	25×40	25×45							
Code	**2245**	**2540**	**2545**							

Note: When a case size is required and not shown in the table, please contact with us for further discussion.

⑧ Application:

None = General purpose	K = Automotive (AEC-Q200)

* When a supplement code following a blank digit code of Pb-free leader and PET sleeve (standard design), use a hyphen, "-", to fill the blank digit. When the automotive control code is required, please contact with us for further discussion.

⑨ Supplement code (Optional):

For special control purposes

Lelon P/N： RZW470M2ABU-1012	LELON ELECTRONICS CORP. RZW 47 μF / 100 V – 10 φ × 12.5 L	Page：1 / 1

CUSTOMER :
CUSTOMER P/N:

PRODUCT DIMENSIONS

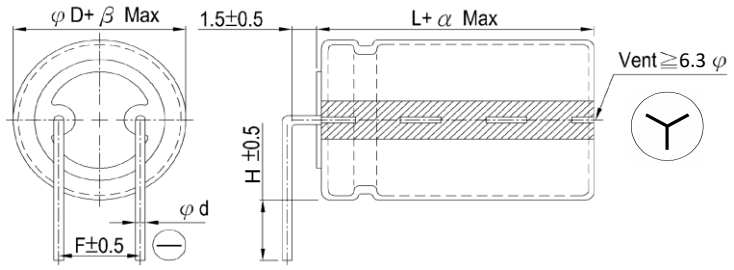

Unit: mm

φD	10
L	12.5
F	5.0
φd	0.6
α	1.5
β	0.5
H	5.0

Items	Performance	
Rated Voltage V_R	100 V	
Capacitance C_R	47 μF	(120 Hz, 20℃)
Category Temperature Range	-40℃ ~ +105℃	
Capacitance Tolerance	-20 % ~ +20 %	(120 Hz, 20℃)
Surge Voltage V_S	115 V_{DC}	
Leakage Current (20℃)	I_{LEAK} ≦47 μA	After 2 minutes
Tan δ	≦0.08	(120 Hz, 20℃)
Impedance max	＜0.45 Ω	(100kHz, 20℃)
Ripple Current ($I_{AC, R}$/rms)	400 mA	(100kHz, 105℃)
Low Temperature Characteristics at 120 Hz	Rated Voltage: 100 Impedance ratio $Z_{(-40℃)}/Z_{(+20℃)}$: 3	
Ripple Current (mA) and Frequency Multipliers	Frequency (Hz): 120 / 1k / 10k / 100k up Multiplier: 0.50 / 0.73 / 0.92 / 1.00	
Ripple Current & Temperature Multipliers	Ambient Temp: 40℃ / 60℃ / 70℃ / 85℃ / 105℃ Temperature coefficient: 2.5 / 2.0 / 1.7 / 1.4 / 1.0	
Endurance and Shelf Life Test	See table below	
Solder Heat-resistance	During dip of wave soldering temperature at the capacitors terminals should be less than 260±5℃, 10±1seconds.	
Standards	JIS C 5101-4, IEC 60384-4	
Remarks	RoHS Compliance , Halogen-free	

Items	Endurance	Shelf Life Test
Test Time	7,000 Hrs at 105℃； V_R, $I_{AC, R}$	1,000 Hrs at 105℃
Cap. Change	Within ±25 % of initial value	Within ±25 % of initial value
Tan δ	Less than 200% of specified value	Less than 200% of specified value
Leakage Current	Within specified value	Within specified value

*Please refer to “ Precautions and Guidelines for Aluminum Electrolytic Capacitors ” section in Lelon's catalog for further details.

Publication Date	April 03, 2024	Approval Signatures:	Approved	Checked	Designed
Revision Date			研發部 APR 03 2024 周金龍	研發部 APR 03 2024 張 陸	研發部 APR 03 2024 蔡麗華
Version No.	1	Please return one copy with your approval			

Diagram of Dimensions:

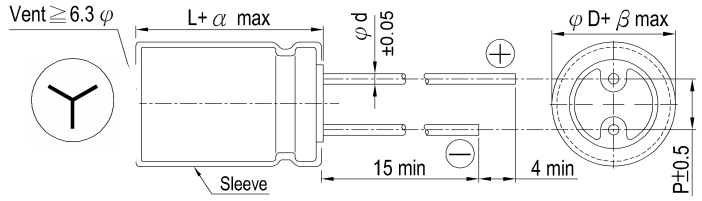

Lead Spacing & Diameter Unit: mm

φD	5	6.3	8	10	12.5	16	18
P	2.0	2.5	3.5	5.0	5.0	7.5	7.5
φd	0.5		0.6			0.8	
α	L＜20: 1.5, L≧20: 2.0						
β	0.5						

The case size of 12.5×16, 16×16, 16×20, 18×16, 18×20 and 18×25 are suitable for below diagram:

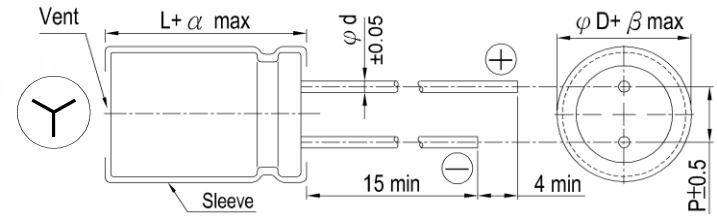

Marking:

Each capacitor shall be marked with the following information.

(The Front)

47μF 100V → Rated capacitance and rated voltage

 → Polarity

(The Back)

 → Brand name

RZW 105℃ → Series & maximum operating temperature

A 4 01 (M) → Date code

- Tolerance of capacitance
- Week of manufacture
- The last digit of A. D.
- Place of manufacture
  - T: Taiwan
  - H: Huizhou
  - A: Suzhou

Appearance:

Marking color: Golden

Sleeve color: Black -------- RZW Series

Sleeve material: PET

Package Quantity:

3. Radial Type in Cutting Pack:

Case Size	pcs / Bag	Inner Box / Carton	Pcs / Carton	Case Size	pcs / Bag	Inner Box / Carton	Pcs / Carton
4 ϕ× 5 ~ 7L	1,000	8	80,000	10 ϕ× 25L	300	8	4,800
5 ϕ× 5 ~ 7L	1,000	8	56,000	10 ϕ× 30 ~ 40L	250	8	4,000
5 ϕ× 11L	1,000	8	40,000	10 ϕ× 45 ~ 50L	200	8	3,200
6.3 ϕ× 5 ~ 7L	1,000	8	40,000	12.5 ϕ× 16 ~ 25L	200	8	3,200
6.3 ϕ× 11L	1,000	8	24,000	12.5 ϕ× 30 ~ 40L	150	8	2,400
6.3 ϕ× 15L	500	8	12,000	12.5 ϕ× 45 ~ 50L	100	8	1,600
8 ϕ× 5 ~ 9L	1,000	8	16,000	16 ϕ× 16 ~ 31.5L	100	8	1,600
8 ϕ× 11.5L	1,000	8	16,000	16 ϕ× 35.5 ~ 40L	75	8	1,200
8 ϕ× 15L	800	8	12,800	16 ϕ× 45 ~ 50L	50	8	800
8 ϕ× 20L	500	8	8,000	18 ϕ× 16 ~ 25L	100	8	1,600
8 ϕ× 25 ~ 30L	500	8	8,000	18 ϕ× 31.5 ~ 35.5L	75	8	1,200
8 ϕ× 35 ~ 50L	250	8	4,000	18 ϕ× 40L	50	8	800
10 ϕ× 9L	500	8	12,000	18 ϕ× 45~ 50L	50	8	400
10 ϕ× 12.5 ~ 16L	500	8	8,000	20 ϕ~ 25ϕ	---	---	400
10 ϕ× 20L	400	8	6,400				

Packing Figure:

a) Inner Box

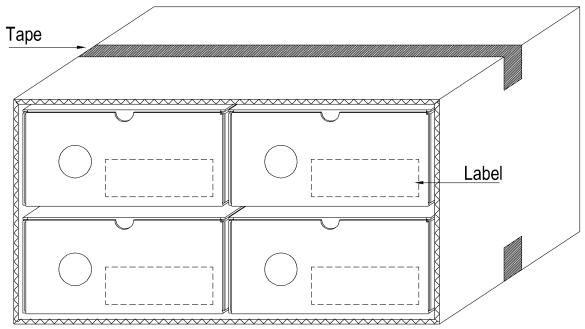

b) Outer Box: Unit: mm

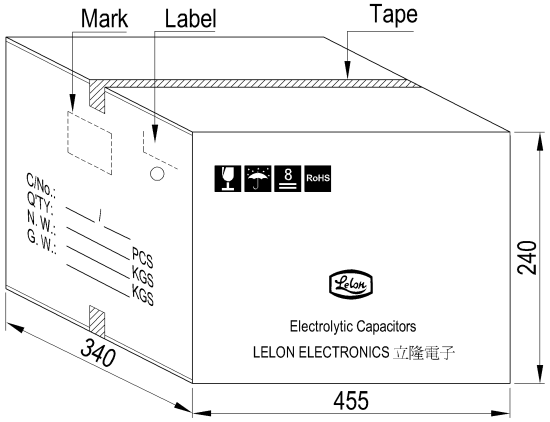

c) Label:

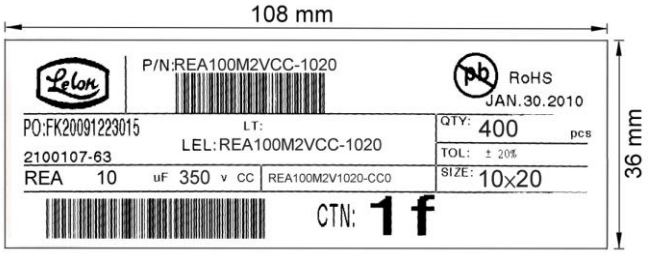

Endurance Characteristic:

No.	Item	Conditions	Specification	
1	Rotational Temperature Test	Capacitor is placed in an oven whose temperature follow specific regulation to " +25℃ (3 min.) → -55/-40℃ (30 min.) → +25℃ (3 min.) → +105℃ (30 min.) → +25℃ (3 min.)", and it is called a cycle. The test totals 10 cycles, and then the capacitor shall be subjected to standard atmospheric conditions for 4 hours, after which measurements shall be made. 1. 6.3 ~ 63V for -55℃ 2. 80 ~ 100V for -40℃	Capacitance change	Within ± 10% of initial value.
			Tan δ	Within specified value
			Leakage Current	Within specified value
			Physical	No broken and undamaged
2	High Temperature Endurance Life Test	1. Capacitors shall be placed in oven with application of ripple current and rated voltage 6.3 ~ 10V: 4,000 +72 / -0 hours for ϕD = 5 ~ 6.3 mm; 6,000 +72 / -0 hours for ϕD = 8 ~ 10 mm; 8,000 +72 / -0 hours for ϕD ≧12.5 mm at 105℃. 16 ~ 100V: 5,000 +72 / -0 hours for ϕD = 5 ~ 6.3 mm; 7,000 +72 / -0 hours for ϕD = 8 ~ 10 mm; 10,000 +72 / -0 hours for ϕD ≧12.5 mm at 105℃. 2. The capacitor should be used within specified permissible ripple current in each standard products table (the sum of DC voltage and AC peak voltage shall be equal to the rated DC working voltage). 3. The specified maximum permissible ripple current in defined at 105℃ and 100k Hz (unless otherwise specified). 4. Then the capacitor shall be subjected to standard atmospheric conditions for 4 hours, after which measurements shall be made.	Capacitance change	Within ± 25% of initial value.
			Tan δ	Less than 200% of specified value
			Leakage Current	Within specified value
			Physical	No broken and undamaged
3	High Temperature Unload Life Test	After 1,000 +48 / -0 hours test at 105℃ without rated voltage. And then the capacitor shall be subjected to standard atmospheric conditions for 4 hours, after which measurements shall be made.	Capacitance change	Within ± 25% of initial value.
			Tan δ	Less than 200% of specified value
			Leakage Current	Within specified value
			Physical	No broken and undamaged
4	Humidity Test	Capacitors shall be exposed for 1,000 +48 / -0 hours in an atmosphere of 90 ~ 95% R. H. at 60 ± 3 ℃. And then the capacitor shall be subjected to standard atmospheric conditions for 4 hours, after which measurements shall be made.	Capacitance change	Within ± 10% of initial value.
			Tan δ	Less than 120% of specified value
			Leakage Current	Within specified value
			Physical	No broken and undamaged
5	Low Temperature Test	Capacitors are placed at -55/-40 ± 3℃ for 96 ± 4 hours. And then the capacitor shall be subjected to atmospheric conditions for 4 hours, after which measurements shall be made. 1. 6.3 ~ 63V for -55℃ 2. 80 ~ 100V for -40℃	Capacitance change	Within ± 10% of initial value.
			Tan δ	Within specified value
			Leakage Current	Within specified value
			Physical	No broken and undamaged
6	Vibration Test	1. Fix it at the point 4 mm or less from body. For ones of 12.5 mm or more in diameter or 25 mm or more length, use separate fixture. 2. Direction and during of vibration: 3 orthogonal directions mutually each for 2 hours (total of 6 hours). 3. Frequency: 10 to 55 Hz reciprocation for 1 minute. 4. Total amplitude: 1.5mm	Capacitance change	Within ± 10% of initial value.
			Tan δ	Within specified value
			Leakage Current	Within specified value
			Physical	No broken and undamaged
7	Solder Heat-Resistance Test	The section of lead below 4 mm from the body of capacitor must be immersed in 260 ± 5℃ liquid tin 10 ± 1 seconds, than, after removing the following specifications shall be satisfied when capacitor terminal is restored to 20℃ over 4 hours.	Capacitance change	Within ± 10% of initial value.
			Tan δ	Within specified value
			Leakage Current	Within specified value
			Physical	No broken and undamaged

<table>
<tr><th>No.</th><th>Item</th><th>Conditions</th><th colspan="2">Specification</th></tr>
<tr><td>8</td><td>Surge Voltage Test</td><td rowspan="2">The capacitor shall be subjected to 1,000 cycles at 15 ~ 35℃. Protective series resistor a 1KΩ each consisting of a charge period of 30 ± 5 seconds, followed by discharge period of approximately 5.5 minutes.

Applying voltage:
<table>
<tr><td>Rated Voltage (V)</td><td>6.3</td><td>10</td><td>16</td><td>25</td><td>35</td><td>50</td><td>63</td><td>80</td><td>100</td></tr>
<tr><td>Surge Voltage (V)</td><td>7.3</td><td>11.5</td><td>18.4</td><td>28.8</td><td>40.3</td><td>57.5</td><td>72.5</td><td>92</td><td>115</td></tr>
</table></td><td>Capacitance change</td><td>Within ± 20% initial value.</td></tr>
<tr><td></td><td></td><td>Tan δ</td><td>Less than 175% of specified value</td></tr>
<tr><td></td><td></td><td></td><td>Leakage Current</td><td>Within specified value</td></tr>
<tr><td></td><td></td><td></td><td>Physical</td><td>No broken and undamaged</td></tr>
<tr><td>9</td><td>Mechanical Characteristics Test</td><td colspan="3">1. The test is about lead tabs strength.
2. Tension Test:
The lead tabs shall not be broken or any malformed condition after fixing capacitor vertically and pressing the following weight on the lead tabs of capacitor for 10 ± 1 secs.
<table>
<tr><th>Lead tabs diameter (mm)</th><th>Weight (Kg)</th></tr>
<tr><td>≦ 0.5</td><td>0.5</td></tr>
<tr><td>0.6 ~ 0.8</td><td>1.0</td></tr>
<tr><td>＞ 0.8</td><td>2.0</td></tr>
</table>
3. Bending Test:
The capacitor is held in vertical position. Attach a weight to the lead tabs, slowly rotate the capacitor 90° to a same way in the opposite direction. Repeat it again (5 secs / cycle). The lead tabs shall not be broken or cracked.
<table>
<tr><th>Lead tabs diameter (mm)</th><th>Weight (Kg)</th></tr>
<tr><td>≦ 0.5</td><td>0.25</td></tr>
<tr><td>0.6 ~ 0.8</td><td>0.50</td></tr>
<tr><td>＞ 0.8</td><td>1.00</td></tr>
</table></td></tr>
<tr><td>10</td><td>Solder ability Test</td><td colspan="3">After the lead wire fully immersed in the solder for 2 ± 0.5 secs at a temperature of 245 ± 5℃, the solder coating must be more than 95%.</td></tr>
<tr><td>11</td><td>Venting Test</td><td colspan="3">1. Applicable to the capacitors with case diameter is 6.3 mm and larger.
2. Test condition:
(1) AC test
The capacitor shall be connected across an applying 50 or 60 Hz AC which is 0.7 times of rated voltage or 250Vrms AC whichever is the lower.
(2) DC test:
Applying inverse DC rated voltage with current to the capacitor.
Where case diameter: ϕD ≦ 22.4 mm: 1 A DC max.
ϕD ＞ 22.4 mm: 10 A DC max.
Note:
(1) When the pressure relief vent operated, the capacitor shall avoid any danger of fire or explosion of capacitor element (terminal and metal foil etc.) or cover.
(2) When the pressure relief device does not open with the voltage applied over 30 minutes, the test is considered to be passed.</td></tr>
<tr><td>12</td><td>Standards</td><td colspan="3">Satisfies Characteristic JIS C 5101-4</td></tr>
</table>

Precautions and Guidelines for Aluminum Electrolytic Capacitors

1. Guidelines for Circuit Design (General / Application guidelines for using electrolytic capacitors)

Selecting of a right capacitor is a key to a good circuit design.

(1) Polarity

Most of the aluminum electrolytic capacitors are polarized. Therefore, they must be installed with the correct polarity. Usage in the reverse polarity results into a short-circuit condition that may damage or even explode the capacitor. In addition, it may influence circuit functionality. A bi-polar electrolytic capacitor should be installed when polarity across a capacitor is unstable / reversible. It should be, however, noted that usage of both polar and bi-polar capacitors are limited to DC applications. They must NOT be used for AC application.

(2) Operating Voltage

Applied DC voltage must not exceed rated voltage of the capacitor. Applying higher voltage than its rated voltage across a capacitor terminals cause overheating due to higher leakage currents and capacitor dielectric/insulation deterioration that will ultimately affect a capacitor's performance. The device, however, is capable of working under short-time transient voltages such as DC transients and peak AC ripples. Reverse voltages higher than 1 Volt within a specified temperature limit or AC voltages are not permissible. Overall, using capacitors at recommended operating voltages can prolong its lifespan. Note that the result of DC voltage overlapped with peak ripple voltage should not exceed rated voltage.

(3) Ripple Current

One of the key functions of any capacitor is removal of the ripple current i.e. the RMS value of AC flowing through a capacitor. But, a ripple current higher than rated ripple current will drop resultant capacitance, cause undue internal heating and thus reduces life span of the capacitor. In extreme cases, internal high temperature will cause the pressure relief vent to operate while destroying the device. Overall, it is important to note that an electrolytic capacitor must be used within a permissible range of ripple current. Indicators like temperature coefficient of allowable ripple current are generally used to determine life expectancy of the capacitor, but to avoid related complex calculations and for the sake of simplicity, we haven't provided temperature coefficient in the catalogue. But it offers key indicators like maximum operating temperature for calculation of life expectancy at a given temperature.

(4) Operating Temperature

Capacitors should be used within a permissible range of operating temperatures. Using capacitor at a higher temperature than maximum rated temperature will considerably shorten its life. In the worst-case scenario, high temperature can cause pressure relief vent to operate and the device will get destroyed. Using capacitors at an ambient room temperature assure their longer life.

(5) Leakage Current

Leakage current flows through a capacitor when DC voltage is applied across it. Leakage current varies with changes in ambient temperature and applied DC voltage level and its time of application. Overvoltage situation, presence of moisture, and thermal stresses, especially occurring during the soldering process can enhance leakage current. Initial leakage current is usually higher and does not decrease until voltage is applied for a certain period of time. It is recommended to keep initial leakage current within specified levels.

(6) Charge and Discharge

Regular electrolytic capacitors are not suitable for rapid charging/discharging circuits. Such usage may either cause reduction in overall capacitance or damage due to overheating. Lelon provides special assistance for selecting appropriate capacitors for rapid charging/discharging circuits.

(7) Surge Voltage

The Surge voltage rating is referred as the maximum DC overvoltage that may be applied to an electrolytic capacitor for a short time interval of 30 seconds at infrequent time intervals not exceeding 5.5minutes with a limiting resistance of 1kΩ. Unless otherwise described on the catalogue or product specifications, please do not apply a voltage exceeding the capacitor's voltage rating. The rated surge voltages corresponding to rated voltages of electrolytic capacitors are presented as follows:

Rated Voltage(V)	6.3	10	16	25	35	50
Surge Voltage(V)	**7.3**	**11.5**	**18.4**	**28.8**	**40.3**	**57.5**

Rated Voltage(V)	63	80	100
Surge Voltage(V)	**72.5**	**92**	**115**

(8) Condition of Use

The capacitors shall NOT be exposed to:

(a) Fluids including water, saltwater spray, oil, fumes, highly humid or condensed climates, etc.
(b) Ambient conditions containing hazardous gases/fumes like hydrogen sulfide, sulfurous acid, nitrous acid, chlorine or bromine gas, ammonia, etc.
(c) Exposed to ozone, ultraviolet rays and radiation.
(d) Severe vibrations or physical shocks that exceeds the specifications mentioned in this catalogue.

(9) Circuit Design Consideration

(a) Please ensure whether application, operating and mounting conditions satisfy the conditions specified in the catalog before installation of a capacitor. Please consult Lelon, if any of the conditions are beyond the conditions specified in the catalog.
(b) Heat-generating components or heat sinks should not be placed closer to Aluminum electrolytic capacitors on the PCB to avoid their premature failure. A cooling system is recommended to improve their reliable working.
(c) Electrical characteristics and performance of aluminum electrolytic capacitors are affected by variation of applied voltage, ripple current, ripple frequency and operating temperature. Therefore, these parameters shall not exceed specified values in the catalog.
(d) Aluminum capacitors may be connected in the parallel fashion for increasing total capacitance and/or for achieving higher ripple current capability. But, such design may cause unequal current flow through each of the capacitors due to differences in their impedances.
(e) When two or more capacitors are connected in series, voltage across each capacitor may differ and fall below the applied voltage. A resistor should be placed across each capacitor so as to match applied voltage with voltage across a capacitor.
(f) Please consult Lelon while selecting a capacitor for high-frequency switching circuit or a circuit that undergoes rapid charging/ discharging
(g) Standard outer sleeve of the capacitor is not a perfect electrical insulator therefore is unsuitable for the applications that requires perfect electrical insulation. Please consult Lelon, if your application requires perfect electrical insulation.
(h) Tilting or twisting capacitor body is not recommended once it is soldered to the PCB.

2. Caution for Assembling Capacitors

(1) Mounting

(a) Aluminum electrolytic capacitors are not recommended to re-use in other circuits once they are mounted and powered in a circuit.

(b) Aluminum electrolytic capacitors may hold static charge between its anode and cathode, which is recommended to be discharged through a 1kΩ resistor before re-use.
(c) A long storage of capacitors may result into its insulation deterioration. This can lead to a high leakage current when voltage is applied that may damage the capacitor. Capacitors following a long storage period must undergo voltage treatment/re-forming.
Capacitors are charged by applying rated DC voltage through a resistor of 1kΩ in series at least for an hour. It is recommended to increase applied voltage gradually using a voltage regulator unit once capacitors are assembled on the board. The charging should be followed by discharging through a 1KΩ resistor.
(d) Please check capacitor rated voltage before mounting.
(e) Please check capacitor polarity before mounting.
(f) Please don't drop capacitor on the floor / hard object.
(g) Please don't deform the capacitor during installation.
(h) Please confirm whether the lead spacing of the capacitors match with its pad spacing / footprint on PCB prior to installation.
(i) Please avoid excessive mechanical shocks to capacitor during the auto-insertion process, inspection or centering operations.
(j) Please don't place any wiring or circuit over the capacitor's pressure relief vent. The pressure relief vent may fail to open if adequate clearance space is not provided. Following table shows minimum clearance space required for different case diameters.

Case Diameter	ϕ6.3 ~ ϕ16	ϕ18 ~ ϕ35	ϕ40 or above
Clearance (min)	2 mm	3 mm	5 mm

(2) Soldering

(a) Please confirm that soldering conditions, especially temperature and contact time are within our specifications. Dip or flow preheat temperature is 150℃ with 120 seconds (max.), the soldering temperature should be limited at 260 ± 5℃ for 10 ± 1 sec while manual soldering using soldering iron should be limited at 350 ± 5℃ for 3 +1/-0 seconds. Please do not dip capacitor body into molten solder. A capacitor's life will be negatively affected if these conditions are violated.
(b) Storage of capacitors in high humidity conditions is likely to affect the solder-ability of lead wires and terminals.
(c) **Reflow soldering should ONLY be used for SMD type capacitors.** The temperature and duration shall not exceed the specified temperature and duration in the specification. If the temperature or duration is higher than the value specified, please consult Lelon before usage.
(d) Standard aluminum electrolytic capacitors are not designed to withstand multiple reflow processes. Please consult Lelon if repeated reflowing is unavoidable.
(e) Incorrect mounting on PCB with improper external strength applied on its lead wires or capacitor body after soldering may damage a capacitor's internal structure, cause short circuit, or lead to high leakage current issues. Do not bend or twist the capacitor body after soldering. Referring to the drawings below only case (i) is recommended.
(i) Correct soldering
(ii) Hole-to-hole spacing on PCB differs from the lead space of lead wires.
(iii) Lead wires are bent after soldering.
(iv) Capacitor body doesn't stand vertical on PCB after soldering.

(3) Cleaning Circuit Boards after Soldering

(a) Following chemicals are not recommended for cleaning: Solvent containing halogen ions, Alkaline solvent, Xylene, Acetone, Terpene, petro-based solvent.
(b) Recommended cleaning conditions:
Fatty-alcohol - Pine Alpha ST-100S, Clean Through-750H and IPA (isopropyl alcohol) are examples of the most acceptable cleaning agents. Temperature of the cleaning agent must not exceed 60℃. Flux content in the cleaning agents should be limited to 2 Wt. %. Overall length of cleaning process (e.g., immersion, ultrasonic or other) shall be within 5 minutes (5 ~ 7mm height within 3 minutes). CFC substitute cleaning agents such as AK225AES can also be used for cleaning. In this case, its temperature shall not exceed 40 C and cleaning process (e.g., immersion, ultrasonic or other) shall be completed within 2 ~ 3 minutes. After cleaning capacitors should be dried with hot air for at least 10 minutes along with the PCB. Temperature of hot air shall not exceed maximum category temperature of the capacitor. Insufficient drying may cause appearance defects, sleeve shrinkage, and bottom-plate bulging. However, usage of this CFC substitute must completely regulated for protection of environment.

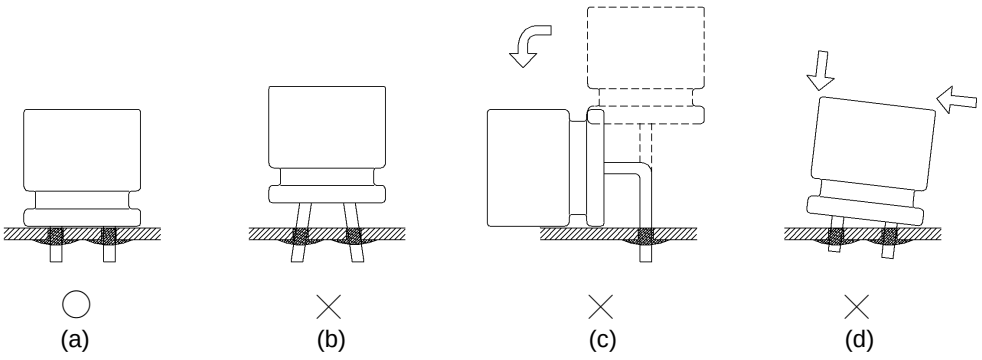

3. Maintenance Inspection

Periodical inspection of aluminum capacitors is absolutely necessary, especially when they are used with industrial equipment. The following items should be checked:
(1) Appearance: Bloated, vent operated, leaked, etc.
(2) Electrical characteristic: Capacitance, Tan δ, leakage current, and other specified items listed in specification.
Lelon recommend replacing the capacitors if any of the abovementioned items fail to meet specifications.

4. Storage

(1) The most suitable conditions for aluminum capacitor storage are 5 ℃ ~ 35℃ and indoor relative humidity less than 75%. High temperature and/or humidity storage is detrimental to the capacitors.
(2) Capacitors shall not be stored in wet or damp atmospheres containing water, brine, fumes or oil.
(3) Capacitors storage area shall neither be exposed to hazardous gases such as hydrogen sulfide, sulfurous acid, nitrous acid, chlorine, ammonium, etc. nor to acidic or alkaline solutions.
(4) Capacitors shall not be exposed to ozone, ultraviolet rays or radiation.

5. Estimation of life time

$$L_r = L_0 \times 2^{\frac{T_{0\max} - T_{r\max}}{10}}$$

L_r: Estimated lifetime (hours)

L_0: Base lifetime specified at maximum operating temperature with applied the DC voltage and the ripple current (hours)

$T_{0\,max}$: The core temperature that rated ripple current applied at maximum operating temperature.

$T_{r\,max}$: The core temperature that applied actual ripple current at ambient temperature.

6. Disposal

Please consult with a local industrial waste disposal specialist when disposing of aluminum electrolytic capacitors.

7. Environmental Consideration

Lelon already have received IECQ QC 080000 certificate. Cadmium (Cd), Lead (Pb), Mercury (Hg), Hexavalent Chromium (Cr^{+6}), PBB, PBDE, DEHP, BBP, DBP and DIBP have never been using in capacitor. If you need “Halogen-free” products, please consult with us.

8. AEC-Q200 Compliance

Automotive Electronics Counsel (AEC) has established various electronic component qualification/reliability standards in order to serve automotive electronics industry. AEC-Q200 standard is dedicated for passive components like capacitors, inductors, etc. and is widely adopted domestically as well as internationally.
Lelon offers compliant product designs and support services to satisfy customers’ product requirements, including the AEC-Q200 required criteria of the reliability tests. Lelon’s capacitors are professionally designed to outperform all requirements of AEC-Q200.

For further details, please refer to

IEC 60384-4- Fixed capacitors for use in electronic equipment – Part 4: Sectional specification – Aluminum electrolytic capacitors with solid (MnO_2) and non-solid electrolyte (Established in January 1995, Revised in March 2007), and

JEITA RCR-2367D- Safety application guide for fixed aluminum electrolytic capacitors for use in electronic equipment (Established in March 1995, Revised in October 2017)