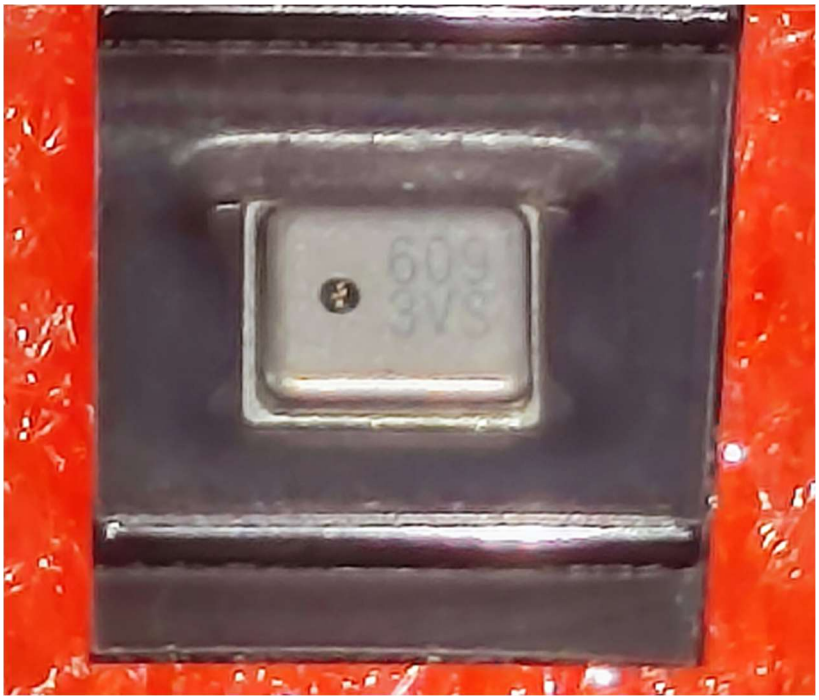

設計驗證
工程課
2025-01-17
發行
旺矽科技開發股份有限公司

A Member of WPG Holdings

AIT group

詮鼎科技股份有限公司
台北市115南港區經貿二路189號13樓
Asian Information Technology Inc.
13F, No. 189, Jingmao 2nd Rd., Nangang Dist.
Taipei, Taiwan
Mobile: 0910088812

APPROVAL SHEET

CUSTOMER: 鈺緯科技開發股份有限公司

BRAND: **Zilltek**

PART NUMBER: **ZTS6011E**

CUSTOMER P/N: **3ZMIC000310** (Z0339)

DATE: **2024/10/18**

零件承認	
核准	負責人
設計驗證 工程課 2025-01-17 發行 鈺緯科技開發股份有限公司	
承認日期	年 月 日

詮鼎科技股份有限公司
Asian Information Technology Inc.
業務人員：陳文豪 手機 ：0910088812

Precision Ultralow Noise Microphone with Top Port and Analog Output

DESCRIPTION

The ZTS6011E is a high quality, high performance, low power analog output top-ported omni-directional MEMS microphone. ZTS6011E consists of a MEMS microphone element and an preamplifier. ZTS6011E has a high SNR and flat wideband frequency response, resulting in natural sound with high intelligibility. Extra EMI filter for RF noise attenuation is built inside. Due to the built-in filter, ZTS6011E shows high immunity to EMI.

The ZTS6011E is available in a thin 3.76mm × 2.95mm × 1.1mm surface-mount package. It is reflow solder compatible with no sensitivity degradation. The ZTS6011E is Halogen and Lead free.

APPLICATIONS

- Mobile telephones
- PDAs
- Digital video cameras
- Portable media devices with audio input

ORDERING INFORMATION

PART	RoHS	Ship, Quantity
ZTS6011E	Yes	Tape and Reel, 5.2K

FEATURES

- 3.76mm×2.95mm×1.1mm surface-mount package
- Stable sensitivity over power supply range of 1.5V-3.6V
- SNR of 59dBA
- Sensitivity of −42dBV
- Low current consumption of <200μA
- Multi Chip Module (MCM) Package

Pins Configuration and Description

Bottom View

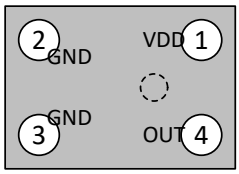

Top Metal Cover is GND.

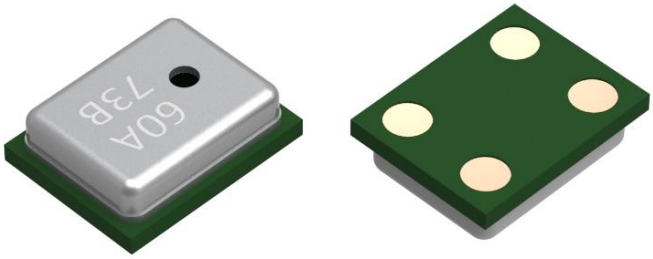

Top **Bottom**

Isometric Views of ZTS6011E Microphone Package
All Pictures shown are for illustration purpose only

Typical Applications

The ZTS6011E output can be connected to a codec microphone input or to a high input impedance gain stage. A dc-blocking capacitor is required at the output of the microphone.

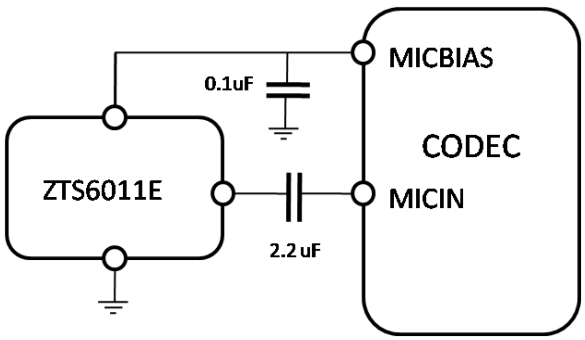

Connect to Audio Codec

Copyright © Zilltek Technology Corp.
5F,No.6-1,Dusing Rd, Hsinchu Science Park,
Hsinchu City 30078,Taiwan.
Tel: (886) 3577 7509; Fax: (886) 3577 7390
Email: sales@zilltek.com

Absolute Maximum Ratings

V_{DD} to Ground ..... –0.5V to +5.0V
Out to Ground ..... –0.3V to V_{DD} +0.3V
Input Current ..... ±5mA
Operating Temperature Range ..... –40°C to +125°C
Storage Temperature Range ..... –40°C to +125°C

CAUTION: Stresses above those listed in "Absolute Maximum Ratings" may cause permanent damage to the device. This is a stress only rating and operation of the device at these or any other conditions above those indicated in the operational sections of this specification is not implied.

Electro-Static Discharge Sensitivity



This integrated circuit can be damaged by ESD. It is recommended that all integrated circuits be handled with proper precautions. Failure to observe proper handling and installation procedures can cause damage. ESD damage can range from subtle performance degradation to complete device failure.

Pins Description

Pin	Symbol	Description
1	VDD	Power Supply.
2,3	GND	Ground.
4	OUT	Analog output signal.

Functional Block Diagram

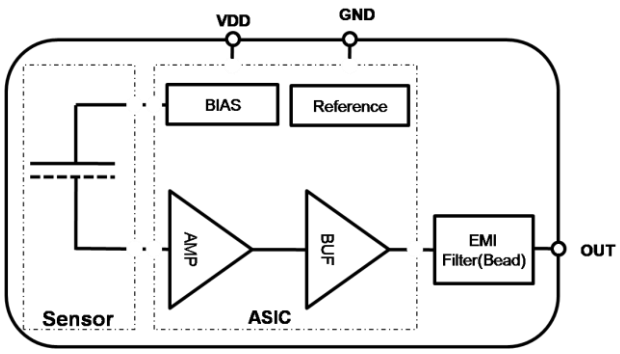

Specifications

(TA = +23°C, VDD = +1.8V, R.H. = 60%~70%, no load, VDD Decoupling cap=0.1uF unless otherwise noted.)

PARAMETER	Symbol	TEST CONDITIONS	MIN	TYP	MAX	UNIT
Directivity				Omni		
Supply Voltage	V_{DD}		1.5		3.6	V
Current Consumption	I_{DD}	VDD=1.8V		120	200	µA
	I_{DD}	VDD=3.3V		100	150	µA
Sensitivity (Note)		1kHz, 94dB SPL	−43	−42	−41	dBV
Signal-to-Noise-Ratio	SNR			59		dBA
Equivalent Input Noise	EIN			35		dBA SPL
Total Harmonic Distortion	THD	110dB SPL @ 1KHz			1	%
Acoustic Overload Point	AOP	10% THD @ 1KHz		128		dBSPL
Power Supply Rejection Ratio	PSRR	217Hz, 100mV Vp-p, sine wave on V_{DD}		65		dB
Output Impedance	Zout			200	350	Ω
Output DC Offset				0.70		V
Output Current Limit				90		µA
Polarity				Noninverting		

Note: Base on BK sound test system.

Copyright © Zilltek Technology Corp.
5F,No.6-1,Dusing Rd, Hsinchu Science Park,
Hsinchu City 30078,Taiwan.
Tel: (886) 3577 7509; Fax: (886) 3577 7390
Email: sales@zilltek.com

Typical Performance Characteristics

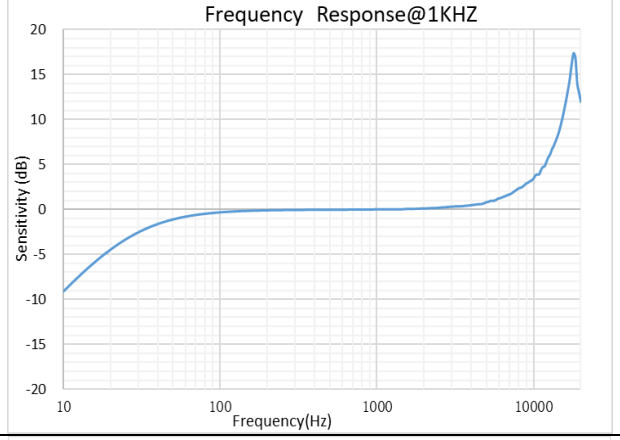

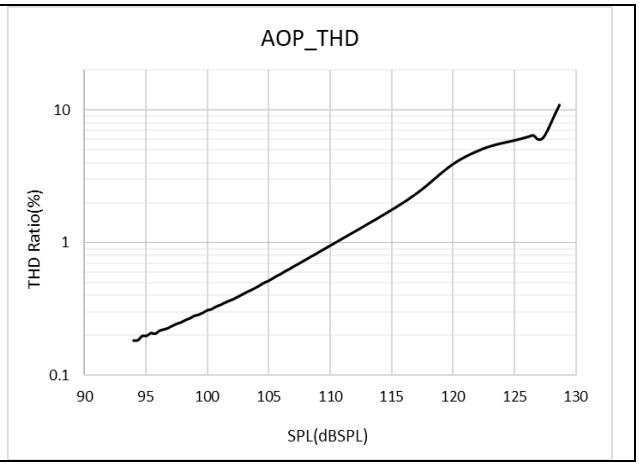

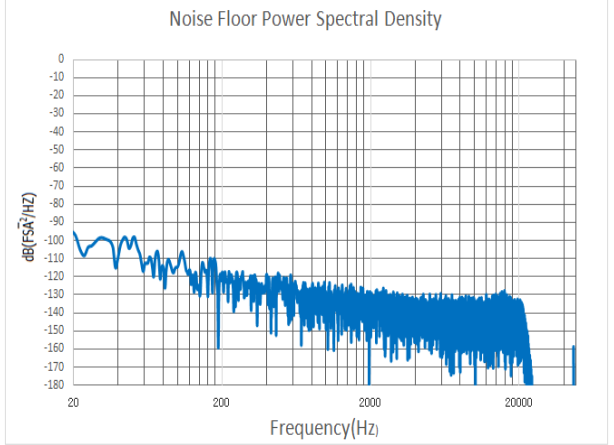

Copyright © Zilltek Technology Corp.
5F,No.6-1,Dusing Rd, Hsinchu Science Park,
Hsinchu City 30078,Taiwan.
Tel: (886) 3577 7509; Fax: (886) 3577 7390
Email: sales@zilltek.com

TDMA Disturbance Immunity

- 65 dB Max @500～2500MHz (Direct RF injection test according to set figure , this set figure is based on below block diagram.)

Instrument settings

Signal Generator

- modulation: 1 kHz, AM, depth 80%
- test frequency and amplitude from frequency/amplitude table

MHz	dBm	MHz	dBm	MHz	dBm	MHz	dBm	MHz	dBm
100	-4.08	600	-2.85	1100	-1.64	1600	-0.52	2100	0.05
200	-3.68	700	-2.61	1200	-1.33	1700	-0.29	2200	0.12
300	-3.31	800	-2.39	1300	-1.25	1800	-0.11	2300	0.27
400	-3.24	900	-2.11	1400	-1.08	1900	-0.04	2400	0.31
500	-3.09	1000	-1.84	1500	-0.86	2000	-0.01	2500	0.45

RF Immunity Measurement Diagram

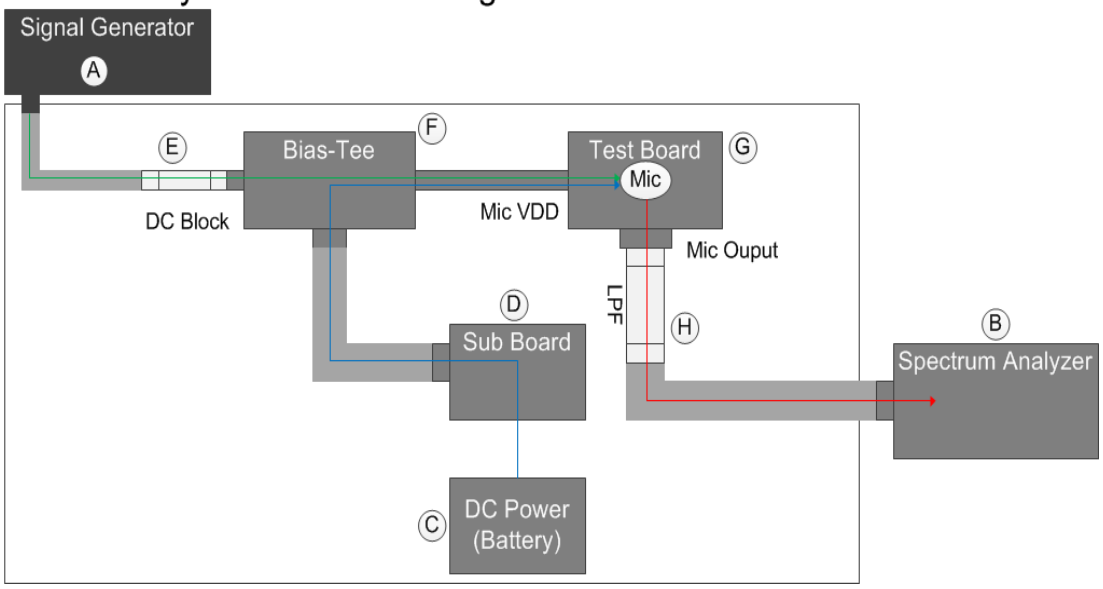

A	Signal Generator	Rode & Schwarz SMIQ 03B
B	Spectrum Analyzer	Audio Precision APx525
C	DC Power	Battery 3V
D	Sub Board with RL & Capacitor	C: 0.1uF
E	DC block	Agilent 11742A
F	Bias-Tee	Mini-Circuits ZFBT-6GW
G	Test Board	ZTS6011E EVB
H	Low pass filter (Pass band 5M~2.5GHz)	Mini-Circuits SLP-2.5, SLP-5, SLP-150, SLP-450, SLP-1200,SLP-1650

Copyright © Zilltek Technology Corp.
5F,No.6-1,Dusing Rd, Hsinchu Science Park,
Hsinchu City 30078,Taiwan.
Tel: (886) 3577 7509; Fax: (886) 3577 7390
Email: sales@zilltek.com

Production Test

Frequency Response

Frequency / Hz	Lower limit	Upper limit	Unit
20 … 100	-2	+2	
100 … 2000	-2	+2	
2000 …6000	-5	+5	

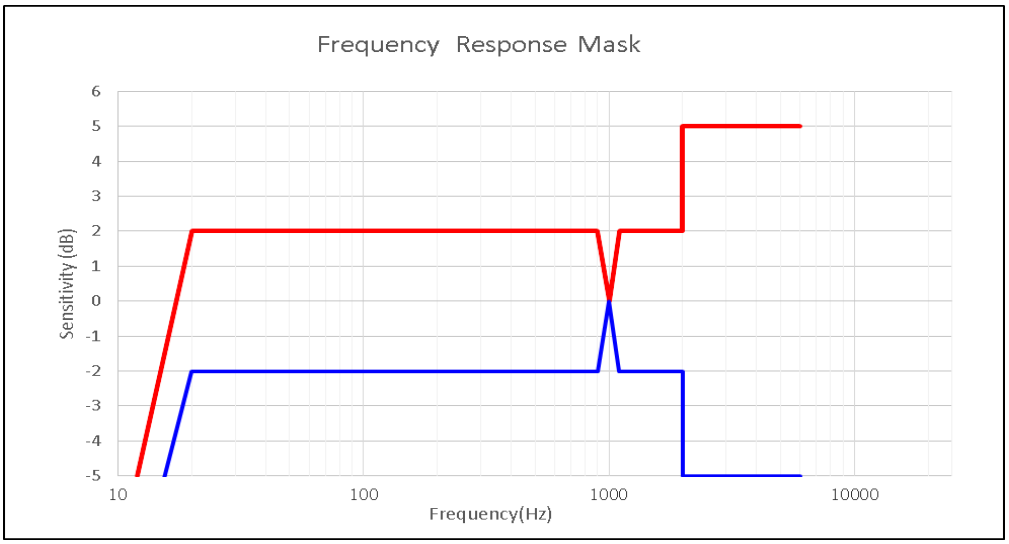

Figure 1: Frequency Response Mask

Distortion Test

Table 1.6: Distortion Requirements for the 120 dB Channel

	Requirement	Test Conditions	
		Acoustic signal	Position & Speaker
Distortion at 105 dB SPL	<3% THD+N	1 KHz sinusoidal. 105 dB SPL at test position.	Near Field Speaker
Distortion at 120 dB SPL	<10% THD+N	1 KHz sinusoidal. 120 dB SPL at test position.	Near Field Speaker

Noise Floor Test

Microphone should be measured in a silent anechoic chamber. Decimated idle channel noise output is analyzed with FFT, autocorrelation and sonogram. In addition to this, a very low frequency (~1 Hz) low-level sine signal is used to excitate the ADC input and an FFT spectrum of the audio band vs. sine level is plotted. The audio band has to be free from any idle tones and low-level noise-modulation. These can be tested, for example with power spectra and coherent spectra averaging, very low frequency excitation, auto correlation analysis

Copyright © Zilltek Technology Corp.
5F,No.6-1,Dusing Rd, Hsinchu Science Park,
Hsinchu City 30078,Taiwan.
Tel: (886) 3577 7509; Fax: (886) 3577 7390
Email: sales@zilltek.com

Reliability Tests

The microphone sensitivity after stress must deviate by no more than ±3dB from the initial value.

1. Heat Test, Operational	Temperature: 125±3 °C Duration: 1000 hours Voltage: Applied
2. Cold Test, Operational	Temperature: -40±3°C Duration: 1000 hours Voltage: Applied
3. Heat Test, Non-Operational	Temperature: 125±3°C Duration: 1000 hours Voltage: Not Applied
4. Cold Test, Non-Operational	Temperature: -40±3°C Duration:1000 hours Voltage: Not Applied
5. Thermal Shock Test, Non-Operational	Temperature: -40±3°C and 125±3°C Duration: 30 minutes each, during 5 minutes ramp, 256 cycles Voltage: Not applied
6. Temperature humidity storage	Temperature: 85±3°C Humidity: 85±3%RH Duration: 1000 hours
	Temperature: 65±3°C Humidity: 95±3%RH Duration: 168 hours
7. Free Fall Test 1.5m	Placed inside test fixture and dropped on concrete from height 1.5m. 4 times by each surface and corner
8. Vibration	4 cycles of 20 to 2000 Hz sinusoidal sweep with 20G peak acceleration lasting 12 minutes in X, Y, and Z directions
9. Mechanical Shock	5 pulses of 10000g in each of the ±X, ±Y, and ±Z directions
10. Electrostatic Discharge Test	Capacitance: 150pF Resistance: 330Ω Duration: 10 times Air Discharge: Level 4(+/-15kV) Direct contact discharge: Level 4 (+/-8kV)
11. Human Body Mode	±5000 Volt
12. Charged-Device Model	±500 Volt
13. Reflow	5 reflow cycles with peak temperature of 260°C
14. Solderability	245 ± 5 °C ,5sec, 95% Tin on pad surface
15. Tumble test	300 tumbles from a height of 1m onto a steel base.
16. HAST	Temperature: 130±3°C Humidity: 85±3%RH Duration: 96 hours Voltage: Applied
17. Air Blow	0.45MPa, distance 3cm, time 10s

Copyright © Zilltek Technology Corp.
5F,No.6-1,Dusing Rd, Hsinchu Science Park,
Hsinchu City 30078,Taiwan.
Tel: (886) 3577 7509; Fax: (886) 3577 7390
Email: sales@zilltek.com

MECHANICAL SPECIFICATIOPNS

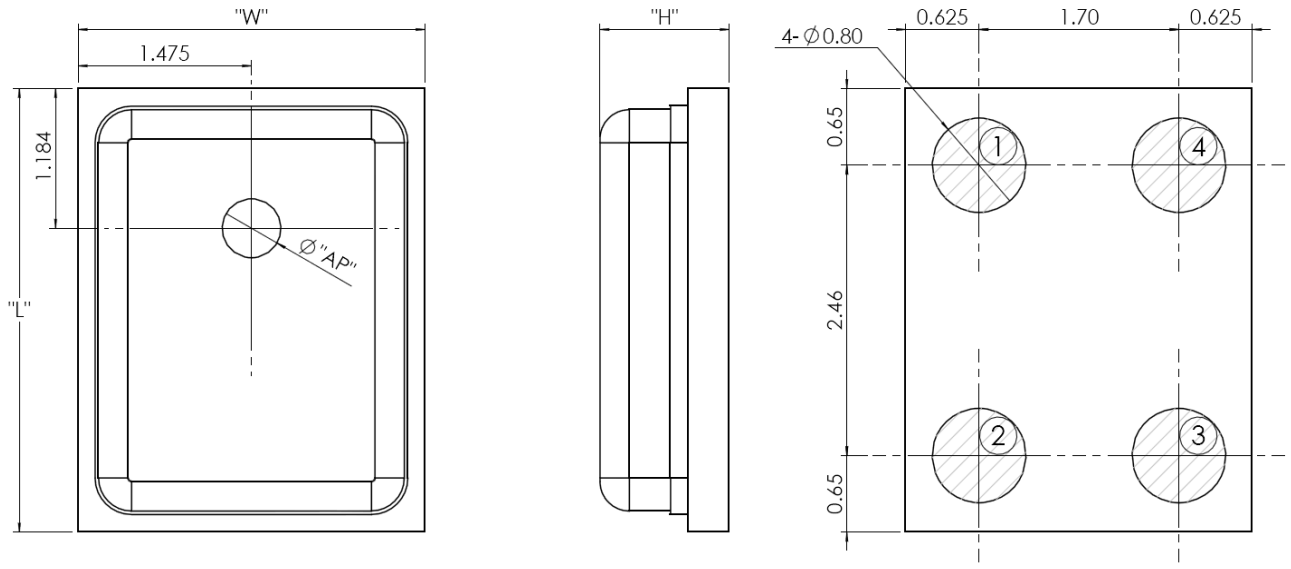

ITEM	DIMENSION	TOLERANCE	UNITS
Length (L)	3.760	±0.100	mm
Width (W)	2.950	±0.100	mm
Height (H)	1.100	±0.100	mm
Acoustic Port (AP)	Ø0.500	±0.050	mm

Pin	Symbol	Description
1	VDD	Power Supply.
2,3	GND	Ground.
4	OUT	Analog output signal.

設計驗證
工程課
2025 -01- 17
發行
鈺太科技開發股份有限公司

Copyright © Zilltek Technology Corp.
5F,No.6-1,Dusing Rd, Hsinchu Science Park,
Hsinchu City 30078,Taiwan.
Tel: (886) 3577 7509; Fax: (886) 3577 7390
Email: sales@zilltek.com

RECOMMENDED CUSTOMER LAND PATTERN

The recommended PCB land pattern for the ZTS6011E should have a 1:1 ratio to the solder pads on the microphone package. Care should be taken to avoid applying solder paste to the sound hole in PCB. The dimensions of suggested solder paste pattern refer to the land pattern **which should be shrunk by 0.025 per side**.

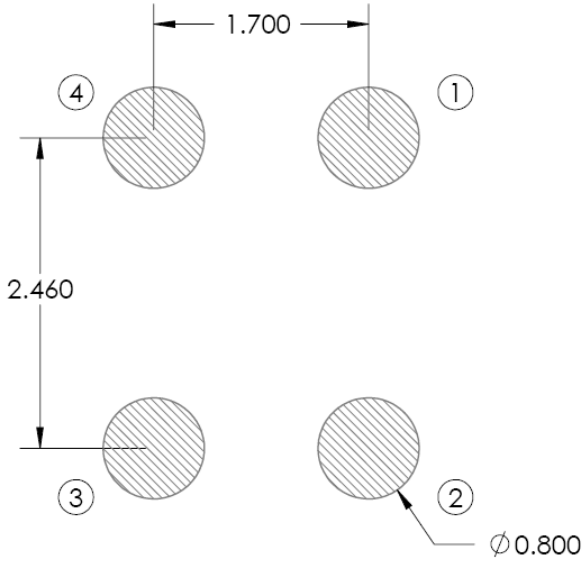

Copyright © Zilltek Technology Corp.
5F,No.6-1,Dusing Rd, Hsinchu Science Park,
Hsinchu City 30078,Taiwan.
Tel: (886) 3577 7509; Fax: (886) 3577 7390
Email: sales@zilltek.com

SOLDER FLOW PROFILE

The reflow profile specified in this section describes expected maximum heat exposure of components during the reflow process of NMP product PWBs. Temperature is measured on top of component. All components have to tolerate at least this profile five times (5x) without affecting electrical performance, mechanical performance or reliability.

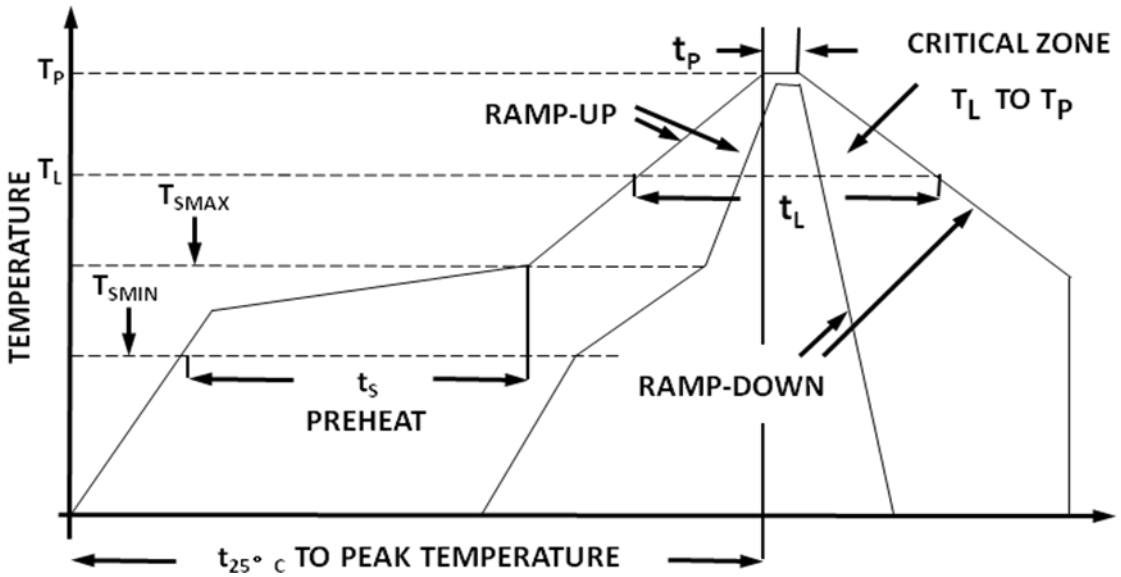

Pb-free reflow profile requirements for soldering heat resistance:

Parameter		Reference	Pb-Free
Average Ramp Rate		T_L to T_P	3°C/sec max
Preheat	Minimum Temperature	T_{SMIN}	150°C
	Maximum Temperature	T_{SMAX}	200°C
	Time	T_{SMIN} to T_{SMAX}	60sec to 180sec
Time Maintained Above	Temperature	T_L	217°C
	Time	t_L	60sec to 150sec
Peak Temperature		T_P	260°C
Time Within +5°C of Actual Peak Temperature		t_P	20 sec to 40 sec
Ramp-Down Rate		T_{peak}	6°C/sec max
Time +25°C (t_{25OC}) to Peak Temperature			8 min max

ADDIOTIONAL NOTES: MSL (moisture sensitivity level) Class 1.

Copyright © Zilltek Technology Corp.
5F,No.6-1,Dusing Rd, Hsinchu Science Park,
Hsinchu City 30078,Taiwan.
Tel: (886) 3577 7509; Fax: (886) 3577 7390
Email: sales@zilltek.com

ZTS6011E PACKAGING

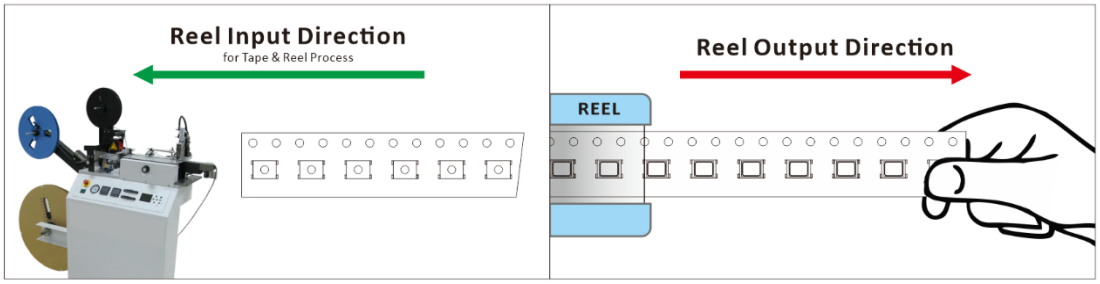

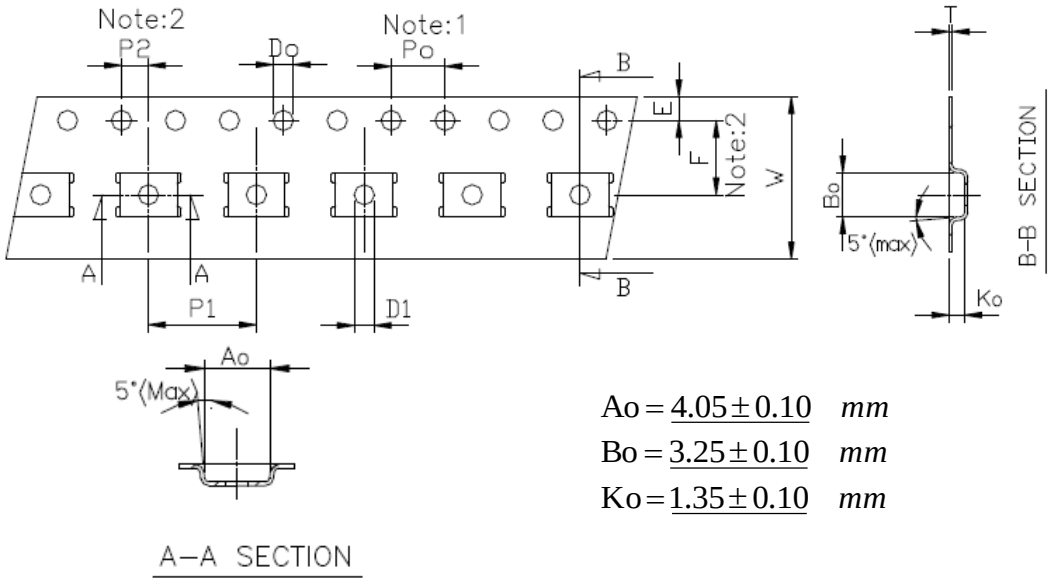

$$Ao = \underline{4.05 \pm 0.10} \quad mm$$
$$Bo = \underline{3.25 \pm 0.10} \quad mm$$
$$Ko = \underline{1.35 \pm 0.10} \quad mm$$

Unit：mm

Symbol	Spec.
K1	-
P_O	4.0 ± 0.10
P1	8.0 ± 0.10
P2	2.0 ± 0.05
D_O	1.55 ± 0.05
D1	1.50 (MIN)
E	1.75 ± 0.10
F	5.50 ± 0.05
$10P_O$	40.0 ± 0.10
W	12.0 ± 0.20
T	0.30 ± 0.05

Notice：

1．10 Sprocket hole pitch cumulative tolerance is ± 0.1mm.
2．Pocket position relative to sprocket hole measured as true position of pocket not pocket hole.
3．A_O & B_O measured on a place 0.3mm above the bottom of the pocket to top surface of the carrier.
4．K_O measured from a plane on the inside bottom of the pocket to the top surface of the carrier.
5．Carrier camber shall be not that 1mm per 100mm through a length of 250mm.

Copyright © Zilltek Technology Corp.
5F,No.6-1,Dusing Rd, Hsinchu Science Park,
Hsinchu City 30078,Taiwan.
Tel: (886) 3577 7509; Fax: (886) 3577 7390
Email: sales@zilltek.com

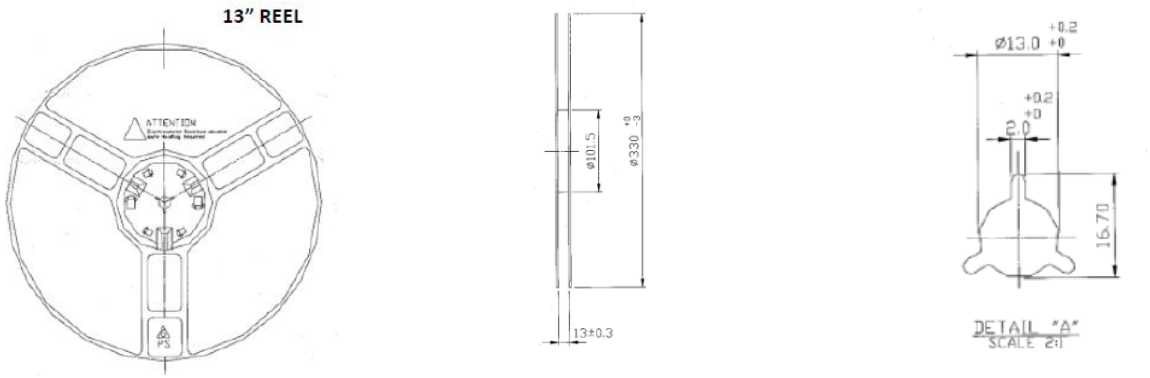

Part NO.	Reel Diameter	Quantity Per Reel	Quantity Per Inner Box	Quantity Per Outer Box
ZTS6011E	13"	5,200	5,200	46,800

Dimensions for Inner Box

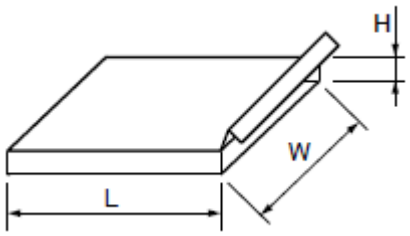

Unit：mm

L	W	H
335	339	45

Dimensions for Outer Box

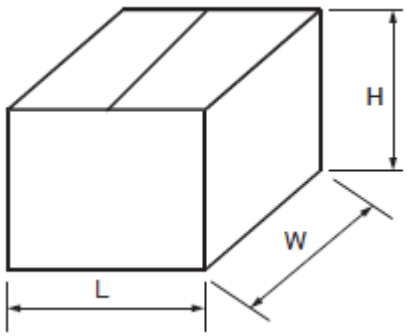

Unit：mm

L	W	H
445	360	372

Copyright © Zilltek Technology Corp.
5F,No.6-1,Dusing Rd, Hsinchu Science Park,
Hsinchu City 30078,Taiwan.
Tel: (886) 3577 7509; Fax: (886) 3577 7390
Email: sales@zilltek.com