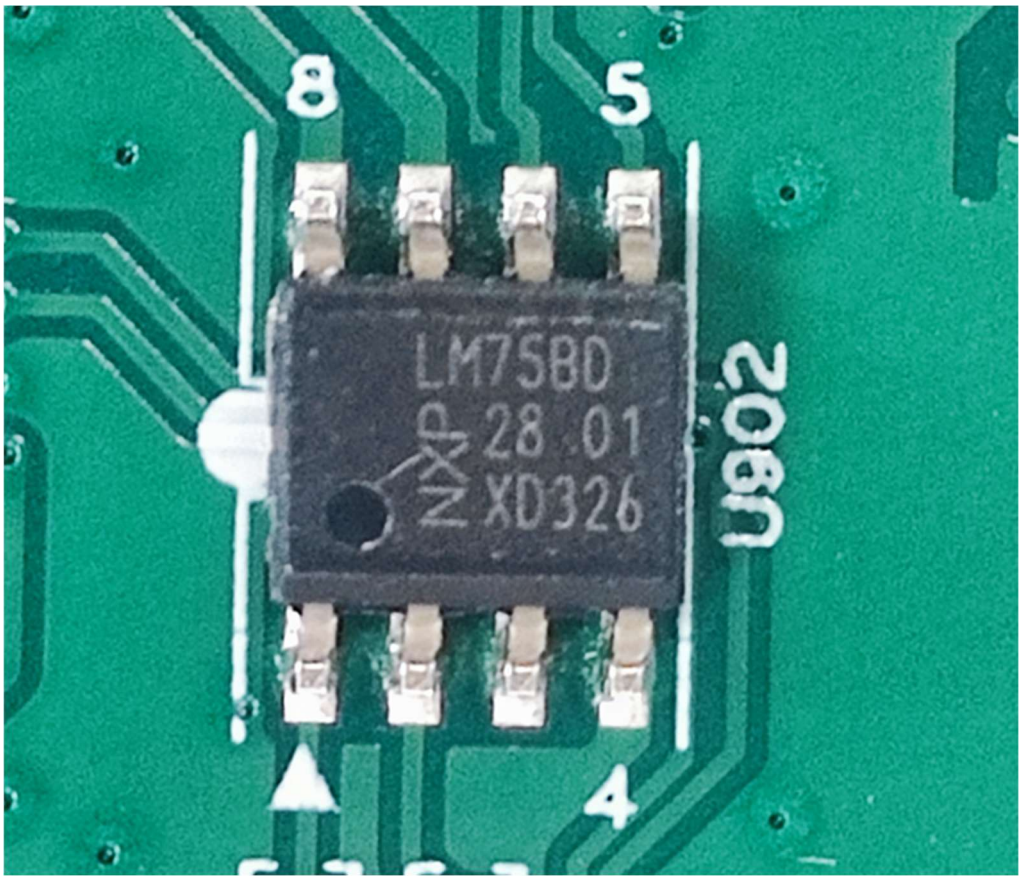

設計驗證
工程課
2025-01-14
發行

文曄科技
WT MICROELECTRONICS
新北市中和區中正路 738 號 14 樓
14F, No.738, Chung Cheng Road, Chung Ho District, New Taipei City 235, Taiwan
TEL:(02)8226-9088 FAX:(02)8226-9099

承　認　書
APPROVAL SHEET

□ 承認日期 APPROVED DATE	:	10-Dec-24
□ 客戶名稱 CUSTOMER	:	鈺緯科技開發股份有限公司 DIVA Laboratories. Ltd.
□ 品　　名 PART NAME	:	LM75BD,118 3ALM75B001Y (A0551)
□ 廠　　牌 BRAND	:	DIODES
□ 包　　裝 PACKAGE	:	SO8

設計驗證
工程課
2025-01-14
發行
鈺緯科技開發股份有限公司

LM75B

Digital temperature sensor and thermal watchdog

Rev. 6.1 — 6 February 2015 Product data sheet

1. General description

The LM75B is a temperature-to-digital converter using an on-chip band gap temperature sensor and Sigma-Delta A-to-D conversion technique with an overtemperature detection output. The LM75B contains a number of data registers: Configuration register (Conf) to store the device settings such as device operation mode, OS operation mode, OS polarity and OS fault queue as described in Section 7 “Functional description”; temperature register (Temp) to store the digital temp reading, and set-point registers (Tos and Thyst) to store programmable overtemperature shutdown and hysteresis limits, that can be communicated by a controller via the 2-wire serial I^2C-bus interface. The device also includes an open-drain output (OS) which becomes active when the temperature exceeds the programmed limits. There are three selectable logic address pins so that eight devices can be connected on the same bus without address conflict.

The LM75B can be configured for different operation conditions. It can be set in normal mode to periodically monitor the ambient temperature, or in shutdown mode to minimize power consumption. The OS output operates in either of two selectable modes: OS comparator mode or OS interrupt mode. Its active state can be selected as either HIGH or LOW. The fault queue that defines the number of consecutive faults in order to activate the OS output is programmable as well as the set-point limits.

The temperature register always stores an 11-bit two’s complement data giving a temperature resolution of 0.125 °C. This high temperature resolution is particularly useful in applications of measuring precisely the thermal drift or runaway. When the LM75B is accessed the conversion in process is not interrupted (that is, the I^2C-bus section is totally independent of the Sigma-Delta converter section) and accessing the LM75B continuously without waiting at least one conversion time between communications will not prevent the device from updating the Temp register with a new conversion result. The new conversion result will be available immediately after the Temp register is updated.

The LM75B powers up in the normal operation mode with the OS in comparator mode, temperature threshold of 80 °C and hysteresis of 75 °C, so that it can be used as a stand-alone thermostat with those pre-defined temperature set points.

2. Features and benefits

- Pin-for-pin replacement for industry standard LM75 and LM75A and offers improved temperature resolution of 0.125 °C and specification of a single part over power supply range from 2.8 V to 5.5 V
- I^2C-bus interface with up to 8 devices on the same bus
- Power supply range from 2.8 V to 5.5 V
- Temperatures range from −55 °C to +125 °C

- Frequency range 20 Hz to 400 kHz with bus fault time-out to prevent hanging up the bus
- 11-bit ADC that offers a temperature resolution of 0.125 °C
- Temperature accuracy of:
  - ±2 °C from −25 °C to +100 °C
  - ±3 °C from −55 °C to +125 °C
- Programmable temperature threshold and hysteresis set points
- Supply current of 1.0 μA in shutdown mode for power conservation
- Stand-alone operation as thermostat at power-up
- ESD protection exceeds 4500 V HBM per JESD22-A114 and 1000 V CDM per JESD22-C101
- Latch-up testing is done to JEDEC Standard JESD78 which exceeds 100 mA
- Small 8-pin package types: SO8, TSSOP8, 3 mm × 2 mm XSON8U, and 2 mm × 3 mm HWSON8

3. Applications

- System thermal management
- Personal computers
- Electronics equipment
- Industrial controllers

All information provided in this document is subject to legal disclaimers.

© NXP B.V. 2015. All rights reserved.

4. Ordering information

Table 1. Ordering information

Type number	Topside mark	Package		
		Name	Description	Version
LM75BD	LM75BD	SO8	plastic small outline package; 8 leads; body width 3.9 mm	SOT96-1
LM75BDP	LM75B	TSSOP8	plastic thin shrink small outline package; 8 leads; body width 3 mm	SOT505-1
LM75BGD[1]	75B	XSON8U	plastic extremely thin small outline package; no leads; 8 terminals; UTLP based; body 3 × 2 × 0.5 mm	SOT996-2
LM75BTP	M75	HWSON8	plastic thermal enhanced very very thin small outline package; no leads; 8 terminals, 2 × 3 × 0.8 mm	SOT1069-2

[1] LM75BGD cannot be production cold temperature tested because of manufacturing process constraints. Although no LM75BGD complaints have been noted, NXP recommends consideration/use of the LM75BTP instead of the LM75BGD in operating environments of less than 0 °C.

4.1 Ordering options

Table 2. Ordering options

Type number	Orderable part number	Package	Packing method	Minimum order quantity	Temperature
LM75BD	LM75BD,112	SO8	Standard marking * IC's tube - DSC bulk pack	2000	T_{amb} = –55 °C to +125 °C
	LM75BD,118	SO8	Reel 13" Q1/T1 *Standard mark SMD	2500	T_{amb} = –55 °C to +125 °C
LM75BDP	LM75BDP,118	TSSOP8	Reel 13" Q1/T1 *Standard mark SMD	2500	T_{amb} = –55 °C to +125 °C
LM75BGD	LM75BGD,125	XSON8U	Reel 7" Q3/T4 *Standard mark	3000	T_{amb} = –55 °C to +125 °C
LM75BTP	LM75BTP,147	HWSON8	Reel 7" Q2/T3 *Standard mark	4000	T_{amb} = –55 °C to +125 °C

All information provided in this document is subject to legal disclaimers.

© NXP B.V. 2015. All rights reserved.

5. Block diagram

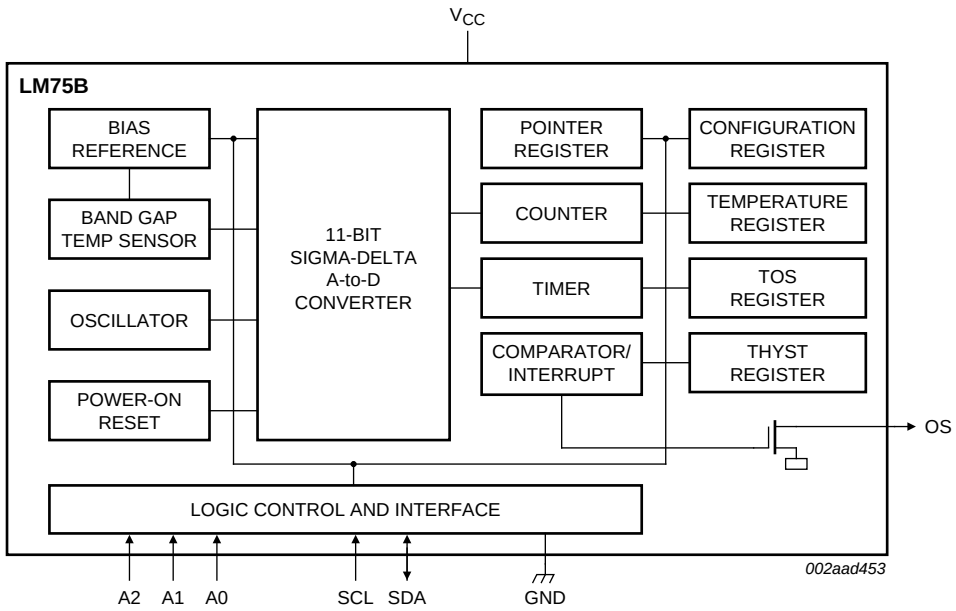

Fig 1. Block diagram of LM75B

6. Pinning information

6.1 Pinning

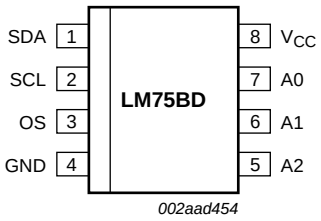

Fig 2. Pin configuration for SO8

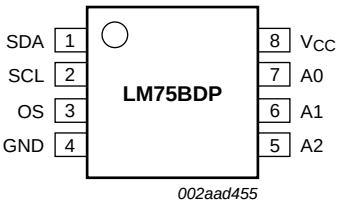

Fig 3. Pin configuration for TSSOP8

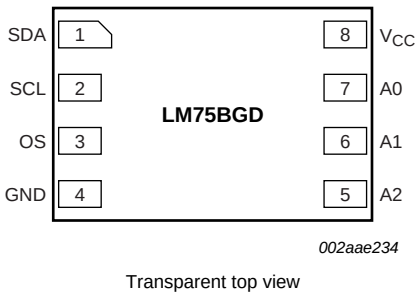

Fig 4. Pin configuration for XSON8U

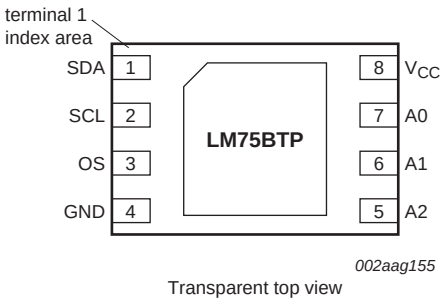

Fig 5. Pin configuration for HWSON8

All information provided in this document is subject to legal disclaimers.

© NXP B.V. 2015. All rights reserved.

6.2 Pin description

Table 3. Pin description

Symbol	Pin	Description
SDA	1	Digital I/O. I^2C-bus serial bidirectional data line; open-drain.
SCL	2	Digital input. I^2C-bus serial clock input.
OS	3	Overtemperature Shutdown output; open-drain.
GND	4	Ground. To be connected to the system ground.
A2	5	Digital input. User-defined address bit 2.
A1	6	Digital input. User-defined address bit 1.
A0	7	Digital input. User-defined address bit 0.
V_{CC}	8	Power supply.

7. Functional description

7.1 General operation

The LM75B uses the on-chip band gap sensor to measure the device temperature with the resolution of 0.125 °C and stores the 11-bit two's complement digital data, resulted from 11-bit A-to-D conversion, into the device Temp register. This Temp register can be read at any time by a controller on the I^2C-bus. Reading temperature data does not affect the conversion in progress during the read operation.

The device can be set to operate in either mode: normal or shutdown. In normal operation mode, the temp-to-digital conversion is executed every 100 ms and the Temp register is updated at the end of each conversion. During each 'conversion period' (T_{conv}) of about 100 ms the device takes only about 10 ms, called 'temperature conversion time' ($t_{conv(T)}$), to complete a temperature-to-data conversion and then becomes idle for the time remaining in the period. This feature is implemented to significantly reduce the device power dissipation. In shutdown mode, the device becomes idle, data conversion is disabled and the Temp register holds the latest result; however, the device I^2C-bus interface is still active and register write/read operation can be performed. The device operation mode is controllable by programming bit B0 of the configuration register. The temperature conversion is initiated when the device is powered-up or put back into normal mode from shutdown.

In addition, at the end of each conversion in normal mode, the temperature data (or Temp) in the Temp register is automatically compared with the overtemperature shutdown threshold data (or $T_{th(ots)}$) stored in the Tos register, and the hysteresis data (or T_{hys}) stored in the Thyst register, in order to set the state of the device OS output accordingly. The device Tos and Thyst registers are write/read capable, and both operate with 9-bit two's complement digital data. To match with this 9-bit operation, the Temp register uses only the 9 MSB bits of its 11-bit data for the comparison.

The way that the OS output responds to the comparison operation depends upon the OS operation mode selected by configuration bit B1, and the user-defined fault queue defined by configuration bits B3 and B4.

All information provided in this document is subject to legal disclaimers.

© NXP B.V. 2015. All rights reserved.

In OS comparator mode, the OS output behaves like a thermostat. It becomes active when the Temp exceeds the $T_{th(ots)}$, and is reset when the Temp drops below the T_{hys}. Reading the device registers or putting the device into shutdown does not change the state of the OS output. The OS output in this case can be used to control cooling fans or thermal switches.

In OS interrupt mode, the OS output is used for thermal interruption. When the device is powered-up, the OS output is first activated only when the Temp exceeds the $T_{th(ots)}$; then it remains active indefinitely until being reset by a read of any register. Once the OS output has been activated by crossing $T_{th(ots)}$ and then reset, it can be activated again only when the Temp drops below the T_{hys}; then again, it remains active indefinitely until being reset by a read of any register. The OS interrupt operation would be continued in this sequence: $T_{th(ots)}$ trip, Reset, T_{hys} trip, Reset, $T_{th(ots)}$ trip, Reset, T_{hys} trip, Reset, etc. Putting the device into the shutdown mode by setting the bit 0 of the configuration register also resets the OS output.

In both cases, comparator mode and interrupt mode, the OS output is activated only if a number of consecutive faults, defined by the device fault queue, has been met. The fault queue is programmable and stored in the two bits, B3 and B4, of the Configuration register. Also, the OS output active state is selectable as HIGH or LOW by setting accordingly the configuration register bit B2.

At power-up, the device is put into normal operation mode, the $T_{th(ots)}$ is set to 80 °C, the T_{hys} is set to 75 °C, the OS active state is selected LOW and the fault queue is equal to 1. The temp reading data is not available until the first conversion is completed in about 100 ms.

The OS response to the temperature is illustrated in Figure 6.

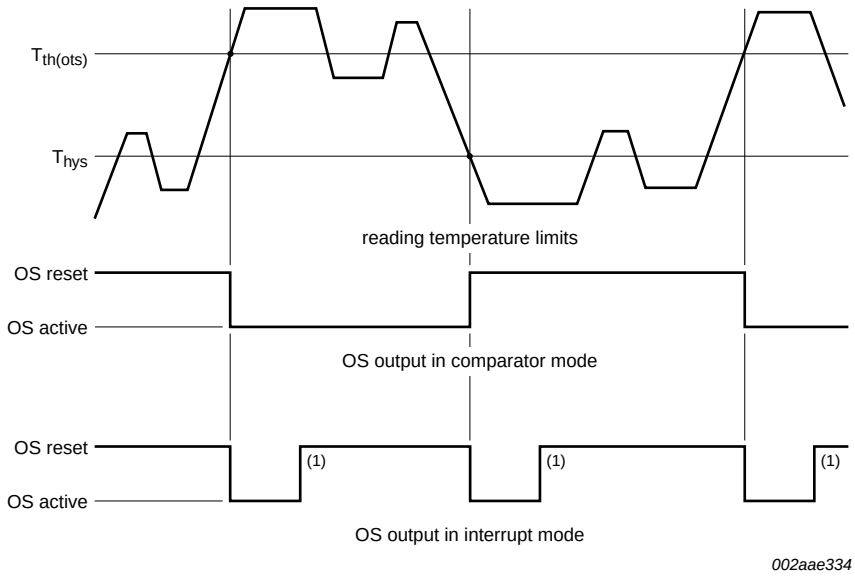

(1) OS is reset by either reading register or putting the device in shutdown mode. It is assumed that the fault queue is met at each $T_{th(ots)}$ and T_{hys} crossing point.

Fig 6. OS response to temperature

All information provided in this document is subject to legal disclaimers.

© NXP B.V. 2015. All rights reserved.

7.2 I²C-bus serial interface

The LM75B can be connected to a compatible 2-wire serial interface I²C-bus as a slave device under the control of a controller or master device, using two device terminals, SCL and SDA. The controller must provide the SCL clock signal and write/read data to/from the device through the SDA terminal. Notice that if the I²C-bus common pull-up resistors have not been installed as required for I²C-bus, then an external pull-up resistor, about 10 kΩ, is needed for each of these two terminals. The bus communication protocols are described in Section 7.10.

7.2.1 Bus fault time-out

If the SDA line is held LOW for longer than t_{to} (75 ms minimum / 13.3 Hz; guaranteed at 50 ms minimum / 20 Hz), the LM75B will reset to the idle state (SDA released) and wait for a new START condition. This ensures that the LM75B will never hang up the bus should there be conflict in the transmission sequence.

7.3 Slave address

The LM75B slave address on the I²C-bus is partially defined by the logic applied to the device address pins A2, A1 and A0. Each of them is typically connected either to GND for logic 0, or to V_{CC} for logic 1. These pins represent the three LSB bits of the device 7-bit address. The other four MSB bits of the address data are preset to '1001' by hard wiring inside the LM75B. Table 4 shows the device's complete address and indicates that up to 8 devices can be connected to the same bus without address conflict. Because the input pins, SCL, SDA and A2 to A0, are not internally biased, it is important that they should not be left floating in any application.

Table 4. Address table

1 = HIGH; 0 = LOW.

MSB						LSB
1	0	0	1	A2	A1	A0

7.4 Register list

The LM75B contains four data registers beside the pointer register as listed in Table 5. The pointer value, read/write capability and default content at power-up of the registers are also shown in Table 5.

Table 5. Register table

Register name	Pointer value	R/W	POR state	Description
Conf	01h	R/W	00h	Configuration register: contains a single 8-bit data byte; to set the device operating condition; default = 0.
Temp	00h	read only	n/a	Temperature register: contains two 8-bit data bytes; to store the measured Temp data.
Tos	03h	R/W	5000h	Overtemperature shutdown threshold register: contains two 8-bit data bytes; to store the overtemperature shutdown $T_{th(ots)}$ limit; default = 80 °C.
Thyst	02h	R/W	4B00h	Hysteresis register: contains two 8-bit data bytes; to store the hysteresis T_{hys} limit; default = 75 °C.

All information provided in this document is subject to legal disclaimers.

© NXP B.V. 2015. All rights reserved.

7.4.1 Pointer register

The Pointer register contains an 8-bit data byte, of which the two LSB bits represent the pointer value of the other four registers, and the other 6 MSB bits are equal to 0, as shown in Table 6 and Table 7. The Pointer register is not accessible to the user, but is used to select the data register for write/read operation by including the pointer data byte in the bus command.

Table 6. Pointer register

B7	B6	B5	B4	B3	B2	B[1:0]
0	0	0	0	0	0	pointer value

Table 7. Pointer value

B1	B0	Selected register
0	0	Temperature register (Temp)
0	1	Configuration register (Conf)
1	0	Hysteresis register (Thyst)
1	1	Overtemperature shutdown register (Tos)

Because the Pointer value is latched into the Pointer register when the bus command (which includes the pointer byte) is executed, a read from the LM75B may or may not include the pointer byte in the statement. To read again a register that has been recently read and the pointer has been preset, the pointer byte does not have to be included. To read a register that is different from the one that has been recently read, the pointer byte must be included. However, a write to the LM75B must always include the pointer byte in the statement. The bus communication protocols are described in Section 7.10.

At power-up, the Pointer value is equal to 00 and the Temp register is selected; users can then read the Temp data without specifying the pointer byte. However, the first temperature reading will be incorrect and must be ignored. Subsequent reads of the temperature register will be correct.

7.4.2 Configuration register

The Configuration register (Conf) is a write/read register and contains an 8-bit non-complement data byte that is used to configure the device for different operation conditions. Table 8 shows the bit assignments of this register.

Table 8. Conf register

*Legend: * = default value.*

Bit	Symbol	Access	Value	Description
B[7:5]	reserved	R/W	000*	reserved for manufacturer's use; should be kept as zeroes for normal operation
B[4:3]	OS_F_QUE[1:0]	R/W		OS fault queue programming
			00*	queue value = 1
			01	queue value = 2
			10	queue value = 4
			11	queue value = 6

All information provided in this document is subject to legal disclaimers.

© NXP B.V. 2015. All rights reserved.

Table 8. Conf register *...continued*

*Legend: * = default value.*

Bit	Symbol	Access	Value	Description
B2	OS_POL	R/W		OS polarity selection
			0*	OS active LOW
			1	OS active HIGH
B1	OS_COMP_INT	R/W		OS operation mode selection
			0*	OS comparator
			1	OS interrupt
B0	SHUTDOWN	R/W		device operation mode selection
			0*	normal
			1	shutdown

7.4.3 Temperature register

The Temperature register (Temp) holds the digital result of temperature measurement or monitor at the end of each analog-to-digital conversion. This register is read-only and contains two 8-bit data bytes consisting of one Most Significant Byte (MSByte) and one Least Significant Byte (LSByte). However, only 11 bits of those two bytes are used to store the Temp data in two's complement format with the resolution of 0.125 °C. Table 9 shows the bit arrangement of the Temp data in the data bytes.

Table 9. Temp register

MSByte								LSByte							
7	6	5	4	3	2	1	0	7	6	5	4	3	2	1	0
D10	D9	D8	D7	D6	D5	D4	D3	D2	D1	D0	X	X	X	X	X

When reading register Temp, all 16 bits of the two data bytes (MSByte and LSByte) are provided to the bus and must be all collected by the controller to complete the bus operation. However, only the 11 most significant bits should be used, and the 5 least significant bits of the LSByte are zero and should be ignored. One of the ways to calculate the Temp value in °C from the 11-bit Temp data is:

1. If the Temp data MSByte bit D10 = 0, then the temperature is positive and Temp value (°C) = +(Temp data) × 0.125 °C.
2. If the Temp data MSByte bit D10 = 1, then the temperature is negative and Temp value (°C) = −(two's complement of Temp data) × 0.125 °C.

Examples of the Temp data and value are shown in Table 10.

Table 10. Temp register value

11-bit binary (two's complement)	Hexadecimal value	Decimal value	Value
011 1111 1000	3F8	1016	+127.000 °C
011 1111 0111	3F7	1015	+126.875 °C
011 1111 0001	3F1	1009	+126.125 °C
011 1110 1000	3E8	1000	+125.000 °C
000 1100 1000	0C8	200	+25.000 °C
000 0000 0001	001	1	+0.125 °C

All information provided in this document is subject to legal disclaimers.

© NXP B.V. 2015. All rights reserved.

Table 10. Temp register value *…continued*

11-bit binary (two's complement)	Hexadecimal value	Decimal value	Value
000 0000 0000	000	0	0.000 °C
111 1111 1111	7FF	–1	–0.125 °C
111 0011 1000	738	–200	–25.000 °C
110 0100 1001	649	–439	–54.875 °C
110 0100 1000	648	–440	–55.000 °C

For 9-bit Temp data application in replacing the industry standard LM75, just use only 9 MSB bits of the two bytes and disregard 7 LSB of the LSByte. The 9-bit Temp data with 0.5 °C resolution of the LM75B is defined exactly in the same way as for the standard LM75 and it is here similar to the Tos and Thyst registers.

The only MSByte of the temperature can also be read with the use of a one-byte reading command. Then the temperature resolution will be 1.00 °C instead.

7.4.4 Overtemperature shutdown threshold (Tos) and hysteresis (Thyst) registers

These two registers, are write/read registers, and also called set-point registers. They are used to store the user-defined temperature limits, called overtemperature shutdown threshold ($T_{th(ots)}$) and hysteresis temperature (T_{hys}), for the device watchdog operation. At the end of each conversion the Temp data will be compared with the data stored in these two registers in order to set the state of the device OS output; see Section 7.1.

Each of the set-point registers contains two 8-bit data bytes consisting of one MSByte and one LSByte the same as register Temp. However, only 9 bits of the two bytes are used to store the set-point data in two's complement format with the resolution of 0.5 °C. Table 11 and Table 12 show the bit arrangement of the Tos data and Thyst data in the data bytes.

Notice that because only 9-bit data are used in the set-point registers, the device uses only the 9 MSB of the Temp data for data comparison.

Table 11. Tos register

MSByte								LSByte							
7	6	5	4	3	2	1	0	7	6	5	4	3	2	1	0
D8	D7	D6	D5	D4	D3	D2	D1	D0	X	X	X	X	X	X	X

Table 12. Thyst register

MSByte								LSByte							
7	6	5	4	3	2	1	0	7	6	5	4	3	2	1	0
D8	D7	D6	D5	D4	D3	D2	D1	D0	X	X	X	X	X	X	X

When a set-point register is read, all 16 bits are provided to the bus and must be collected by the controller to complete the bus operation. However, only the 9 most significant bits should be used and the 7 LSB of the LSByte are equal to zero and should be ignored.

Table 13 shows examples of the limit data and value.

All information provided in this document is subject to legal disclaimers.

© NXP B.V. 2015. All rights reserved.

Table 13. Tos and Thyst limit data and value

11-bit binary (two's complement)	Hexadecimal value	Decimal value	Value
0 1111 1010	0FA	250	+125.0 °C
0 0011 0010	032	50	+25.0 °C
0 0000 0001	001	1	+0.5 °C
0 0000 0000	000	0	0.0 °C
1 1111 1111	1FF	−1	−0.5 °C
1 1100 1110	1CE	−50	−25.0 °C
1 1001 0010	192	−110	−55.0 °C

7.5 OS output and polarity

The OS output is an open-drain output and its state represents results of the device watchdog operation as described in Section 7.1. In order to observe this output state, an external pull-up resistor is needed. The resistor should be as large as possible, up to 200 kΩ, to minimize the Temp reading error due to internal heating by the high OS sinking current.

The OS output active state can be selected as HIGH or LOW by programming bit B2 (OS_POL) of register Conf: setting bit OS_POL to logic 1 selects OS active HIGH and setting bit B2 to logic 0 sets OS active LOW. At power-up, bit OS_POL is equal to logic 0 and the OS active state is LOW.

7.6 OS comparator and interrupt modes

As described in Section 7.1, the device OS output responds to the result of the comparison between register Temp data and the programmed limits, in registers Tos and Thyst, in different ways depending on the selected OS mode: OS comparator or OS interrupt. The OS mode is selected by programming bit B1 (OS_COMP_INT) of register Conf: setting bit OS_COMP_INT to logic 1 selects the OS interrupt mode, and setting to logic 0 selects the OS comparator mode. At power-up, bit OS_COMP_INT is equal to logic 0 and the OS comparator is selected.

The main difference between the two modes is that in OS comparator mode, the OS output becomes active when Temp has exceeded $T_{th(ots)}$ and reset when Temp has dropped below T_{hys}, reading a register or putting the device into shutdown mode does not change the state of the OS output; while in OS interrupt mode, once it has been activated either by exceeding $T_{th(ots)}$ or dropping below T_{hys}, the OS output will remain active indefinitely until reading a register, then the OS output is reset.

Temperature limits $T_{th(ots)}$ and T_{hys} must be selected so that $T_{th(ots)} > T_{hys}$. Otherwise, the OS output state will be undefined.

All information provided in this document is subject to legal disclaimers.

© NXP B.V. 2015. All rights reserved.

7.7 OS fault queue

Fault queue is defined as the number of faults that must occur consecutively to activate the OS output. It is provided to avoid false tripping due to noise. Because faults are determined at the end of data conversions, fault queue is also defined as the number of consecutive conversions returning a temperature trip. The value of fault queue is selectable by programming the two bits B4 and B3 (OS_F_QUE[1:0]) in register Conf. Notice that the programmed data and the fault queue value are not the same. Table 14 shows the one-to-one relationship between them. At power-up, fault queue data = 0 and fault queue value = 1.

Table 14. Fault queue table

Fault queue data		Fault queue value
OS_F_QUE[1]	**OS_F_QUE[0]**	**Decimal**
0	0	1
0	1	2
1	0	4
1	1	6

7.8 Shutdown mode

The device operation mode is selected by programming bit B0 (SHUTDOWN) of register Conf. Setting bit SHUTDOWN to logic 1 will put the device into shutdown mode. Resetting bit SHUTDOWN to logic 0 will return the device to normal mode.

In shutdown mode, the device draws a small current of approximately 1.0 μA and the power dissipation is minimized; the temperature conversion stops, but the I^2C-bus interface remains active and register write/read operation can be performed. When the shutdown is set, the OS output will be unchanged in comparator mode and reset in interrupt mode.

7.9 Power-up default and power-on reset

The LM75B always powers-up in its default state with:

- Normal operation mode
- OS comparator mode
- $T_{th(ots)}$ = 80 °C
- T_{hys} = 75 °C
- OS output active state is LOW
- Pointer value is logic 00 (Temp)

When the power supply voltage is dropped below the device power-on reset level of approximately 1.0 V (POR) for over 2 μs and then rises up again, the device will be reset to its default condition as listed above.

All information provided in this document is subject to legal disclaimers.

© NXP B.V. 2015. All rights reserved.

7.10 Protocols for writing and reading the registers

The communication between the host and the LM75B must strictly follow the rules as defined by the I^2C-bus management. The protocols for LM75B register read/write operations are illustrated in Figure 7 to Figure 12 together with the following definitions:

1. Before a communication, the I^2C-bus must be free or not busy. It means that the SCL and SDA lines must both be released by all devices on the bus, and they become HIGH by the bus pull-up resistors.
2. The host must provide SCL clock pulses necessary for the communication. Data is transferred in a sequence of 9 SCL clock pulses for every 8-bit data byte followed by 1-bit status of the acknowledgement.
3. During data transfer, except the START and STOP signals, the SDA signal must be stable while the SCL signal is HIGH. It means that the SDA signal can be changed only during the LOW duration of the SCL line.
4. S: START signal, initiated by the host to start a communication, the SDA goes from HIGH to LOW while the SCL is HIGH.
5. RS: RE-START signal, same as the START signal, to start a read command that follows a write command.
6. P: STOP signal, generated by the host to stop a communication, the SDA goes from LOW to HIGH while the SCL is HIGH. The bus becomes free thereafter.
7. W: write bit, when the write/read bit = LOW in a write command.
8. R: read bit, when the write/read bit = HIGH in a read command.
9. A: device acknowledge bit, returned by the LM75B. It is LOW if the device works properly and HIGH if not. The host must release the SDA line during this period in order to give the device the control on the SDA line.
10. A': master acknowledge bit, not returned by the device, but set by the master or host in reading 2-byte data. During this clock period, the host must set the SDA line to LOW in order to notify the device that the first byte has been read for the device to provide the second byte onto the bus.
11. NA: Not Acknowledge bit. During this clock period, both the device and host release the SDA line at the end of a data transfer, the host is then enabled to generate the STOP signal.
12. In a write protocol, data is sent from the host to the device and the host controls the SDA line, except during the clock period when the device sends the device acknowledgement signal to the bus.
13. In a read protocol, data is sent to the bus by the device and the host must release the SDA line during the time that the device is providing data onto the bus and controlling the SDA line, except during the clock period when the master sends the master acknowledgement signal to the bus.

All information provided in this document is subject to legal disclaimers.

© NXP B.V. 2015. All rights reserved.

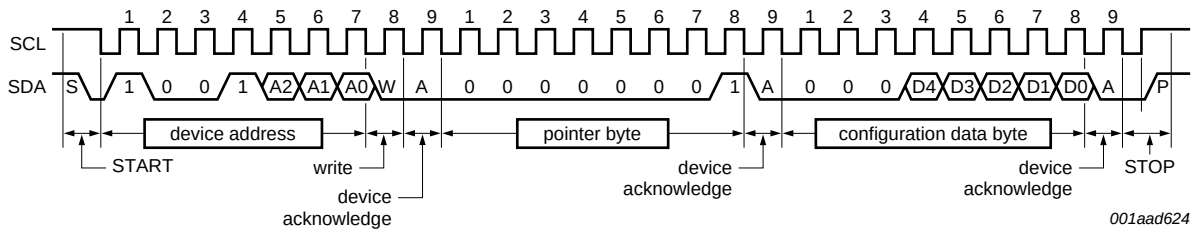

Fig 7. Write configuration register (1-byte data)

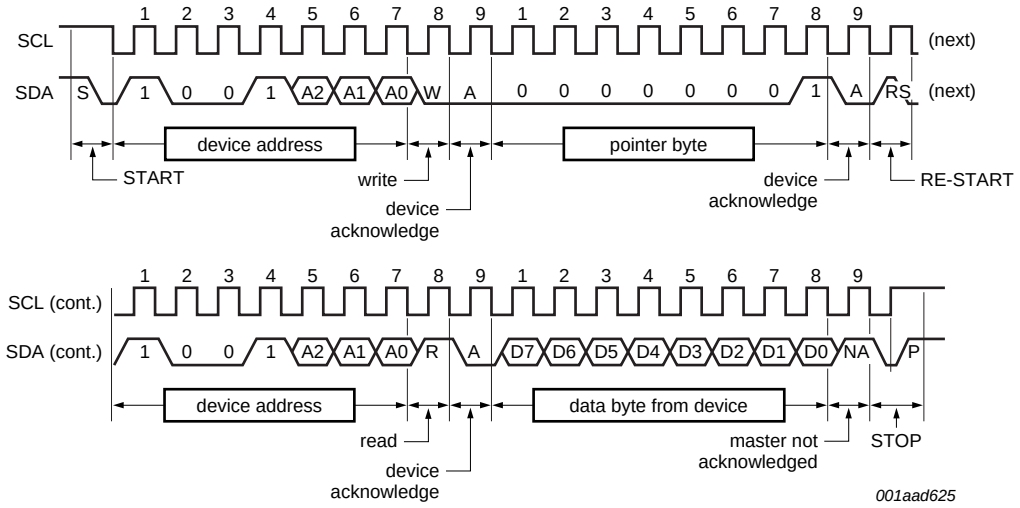

Fig 8. Read configuration register including pointer byte (1-byte data)

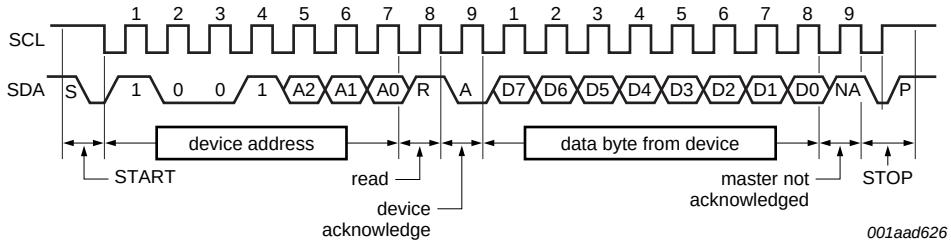

Fig 9. Read configuration or temp register with preset pointer (1-byte data)

All information provided in this document is subject to legal disclaimers.

© NXP B.V. 2015. All rights reserved.

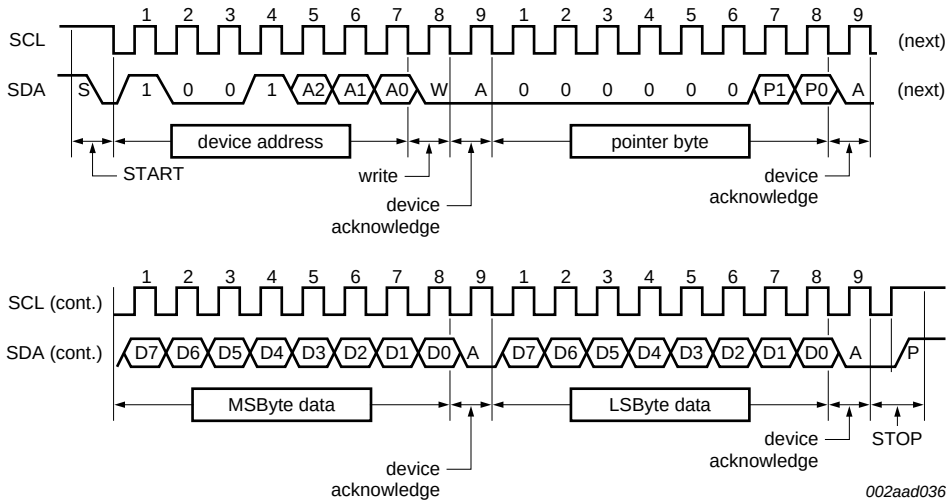

Fig 10. Write Tos or Thyst register (2-byte data)

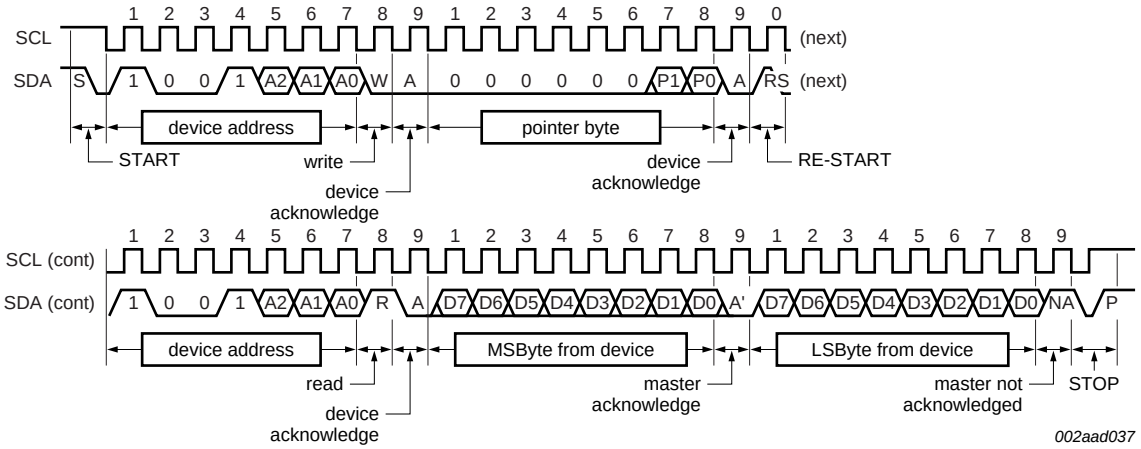

Fig 11. Read Temp, Tos or Thyst register including pointer byte (2-byte data)

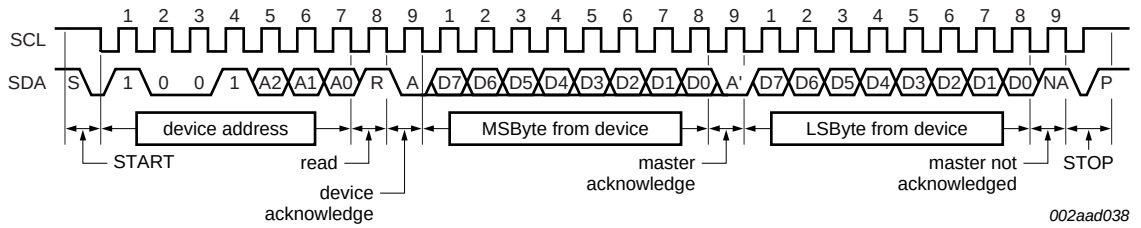

Fig 12. Read Temp, Tos or Thyst register with preset pointer (2-byte data)

All information provided in this document is subject to legal disclaimers.

© NXP B.V. 2015. All rights reserved.

8. Application design-in information

8.1 Typical application

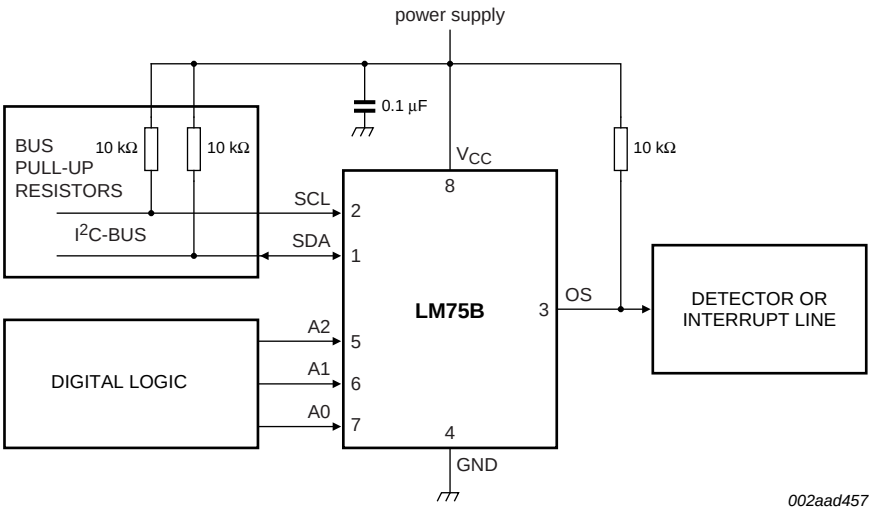

Fig 13. Typical application

8.2 LM75A and LM75B comparison

Table 15. LM75A and LM75B comparison

Description	LM75A	LM75B
availability of the XSON8U (3 mm × 2 mm) package type	no	yes
OS output auto-reset when SHUTDOWN bit is set in interrupt mode[1]	no	yes
support single-byte reading of the Temp registers without bus lockup[2]	no	yes
bus fault time-out (75 ms, 200 ms)[3]	no	yes
minimum data hold time ($t_{HD;DAT}$)[4]	10 ns	0 ns
ratio of conversion time / conversion period (typical)[5]	100 ms / 100 ms	10 ms / 100 ms
supply current in shutdown mode (typical value)	3.5 µA	0.2 µA
HBM ESD protection level (minimum)	>2000 V	>4500 V
MM ESD protection level (minimum)	>200 V	>450 V
CDM ESD protection level (minimum)	>1000 V	>2000 V

[1] This option is updated to be compatible with the competitive parts. When the OS output has been activated in the interrupt mode due to a temp limit violation, if the Configuration Shutdown bit B0 is set (to the LM75A), then the OS output activated status remains unchanged, while (to the LM75B) the OS will be reset. The latter is compatible with the operation condition of the competitive parts.

[2] The LM75 series is intentionally designed to provide two successive temperature data bytes (MSByte and LSByte) for the 11-bit data resolution and both bytes should be read in a typical application. In some specific applications, when only the MSByte is read using a single-byte read command, it often happens that if bit D7 of the LSByte is zero, then the device will hold the SDA bus in a LOW state forever, resulting in a bus hang-up problem, and the bus cannot be released until the device power is reset. This condition exists for the LM75A but not for the LM75B. For the LM75B the temperature can be read either one byte or two bytes without a hang-up problem.

[3] The bus time-out is included for releasing the LM75B device operation whenever the SDA input is kept at a LOW state for too long (longer than the LM75B time-out duration) due to a fault from the host. The trade-off for this option is the limitation of the I²C-bus low frequency operation to be limited to 20 Hz. This option is compatible with some of the latest versions of the competitive parts.

[4] The data hold time is improved to increase the timing margin in I²C-bus operation.

All information provided in this document is subject to legal disclaimers.

© NXP B.V. 2015. All rights reserved.

[5] The LM75B performs the temperature-to-data conversions with a much higher speed than the LM75A. While the LM75A takes almost the whole of conversion period (T_{conv}) time of about 100 ms to complete a conversion, the LM75B takes only about $^1/_{10}$ of the period, or about 10 ms. Therefore, the conversion period (T_{conv}) is the same, but the temperature conversion time ($t_{conv(T)}$) is different between the two parts. A shorter conversion time is applied to significantly reduce the device's average power dissipation. During each conversion period, when the conversion is completed, the LM75B becomes idled and the power is reduced, resulting in a lesser average power consumption.

8.3 Temperature accuracy

Because the local channel of the temperature sensor measures its own die temperature that is transferred from its body, the temperature of the device body must be stabilized and saturated for it to provide the stable readings. Because the LM75B operates at a low power level, the thermal gradient of the device package has a minor effect on the measurement. The accuracy of the measurement is more dependent upon the definition of the environment temperature, which is affected by different factors: the printed-circuit board on which the device is mounted; the air flow contacting the device body (if the ambient air temperature and the printed-circuit board temperature are much different, then the measurement may not be stable because of the different thermal paths between the die and the environment). The stabilized temperature liquid of a thermal bath will provide the best temperature environment when the device is completely dipped into it. A thermal probe with the device mounted inside a sealed-end metal tube located in consistent temperature air also provides a good method of temperature measurement.

If you would like to calculate the effect of self-heating, use Equation 1 below:

Equation 1 is the formula to calculate the effect of self-heating:

$$\Delta T = R_{th(j\text{-}a)} \times [(V_{DD} \times I_{DD(AV)}) + (V_{OL(SDA)} \times I_{OL(sink)(SDA)}) + (V_{OL(EVENT)} \times I_{OL(sink)EVENT})] \quad (1)$$

where:

$\Delta T = T_j - T_{amb}$

T_j = junction temperature

T_{amb} = ambient temperature

$R_{th(j\text{-}a)}$ = package thermal resistance

V_{DD} = supply voltage

$I_{DD(AV)}$ = average supply current

$V_{OL(SDA)}$ = LOW-level output voltage on pin SDA

$V_{OL(EVENT)}$ = LOW-level output voltage on pin $\overline{\text{EVENT}}$

$I_{OL(sink)(SDA)}$ = SDA output current LOW

$I_{OL(sink)EVENT}$ = $\overline{\text{EVENT}}$ output current LOW

Calculation example:

T_{amb} (typical temperature inside the notebook) = 50 °C

$I_{DD(AV)}$ = 400 μA

V_{DD} = 3.6 V

Maximum $V_{OL(SDA)}$ = 0.4 V

$I_{OL(sink)(SDA)}$ = 1 mA

All information provided in this document is subject to legal disclaimers.

© NXP B.V. 2015. All rights reserved.

$V_{OL(EVENT)}$ = 0.4 V

$I_{OL(sink)EVENT}$ = 3 mA

$R_{th(j-a)}$ = 56 °C/W

Self heating due to power dissipation is:

$$\Delta T = 56 \times [(3.6 \times 0.4) + (0.4 \times 3) + (0.4 \times 1)] = 56\ °C/W \times 3.04\ mW = 0.17\ °C \quad (2)$$

8.4 Noise effect

The LM75B device design includes the implementation of basic features for a good noise immunity:

- The low-pass filter on both the bus pins SCL and SDA;
- The hysteresis of the threshold voltages to the bus input signals SCL and SDA, about 500 mV minimum;
- All pins have ESD protection circuitry to prevent damage during electrical surges. The ESD protection on the address, OS, SCL and SDA pins it to ground. The latch-back based device breakdown voltage of address/OS is typically 11 V and SCL/SDA is typically 9.5 V at any supply voltage but will vary over process and temperature. Since there are no protection diodes from SCL or SDA to V_{CC}, the LM75B will not hold the I^2C lines LOW when V_{CC} is not supplied and therefore allow continued I^2C-bus operation if the LM75B is de-powered.

However, good layout practices and extra noise filters are recommended when the device is used in a very noisy environment:

- Use decoupling capacitors at V_{CC} pin.
- Keep the digital traces away from switching power supplies.
- Apply proper terminations for the long board traces.
- Add capacitors to the SCL and SDA lines to increase the low-pass filter characteristics.

All information provided in this document is subject to legal disclaimers.

© NXP B.V. 2015. All rights reserved.

9. Limiting values

Table 16. Limiting values

In accordance with the Absolute Maximum Rating System (IEC 60134).

Symbol	Parameter	Conditions	Min	Max	Unit
V_{CC}	supply voltage		–0.3	+6.0	V
V_I	input voltage	at input pins	–0.3	+6.0	V
I_I	input current	at input pins	–5.0	+5.0	mA
$I_{O(sink)}$	output sink current	on pin OS	-	10.0	mA
V_O	output voltage	on pin OS	–0.3	+6.0	V
T_{stg}	storage temperature		–65	+150	°C
T_j	junction temperature		-	150	°C

10. Recommended operating conditions

Table 17. Recommended operating characteristics

Symbol	Parameter	Conditions	Min	Typ	Max	Unit
V_{CC}	supply voltage		2.8	-	5.5	V
T_{amb}	ambient temperature		–55	-	+125	°C

All information provided in this document is subject to legal disclaimers.

© NXP B.V. 2015. All rights reserved.

11. Static characteristics

Table 18. Static characteristics

V_{CC} = 2.8 V to 5.5 V; T_{amb} = −55 °C to +125 °C; unless otherwise specified.

Symbol	Parameter	Conditions	Min	Typ[1]	Max	Unit
T_{acc}	temperature accuracy	T_{amb} = −25 °C to +100 °C	−2	-	+2	°C
		T_{amb} = −55 °C to +125 °C	−3	-	+3	°C
T_{res}	temperature resolution	11-bit digital temp data	-	0.125	-	°C
$t_{conv(T)}$	temperature conversion time	normal mode	-	10	-	ms
T_{conv}	conversion period	normal mode	-	100	-	ms
$I_{DD(AV)}$	average supply current	normal mode: I^2C-bus inactive	-	100	200	µA
		normal mode: I^2C-bus active; f_{SCL} = 400 kHz	-	-	300	µA
		shutdown mode	-	0.2	1.0	µA
V_{IH}	HIGH-level input voltage	digital pins (SCL, SDA, A2 to A0)	0.7 × V_{CC}	-	V_{CC} + 0.3	V
V_{IL}	LOW-level input voltage	digital pins	−0.3	-	0.3 × V_{CC}	V
$V_{I(hys)}$	hysteresis of input voltage	SCL and SDA pins	-	300	-	mV
		A2, A1, A0 pins	-	150	-	mV
I_{IH}	HIGH-level input current	digital pins; V_I = V_{CC}	−1.0	-	+1.0	µA
I_{IL}	LOW-level input current	digital pins; V_I = 0 V	−1.0	-	+1.0	µA
V_{OL}	LOW-level output voltage	SDA and OS pins; I_{OL} = 3 mA	-	-	0.4	V
		I_{OL} = 4 mA	-	-	0.8	V
I_{LO}	output leakage current	SDA and OS pins; V_{OH} = V_{CC}	-	-	10	µA
N_{fault}	number of faults	programmable; conversions in overtemperature-shutdown fault queue	1	-	6	
$T_{th(ots)}$	overtemperature shutdown threshold temperature	default value	-	80	-	°C
T_{hys}	hysteresis temperature	default value	-	75	-	°C
C_i	input capacitance	digital pins	-	20	-	pF

[1] Typical values are at V_{CC} = 3.3 V and T_{amb} = 25 °C.

All information provided in this document is subject to legal disclaimers.

© NXP B.V. 2015. All rights reserved.

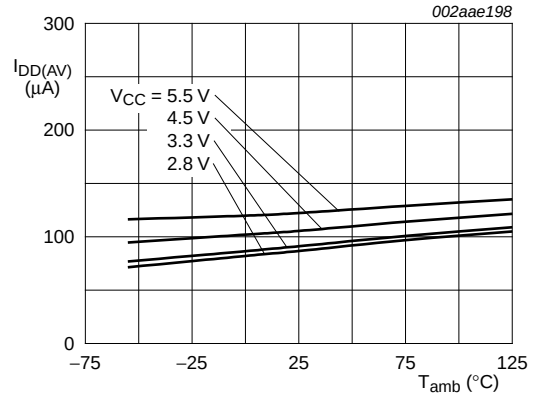

Fig 14. Average supply current versus temperature; I²C-bus inactive

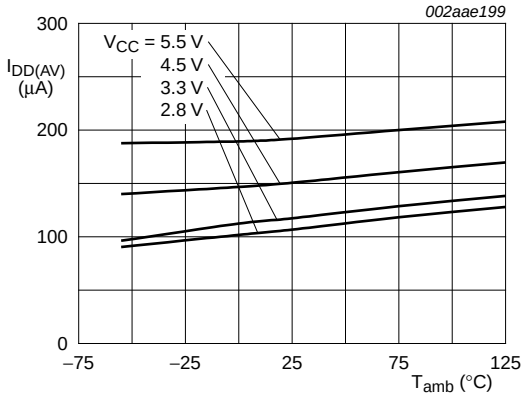

Fig 15. Average supply current versus temperature; I²C-bus active

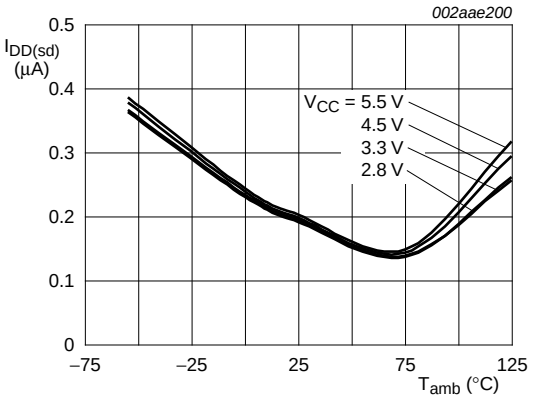

Fig 16. Shutdown mode supply current versus temperature

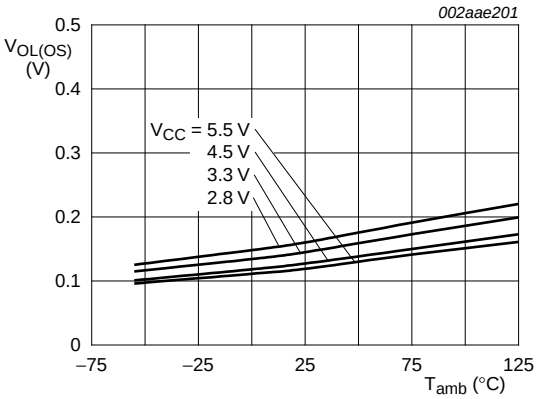

Fig 17. LOW-level output voltage on pin OS versus temperature; I_{OL} = 4 mA

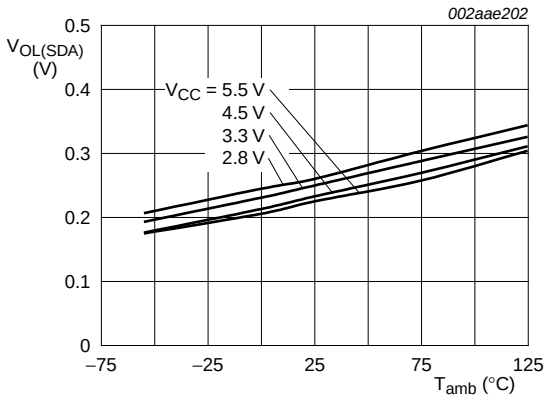

Fig 18. LOW-level output voltage on pin SDA versus temperature; I_{OL} = 4 mA

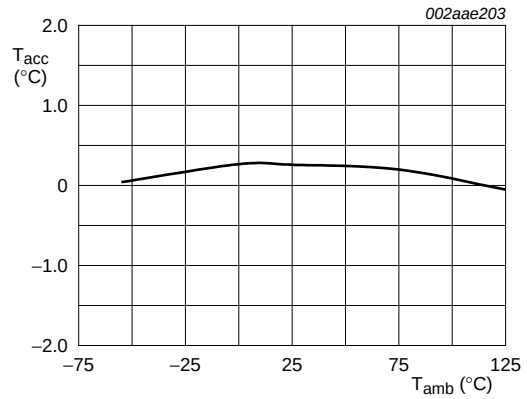

Fig 19. Typical temperature accuracy versus temperature; V_{CC} = 3.3 V

All information provided in this document is subject to legal disclaimers.

© NXP B.V. 2015. All rights reserved.

12. Dynamic characteristics

Table 19. I^2C-bus interface dynamic characteristics[1]

V_{CC} = 2.8 V to 5.5 V; T_{amb} = −55 °C to +125 °C; unless otherwise specified.

Symbol	Parameter	Conditions	Min	Typ	Max	Unit
f_{SCL}	SCL clock frequency	see Figure 20	0.02	-	400	kHz
t_{HIGH}	HIGH period of the SCL clock		0.6	-	-	µs
t_{LOW}	LOW period of the SCL clock		1.3	-	-	µs
$t_{HD;STA}$	hold time (repeated) START condition		100	-	-	ns
$t_{SU;DAT}$	data set-up time		100	-	-	ns
$t_{HD;DAT}$	data hold time		0	-	-	ns
$t_{SU;STO}$	set-up time for STOP condition		100	-	-	ns
t_f	fall time	SDA and OS outputs; C_L = 400 pF; I_{OL} = 3 mA	-	250	-	ns
t_{to}	time-out time	[2][3]	75	-	200	ms

[1] These specifications are guaranteed by design and not tested in production.

[2] This is the SDA time LOW for reset of serial interface.

[3] Holding the SDA line LOW for a time greater than t_{to} will cause the LM75B to reset SDA to the idle state of the serial bus communication (SDA set HIGH).

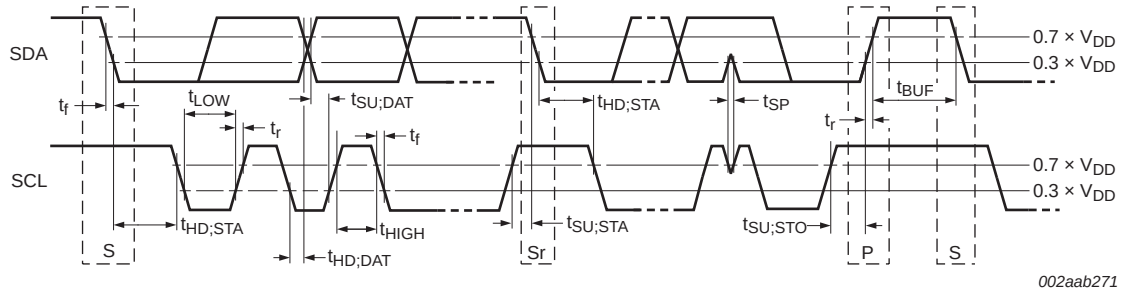

Fig 20. Timing diagram

All information provided in this document is subject to legal disclaimers.

© NXP B.V. 2015. All rights reserved.

13. Package outline

SO8: plastic small outline package; 8 leads; body width 3.9 mm **SOT96-1**

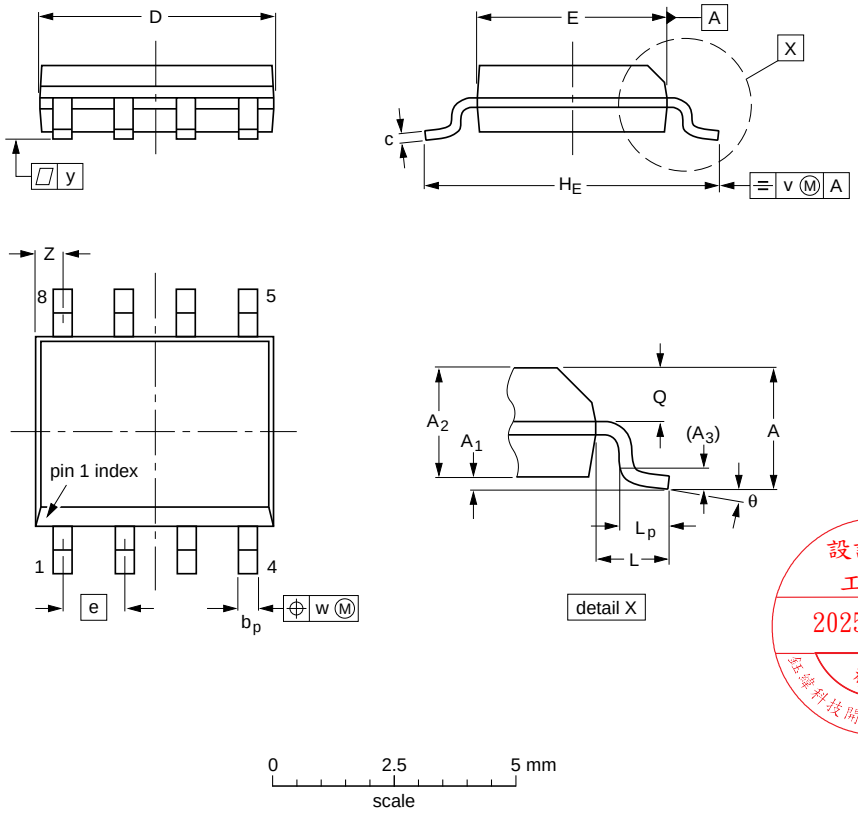

設計驗證
工程課
2025 -01- 14
發行
智慧科技開發股份有限公司

DIMENSIONS (inch dimensions are derived from the original mm dimensions)

UNIT	A max.	A_1	A_2	A_3	b_p	c	$D^{(1)}$	$E^{(2)}$	e	H_E	L	L_p	Q	v	w	y	$Z^{(1)}$	θ
mm	1.75	0.25 0.10	1.45 1.25	0.25	0.49 0.36	0.25 0.19	5.0 4.8	4.0 3.8	1.27	6.2 5.8	1.05	1.0 0.4	0.7 0.6	0.25	0.25	0.1	0.7 0.3	8° 0°
inches	0.069	0.010 0.004	0.057 0.049	0.01	0.019 0.014	0.0100 0.0075	0.20 0.19	0.16 0.15	0.05	0.244 0.228	0.041	0.039 0.016	0.028 0.024	0.01	0.01	0.004	0.028 0.012	

Notes

1. Plastic or metal protrusions of 0.15 mm (0.006 inch) maximum per side are not included.
2. Plastic or metal protrusions of 0.25 mm (0.01 inch) maximum per side are not included.

OUTLINE VERSION	REFERENCES				EUROPEAN PROJECTION	ISSUE DATE
	IEC	JEDEC	JEITA			
SOT96-1	076E03	MS-012				~~99-12-27~~ 03-02-18

Fig 21. Package outline SOT96-1 (SO8)

All information provided in this document is subject to legal disclaimers.

© NXP B.V. 2015. All rights reserved.

TSSOP8: plastic thin shrink small outline package; 8 leads; body width 3 mm **SOT505-1**

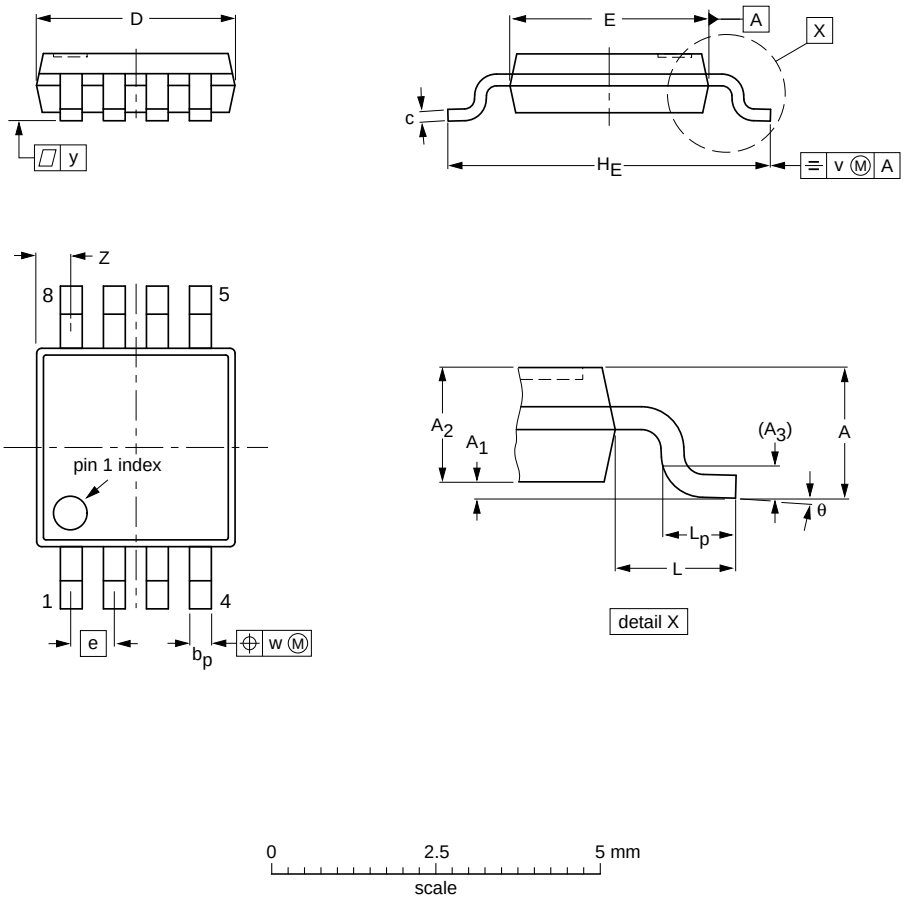

DIMENSIONS (mm are the original dimensions)

UNIT	A max.	A_1	A_2	A_3	b_p	c	$D^{(1)}$	$E^{(2)}$	e	H_E	L	L_p	v	w	y	$Z^{(1)}$	θ
mm	1.1	0.15 0.05	0.95 0.80	0.25	0.45 0.25	0.28 0.15	3.1 2.9	3.1 2.9	0.65	5.1 4.7	0.94	0.7 0.4	0.1	0.1	0.1	0.70 0.35	6° 0°

Notes

1. Plastic or metal protrusions of 0.15 mm maximum per side are not included.
2. Plastic or metal protrusions of 0.25 mm maximum per side are not included.

OUTLINE VERSION	REFERENCES				EUROPEAN PROJECTION	ISSUE DATE
	IEC	JEDEC	JEITA			
SOT505-1						~~99-04-09~~ 03-02-18

Fig 22. Package outline SOT505-1 (TSSOP8)

All information provided in this document is subject to legal disclaimers.

© NXP B.V. 2015. All rights reserved.

XSON8: plastic extremely thin small outline package; no leads; 8 terminals; body 3 x 2 x 0.5 mm **SOT996-2**

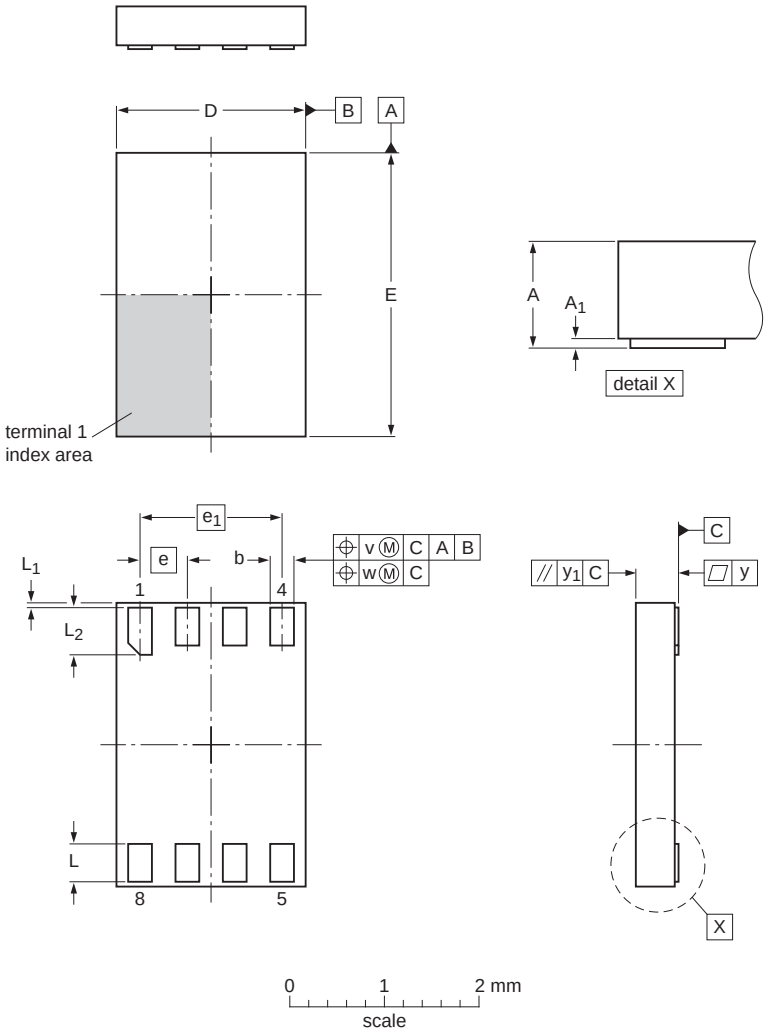

Dimensions (mm are the original dimensions)

Unit[1]		A	A_1	b	D	E	e	e_1	L	L_1	L_2	v	w	y	y_1
mm	max	0.5	0.05	0.35	2.1	3.1	0.5	1.5	0.5	0.15	0.6	0.1	0.05	0.05	0.1
	nom														
	min		0.00	0.15	1.9	2.9			0.3	0.05	0.4				

sot996-2_po

Outline version	References				European projection	Issue date
	IEC	JEDEC	JEITA			
SOT996-2						~~07-12-21~~ 12-11-20

Fig 23. Package outline SOT996-2 (XSON8U)

All information provided in this document is subject to legal disclaimers.

© NXP B.V. 2015. All rights reserved.

HWSON8: plastic thermal enhanced very very thin small outline package; no leads; 8 terminals; body 2 x 3 x 0.75 mm **SOT1069-2**

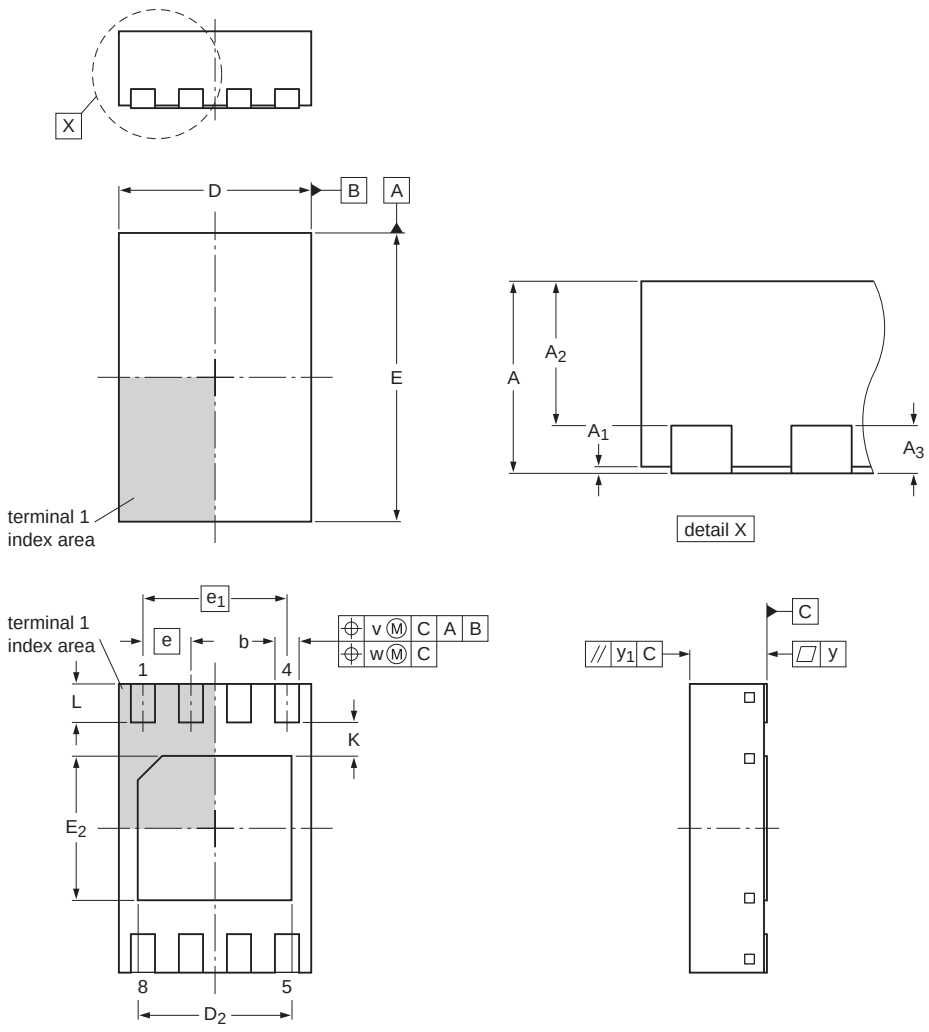

Dimensions

Unit		$A^{(1)}$	A_1	A_2	A_3	b	$D^{(1)}$	D_2	$E^{(1)}$	E_2	e	e_1	K	L	v	w	y	y_1
	max	0.80	0.05	0.65		0.30	2.1	1.6	3.1	1.6			0.40	0.45				
mm	nom	0.75	0.02	0.55	0.2	0.25	2.0	1.5	3.0	1.5	0.5	1.5	0.35	0.40	0.1	0.05	0.05	0.05
	min	0.70	0.00	0.45		0.18	1.9	1.4	2.9	1.4			0.30	0.35				

Note
1. Plastic or metal protrusions of 0.075 mm maximum per side are not included.

sot1069-2_po

Outline version	References				European projection	Issue date
	IEC	JEDEC	JEITA			
SOT1069-2	- - -	MO-229	- - -			~~09-11-18~~ 12-04-18

Fig 24. Package outline SOT1069-2 (HWSON8)

All information provided in this document is subject to legal disclaimers.

© NXP B.V. 2015. All rights reserved.

14. Soldering of SMD packages

This text provides a very brief insight into a complex technology. A more in-depth account of soldering ICs can be found in Application Note *AN10365 "Surface mount reflow soldering description"*.

14.1 Introduction to soldering

Soldering is one of the most common methods through which packages are attached to Printed Circuit Boards (PCBs), to form electrical circuits. The soldered joint provides both the mechanical and the electrical connection. There is no single soldering method that is ideal for all IC packages. Wave soldering is often preferred when through-hole and Surface Mount Devices (SMDs) are mixed on one printed wiring board; however, it is not suitable for fine pitch SMDs. Reflow soldering is ideal for the small pitches and high densities that come with increased miniaturization.

14.2 Wave and reflow soldering

Wave soldering is a joining technology in which the joints are made by solder coming from a standing wave of liquid solder. The wave soldering process is suitable for the following:

- Through-hole components
- Leaded or leadless SMDs, which are glued to the surface of the printed circuit board

Not all SMDs can be wave soldered. Packages with solder balls, and some leadless packages which have solder lands underneath the body, cannot be wave soldered. Also, leaded SMDs with leads having a pitch smaller than ~0.6 mm cannot be wave soldered, due to an increased probability of bridging.

The reflow soldering process involves applying solder paste to a board, followed by component placement and exposure to a temperature profile. Leaded packages, packages with solder balls, and leadless packages are all reflow solderable.

Key characteristics in both wave and reflow soldering are:

- Board specifications, including the board finish, solder masks and vias
- Package footprints, including solder thieves and orientation
- The moisture sensitivity level of the packages
- Package placement
- Inspection and repair
- Lead-free soldering versus SnPb soldering

14.3 Wave soldering

Key characteristics in wave soldering are:

- Process issues, such as application of adhesive and flux, clinching of leads, board transport, the solder wave parameters, and the time during which components are exposed to the wave
- Solder bath specifications, including temperature and impurities

All information provided in this document is subject to legal disclaimers.

© NXP B.V. 2015. All rights reserved.

14.4 Reflow soldering

Key characteristics in reflow soldering are:

- Lead-free versus SnPb soldering; note that a lead-free reflow process usually leads to higher minimum peak temperatures (see Figure 25) than a SnPb process, thus reducing the process window
- Solder paste printing issues including smearing, release, and adjusting the process window for a mix of large and small components on one board
- Reflow temperature profile; this profile includes preheat, reflow (in which the board is heated to the peak temperature) and cooling down. It is imperative that the peak temperature is high enough for the solder to make reliable solder joints (a solder paste characteristic). In addition, the peak temperature must be low enough that the packages and/or boards are not damaged. The peak temperature of the package depends on package thickness and volume and is classified in accordance with Table 20 and 21

Table 20. SnPb eutectic process (from J-STD-020D)

Package thickness (mm)	Package reflow temperature (°C)	
	Volume (mm^3)	
	< 350	≥ 350
< 2.5	235	220
≥ 2.5	220	220

Table 21. Lead-free process (from J-STD-020D)

Package thickness (mm)	Package reflow temperature (°C)		
	Volume (mm^3)		
	< 350	350 to 2000	> 2000
< 1.6	260	260	260
1.6 to 2.5	260	250	245
> 2.5	250	245	245

Moisture sensitivity precautions, as indicated on the packing, must be respected at all times.

Studies have shown that small packages reach higher temperatures during reflow soldering, see Figure 25.

All information provided in this document is subject to legal disclaimers.

© NXP B.V. 2015. All rights reserved.

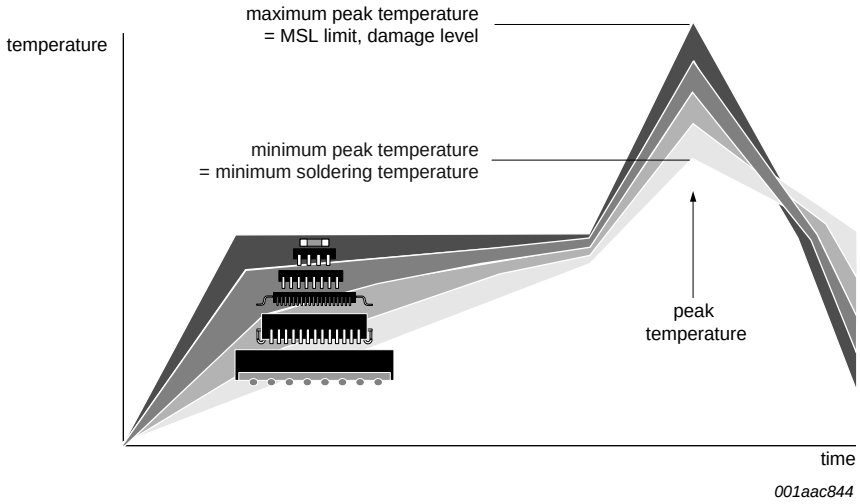

MSL: Moisture Sensitivity Level

Fig 25. Temperature profiles for large and small components

For further information on temperature profiles, refer to Application Note *AN10365 "Surface mount reflow soldering description"*.

All information provided in this document is subject to legal disclaimers.

© NXP B.V. 2015. All rights reserved.

15. Soldering: PCB footprints

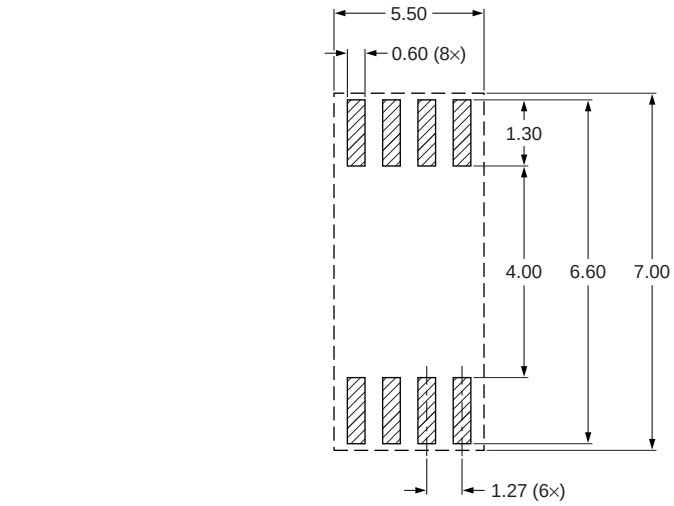

Fig 26. PCB footprint for SOT96-1 (SO8); reflow soldering

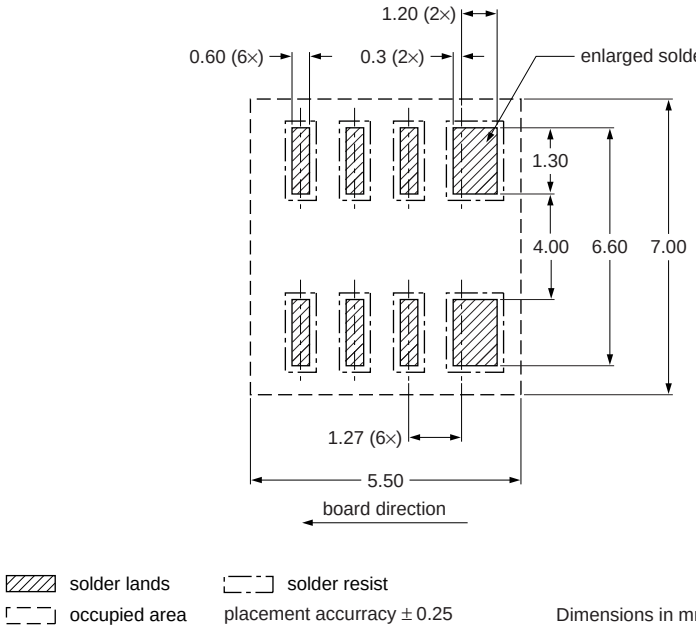

Fig 27. PCB footprint for SOT96-1 (SO8); wave soldering

All information provided in this document is subject to legal disclaimers.

© NXP B.V. 2015. All rights reserved.

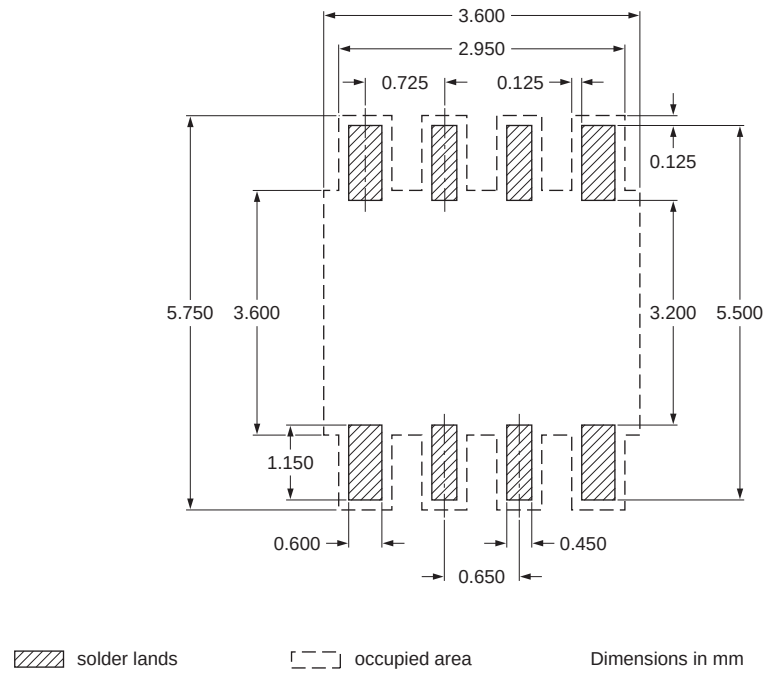

Fig 28. PCB footprint for SOT505-1 (TSSOP8); reflow soldering

All information provided in this document is subject to legal disclaimers.

© NXP B.V. 2015. All rights reserved.

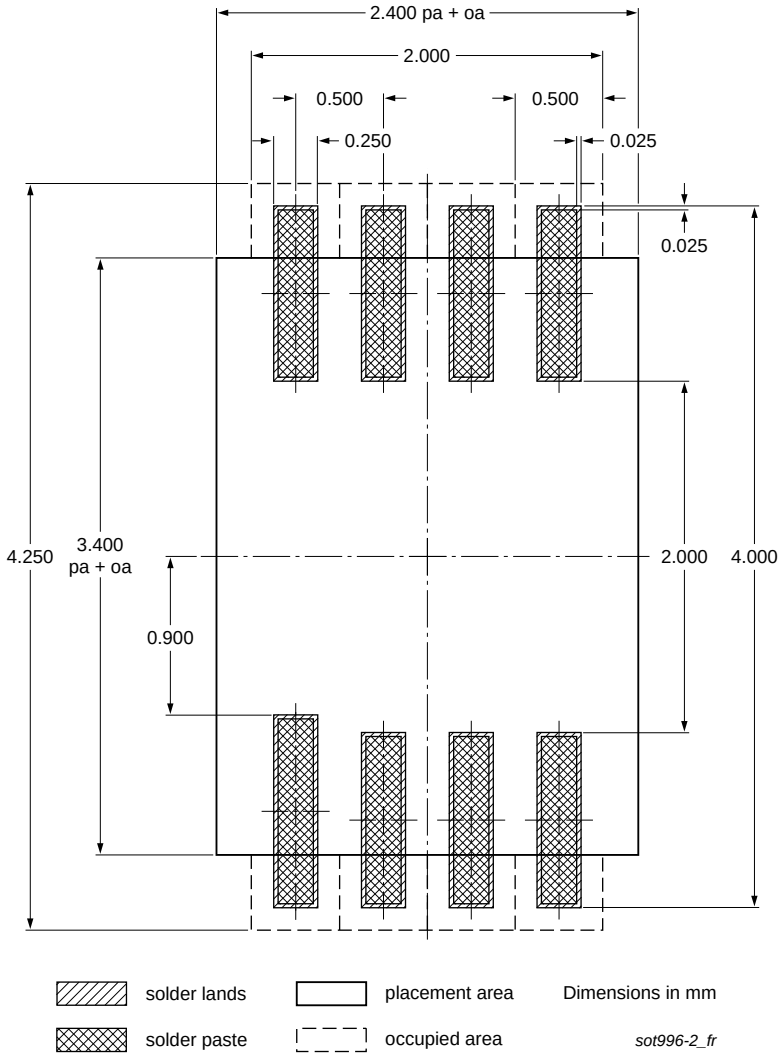

Fig 29. PCB footprint for SOT996-2 (XSON8U); reflow soldering

All information provided in this document is subject to legal disclaimers.

© NXP B.V. 2015. All rights reserved.

Footprint information for reflow soldering of HWSON8 package SOT1069-2

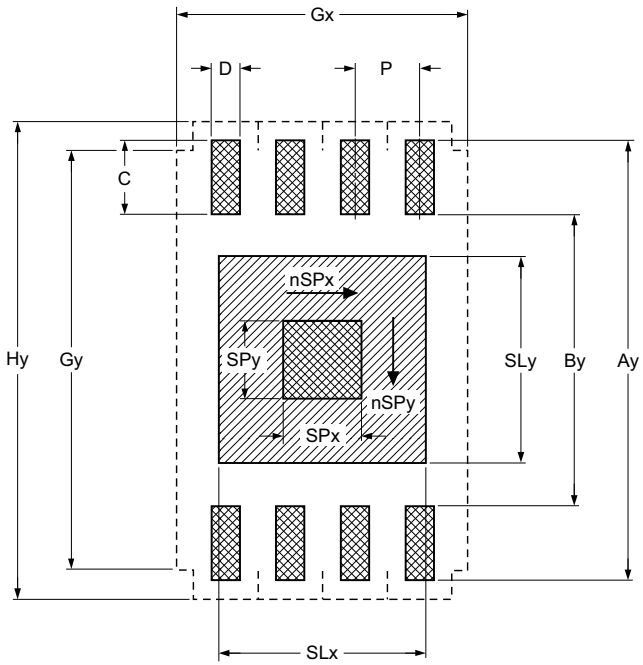

solder land

solder paste deposit

solder land plus solder paste

occupied area

DIMENSIONS in mm

P	Ay	By	C	D	SLx	SLy	SPx	SPy	Gx	Gy	Hy
0.5	3.45	2.2	0.625	0.25	1.6	1.6	0.6	0.6	2.25	3.25	3.7

nSPx	nSPy
1	1

Issue date ~~12-02-09~~ 12-02-22

sot1069-2_fr

Fig 30. PCB footprint for SOT1069-2 (HWSON8); reflow soldering

All information provided in this document is subject to legal disclaimers.

© NXP B.V. 2015. All rights reserved.

16. Abbreviations

Table 22. Abbreviations

Acronym	Description
A-to-D	Analog-to-Digital
CDM	Charged-Device Model
ESD	ElectroStatic Discharge
HBM	Human Body Model
I^2C-bus	Inter-Integrated Circuit bus
I/O	Input/Output
LSB	Lease Significant Bit
LSByte	Least Significant Byte
MSB	Most Significant Bit
MSByte	Most Significant Byte
POR	Power-On Reset

17. Revision history

Table 23. Revision history

Document ID	Release date	Data sheet status	Change notice	Supersedes
LM75B v.6.1	20150206	Product data sheet	-	LM75B v.6
Modifications:	• Section 7.4.1 “Pointer register”: Added text “However, the first temperature reading...” to end of section. Further explanation of actual operation; no change to device.			
LM75B v.6	20140811	Product data sheet	-	LM75B v.5
LM75B v.5	20140122	Product data sheet	-	LM75B v.4
LM75B v.4	20130207	Product data sheet	-	LM75B v.3
LM75B v.3	20111227	Product data sheet	-	LM75B v.2
LM75B v.2	20081209	Product data sheet	-	LM75B v.1
LM75B v.1	20081204	Product data sheet	-	-

All information provided in this document is subject to legal disclaimers.

© NXP B.V. 2015. All rights reserved.

18. Legal information

18.1 Data sheet status

Document status[1][2]	Product status[3]	Definition
Objective [short] data sheet	Development	This document contains data from the objective specification for product development.
Preliminary [short] data sheet	Qualification	This document contains data from the preliminary specification.
Product [short] data sheet	Production	This document contains the product specification.

[1] Please consult the most recently issued document before initiating or completing a design.

[2] The term 'short data sheet' is explained in section "Definitions".

[3] The product status of device(s) described in this document may have changed since this document was published and may differ in case of multiple devices. The latest product status information is available on the Internet at URL http://www.nxp.com.

18.2 Definitions

Draft — The document is a draft version only. The content is still under internal review and subject to formal approval, which may result in modifications or additions. NXP Semiconductors does not give any representations or warranties as to the accuracy or completeness of information included herein and shall have no liability for the consequences of use of such information.

Short data sheet — A short data sheet is an extract from a full data sheet with the same product type number(s) and title. A short data sheet is intended for quick reference only and should not be relied upon to contain detailed and full information. For detailed and full information see the relevant full data sheet, which is available on request via the local NXP Semiconductors sales office. In case of any inconsistency or conflict with the short data sheet, the full data sheet shall prevail.

Product specification — The information and data provided in a Product data sheet shall define the specification of the product as agreed between NXP Semiconductors and its customer, unless NXP Semiconductors and customer have explicitly agreed otherwise in writing. In no event however, shall an agreement be valid in which the NXP Semiconductors product is deemed to offer functions and qualities beyond those described in the Product data sheet.

18.3 Disclaimers

Limited warranty and liability — Information in this document is believed to be accurate and reliable. However, NXP Semiconductors does not give any representations or warranties, expressed or implied, as to the accuracy or completeness of such information and shall have no liability for the consequences of use of such information. NXP Semiconductors takes no responsibility for the content in this document if provided by an information source outside of NXP Semiconductors.

In no event shall NXP Semiconductors be liable for any indirect, incidental, punitive, special or consequential damages (including - without limitation - lost profits, lost savings, business interruption, costs related to the removal or replacement of any products or rework charges) whether or not such damages are based on tort (including negligence), warranty, breach of contract or any other legal theory.

Notwithstanding any damages that customer might incur for any reason whatsoever, NXP Semiconductors' aggregate and cumulative liability towards customer for the products described herein shall be limited in accordance with the *Terms and conditions of commercial sale* of NXP Semiconductors.

Right to make changes — NXP Semiconductors reserves the right to make changes to information published in this document, including without limitation specifications and product descriptions, at any time and without notice. This document supersedes and replaces all information supplied prior to the publication hereof.

Suitability for use — NXP Semiconductors products are not designed, authorized or warranted to be suitable for use in life support, life-critical or safety-critical systems or equipment, nor in applications where failure or malfunction of an NXP Semiconductors product can reasonably be expected to result in personal injury, death or severe property or environmental damage. NXP Semiconductors and its suppliers accept no liability for inclusion and/or use of NXP Semiconductors products in such equipment or applications and therefore such inclusion and/or use is at the customer's own risk.

Applications — Applications that are described herein for any of these products are for illustrative purposes only. NXP Semiconductors makes no representation or warranty that such applications will be suitable for the specified use without further testing or modification.

Customers are responsible for the design and operation of their applications and products using NXP Semiconductors products, and NXP Semiconductors accepts no liability for any assistance with applications or customer product design. It is customer's sole responsibility to determine whether the NXP Semiconductors product is suitable and fit for the customer's applications and products planned, as well as for the planned application and use of customer's third party customer(s). Customers should provide appropriate design and operating safeguards to minimize the risks associated with their applications and products.

NXP Semiconductors does not accept any liability related to any default, damage, costs or problem which is based on any weakness or default in the customer's applications or products, or the application or use by customer's third party customer(s). Customer is responsible for doing all necessary testing for the customer's applications and products using NXP Semiconductors products in order to avoid a default of the applications and the products or of the application or use by customer's third party customer(s). NXP does not accept any liability in this respect.

Limiting values — Stress above one or more limiting values (as defined in the Absolute Maximum Ratings System of IEC 60134) will cause permanent damage to the device. Limiting values are stress ratings only and (proper) operation of the device at these or any other conditions above those given in the Recommended operating conditions section (if present) or the Characteristics sections of this document is not warranted. Constant or repeated exposure to limiting values will permanently and irreversibly affect the quality and reliability of the device.

Terms and conditions of commercial sale — NXP Semiconductors products are sold subject to the general terms and conditions of commercial sale, as published at http://www.nxp.com/profile/terms, unless otherwise agreed in a valid written individual agreement. In case an individual agreement is concluded only the terms and conditions of the respective agreement shall apply. NXP Semiconductors hereby expressly objects to applying the customer's general terms and conditions with regard to the purchase of NXP Semiconductors products by customer.

No offer to sell or license — Nothing in this document may be interpreted or construed as an offer to sell products that is open for acceptance or the grant, conveyance or implication of any license under any copyrights, patents or other industrial or intellectual property rights.

All information provided in this document is subject to legal disclaimers.

© NXP B.V. 2015. All rights reserved.

Export control — This document as well as the item(s) described herein may be subject to export control regulations. Export might require a prior authorization from competent authorities.

Non-automotive qualified products — Unless this data sheet expressly states that this specific NXP Semiconductors product is automotive qualified, the product is not suitable for automotive use. It is neither qualified nor tested in accordance with automotive testing or application requirements. NXP Semiconductors accepts no liability for inclusion and/or use of non-automotive qualified products in automotive equipment or applications.

In the event that customer uses the product for design-in and use in automotive applications to automotive specifications and standards, customer (a) shall use the product without NXP Semiconductors' warranty of the product for such automotive applications, use and specifications, and (b) whenever customer uses the product for automotive applications beyond NXP Semiconductors' specifications such use shall be solely at customer's own risk, and (c) customer fully indemnifies NXP Semiconductors for any liability, damages or failed product claims resulting from customer design and use of the product for automotive applications beyond NXP Semiconductors' standard warranty and NXP Semiconductors' product specifications.

Translations — A non-English (translated) version of a document is for reference only. The English version shall prevail in case of any discrepancy between the translated and English versions.

18.4 Trademarks

Notice: All referenced brands, product names, service names and trademarks are the property of their respective owners.

I^2C-bus — logo is a trademark of NXP Semiconductors N.V.

19. Contact information

For more information, please visit: **http://www.nxp.com**

For sales office addresses, please send an email to: **salesaddresses@nxp.com**

All information provided in this document is subject to legal disclaimers.

© NXP B.V. 2015. All rights reserved.

20. Contents

1 General description 1
2 Features and benefits 1
3 Applications 2
4 Ordering information 3
4.1 Ordering options 3
5 Block diagram 4
6 Pinning information 4
6.1 Pinning 4
6.2 Pin description 5
7 Functional description 5
7.1 General operation 5
7.2 I^2C-bus serial interface 7
7.2.1 Bus fault time-out 7
7.3 Slave address 7
7.4 Register list 7
7.4.1 Pointer register 8
7.4.2 Configuration register 8
7.4.3 Temperature register 9
7.4.4 Overtemperature shutdown threshold (Tos) and hysteresis (Thyst) registers 10
7.5 OS output and polarity 11
7.6 OS comparator and interrupt modes 11
7.7 OS fault queue 12
7.8 Shutdown mode 12
7.9 Power-up default and power-on reset 12
7.10 Protocols for writing and reading the registers 13
8 Application design-in information 16
8.1 Typical application 16
8.2 LM75A and LM75B comparison 16
8.3 Temperature accuracy 17
8.4 Noise effect 18
9 Limiting values 19
10 Recommended operating conditions 19
11 Static characteristics 20
12 Dynamic characteristics 22
13 Package outline 23
14 Soldering of SMD packages 27
14.1 Introduction to soldering 27
14.2 Wave and reflow soldering 27
14.3 Wave soldering 27
14.4 Reflow soldering 28
15 Soldering: PCB footprints 30
16 Abbreviations 34
17 Revision history 34
18 Legal information 35
18.1 Data sheet status 35
18.2 Definitions 35
18.3 Disclaimers 35
18.4 Trademarks 36
19 Contact information 36
20 Contents 37

Please be aware that important notices concerning this document and the product(s) described herein, have been included in section 'Legal information'.

© NXP B.V. 2015. **All rights reserved.**

For more information, please visit: http://www.nxp.com
For sales office addresses, please send an email to: salesaddresses@nxp.com

Date of release: 6 February 2015
Document identifier: LM75B

Recommended Reflow Soldering Profile

Limiting Values*

The below temperature profile for moisture sensitivity characterization is based on the IPC/JEDEC joint industry standard: J-STD-020D-01.

Profile Feature	SnPb eutectic assembly	Pb-free assembly
Average ramp-up rate (T_{smax} to T_p)	3 °C/s maximum	3 °C/s maximum
Preheat		
Temperature minimum (T_{smin})	100 °C	150 °C
Temperature maximum (T_{smax})	150 °C	200 °C
Time (t_{smin} to t_{smax})	60 s to 120 s	60 s to 180 s
Time maintained above		
Temperature (T_L)	183 °C	217 °C
Time (t_L)	60 s to 150 s	60 s to 150 s
Peak/classification temperature (T_p)	235 °C	260 °C
Number of allowed reflow cycles	3	3
Time within 5 °C of actual peak temperature (t_p)	10 s to 30 s	20 s to 40 s
Ramp-down rate	6 °C/s maximum	6 °C/s maximum
Time 25 °C to peak temperature	6 minutes maximum	8 minutes maximum

* applicable for devices from NXP Business Line GA Discretes. Pb-free assembly data on base of SnAg3.8Cu0.7 (SAC).

Reflow Soldering Profile

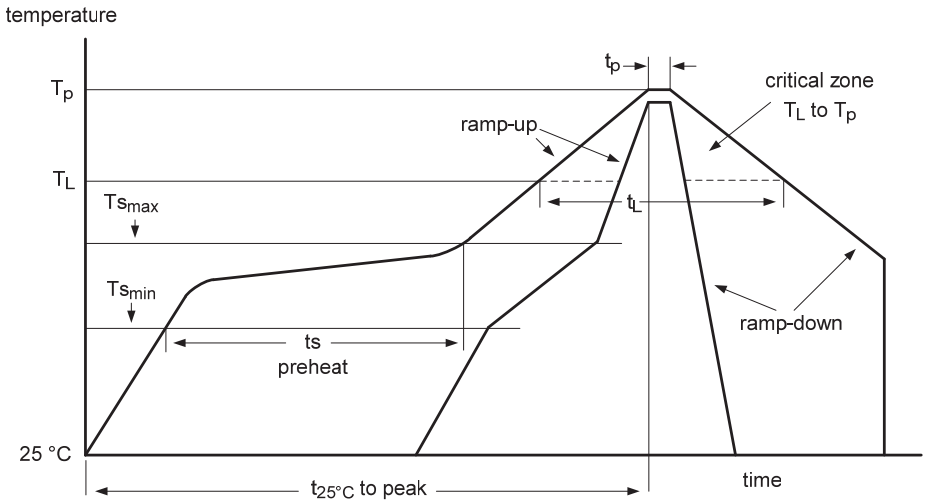

All information hereunder is per NXP Semiconductors' best knowledge. In case NXP Semiconductors has tested the product, this documentation reflects the outcome of the analysis of the actually tested parts only. This document does not provide for any representation or warranty express or implied by NXP Semiconductors. Applications and test results, analysis or assessments that are described herein are for illustrative purposes only. NXP Semiconductors makes no representation or warranty neither that such applications will be suitable for the specified use nor that the information, test results, analysis or assessments are reliable without further testing or modification through customer.