PDF-XChange Viewer Click to buy NOW! www.docu-track.com

承 認 書

SPECIFICATION FOR APPROVAL

DOC. NO. : JN87-01060-B01

ISSUE DATE : 2015/03/24

CUSTOMER : 佳世達 2K.L2198.041

PART NAME : LVDS 9 B TYPE

PART NO. : 187060-41221

APP. DATE :

MANUFACTURER SIGNATURE

ROHS 韋冠仰

禾昌興業股份有限公司 TEL:(03)376-6666 FAX:(03)376-2222 桃園市龜山工業區興安路9-1號

禾昌興業股份有限公司 資料中心發行

■ P-TWO INDUSTRIES INC.
NO. 9, SHIN HWA RD, KWEI SHAN IND. PARK TAOYUAN, 330 TAIWAN, R.O.C.
TEL:00886-3-3766666 FAX:00886-3-3762222

□ P-TWO INDUSTRIES(H.K) CO.LTD.
NO.17-20,HONGYE 13RD.138 INDUSTRIAL ZONE.TANGXIA TOWN DONGGUAN,GUANGDONG,CHINA
TEL:86-769-7913152 FAX:86-769-7913150

□ P-TWO TECHNOLOGY CO.,LTD.
NO. 158-86 HUA SHAN RD.FENG QIAO INDUSTRIAL PARK OF SUZHOU NEW DISTRICT,JIANGSU,CHINA
TEL:86-512-6617666 FAX:86-512-6617222

PDF-XChange Viewer Click to buy NOW! www.docu-track.com

PDF-XChange Viewer Click to buy NOW! www.docu-track.com

HISTORY REVISION

History Revision

Rev	Date	Page	Reason for revision	ISS.
B01	2015.03.24	1 of 18	Initial Release	Gino.wei

This document contains information that is proprietary to P-TWO INC., and should not be used without permission.

PDF-XChange Viewer Click to buy NOW! www.docu-track.com

PDF-XChange Viewer Click to buy NOW! www.docu-track.com

TABLE OF CONTENT

I. SPECIFICATION OF PRODUCT

II. INFRARED REFLOW REFERENCE CONDITION

III. PRECAUTION FOR USE

IV. ORDERING INFORMATION

V. MATERIAL REFERENCE TABLE

VI. CONTACT MATERIAL CERTIFICATE OF SHELL

VII. CONTACT MATERIAL CERTIFICATE OF TERMINAL

VIII. CONTACT MATERIAL CERTIFICATE OF GROUND

IX. PLASTIC MATERIAL CERTIFICATE OF HOUSING

X. THE CONFIRMATION OF PROHIBITED/CONTROLLED SUBSTANCES

XI. ENGINEERING DRAWING OF PRODUCTS INCLUDE PRODUCT & PACKAGE

This document contains information that is proprietary to P-TWO INC., and should not be used without permission.

PDF-XChange Viewer Click to buy NOW! www.docu-track.com

PDF-XChange Viewer Click to buy NOW! www.docu-track.com

SPECIFICATION OF PRODUCT

1. Scope
   This product specification contains the test method the general performance and requirement for interconnection system connectors the specification covers 187060-41221 series connectors manufactured by P-TWO INDUSTRIES INC.
2. Construction and physical dimensions shall be same as specified by drawings

3. Materials and Finish
   Terminal：Copper Alloy. Plating: Contact area Au over Ni, Soldering area Tin over Ni.
   Ground：Stainless Steel , Plating：Tin over Ni.
   Shell：Stainless Steel , Plating：Tin over Ni.
   Lock Pin：Stainless Steel
   Housing：Heat Resistance Plastic, LCP (UL94 V-0)

4. Characteristics
   Voltage rating： 200V (DC/AC)/Contact
   Current rating： 0.5Amps/Contact
   Operating temperature range： -40°C to +80°C
   Storage temperature range： -40°C to +80°C

5. GP requires substances (level1) forbidden (including orders placed to subcontractors)
6. Mechanical Performance

Item	Description	Test method & Condition	Requirement
6-1	Mating Force	Measure force necessary to mate between the counterpart connectors (Excluding lock)	1.96N X n(Max.) “n”=number of pins
6-2	Unmating Force	Measure force necessary to mate between the counterpart connectors (Excluding lock)	0.25N X n(Min.) “n”=number of pins
6-3	Durability	Mate and unmate specimens for 50 cycles (Excluding lock)	Contact resistance shall be 80mΩ Max.

This document contains information that is proprietary to P-TWO INC., and should not be used without permission.

PDF-XChange Viewer Click to buy NOW! www.docu-track.com

PDF-XChange Viewer Click to buy NOW! www.docu-track.com

SPECIFICATION OF PRODUCT

6-4	Contact Retention	It should be tested in accordance with method 2007 of MIL-SDT-1344A The end of terminal shall be pulled in a perpendicular to base housing at a constant speed of 25.4 mm/min.	1.5 N (150 gf) Min./per pin
6-5	Vibration	It should be tested in accordance with method 2005 of MIL-SDT-1344A Test condition I. Frequency：10-50-10Hz Amplitude：1.5 mm Direction: Three perpendicular axes (X.Y.Z)/2hours，6hours in total	Appearance is no damage There shall be no current discontinuity than 1 microsecond Contact resistance shall be 80mΩ or less after the test.
6-6	Mechanical Shock	It should be tested in accordance with method 2004 of MIL-SDT-1344A Test condition A. Waveform: half-sine Peak value(G'S)：50G'S Direction: 3 mutually perpendicular axes (X.Y.Z) for 3 times (18 total) Duration Time：11 microsecond Velocity change: 11.3 ft/sec (Max：20mV, 10mA)	Appearance is no damage There shall be no current discontinuity than 1 microsecond Contact resistance shall be 80mΩ or less after the test.
6-7	Lock strength	Measure the lock intensity as the connector (of the counterpart connectors) at the cable side is pulled.(Forceful pull is applied at the first test.)	Connectors should not be apart by forceful pull of 49N(Max.) at the first test.

This document contains information that is proprietary to P-TWO INC., and should not be used without permission.

PDF-XChange Viewer Click to buy NOW! www.docu-track.com

SPECIFICATION OF PRODUCT

7. Electrical performance

Item	Description	Test method & Condition	Requirement
7-1	Low Level Contact Resistance	It should be tested to compare with method 3002 of MIL-STD-1344A Measure by low level (Max：20mV, 10mA)	Initial: 40mΩ Max Final: 80mΩ Max
7-2	Insulation Resistance	It should be tested to compare with method 3003 of MIL-STD-1344A When 100V DC is applied between adjacent contacts and insulation resistance is measured with in one minutes	100MΩ
7-3	Dielectric Withstanding Voltage	The connector shall be tested in accordance with method 3001 of MIL-STD 1344A.When the 500V AC r.m.s for one minute applied between adjacent contacts.	There shall be no current leakage and flashover or damage detected
7-4	Temperature rise	Apply specified current to contacts connected in series.	Temperature rise value: 30°C (Max.) at current 0.5A

8. Environmental performance

Item	Description	Test method & Condition	Requirement
8-1	Damp heat, steady	Subject specimens to 90-95% RH at 60±2°C for 500 hours.	No damage. Insulation resistance: 50 MΩ (Min.) Voltage proof 250V r.m.s 、1 minute. No breakdown. Contact resistance: 80 mΩ (Max.)
8-2	Damp heat, cyclic	Subject specimens to continuous 10 cycles of damp heat, cyclic test for 24 hours. The temperature were -10°C,25°C,and 65°C	
8-3	Rapid change of temperature	Subject specimens to continuous 100cycles between -55°C and +85°C for 30minutrs each.	
8-4	Dry heat	Subject specimens to 80°C for 500 hours.	
8-5	Cold	Subject specimens to -40°C for 500 hours.	

This document contains information that is proprietary to P-TWO INC., and should not be used without permission.

PDF-XChange Viewer Click to buy NOW! www.docu-track.com

PDF-XChange Viewer Click to buy NOW! www.docu-track.com

SPECIFICATION OF PRODUCT

8-6	Salt Spray	Connector shall be tested to compare with method 101 of MIL-STD-202 Temperature: 35±2°C Density: 5% in weight Duration: 48 hours	Contact resistance shall be less than 80 mΩ after the test.
8-7	Solderability	The end of post shall be dipped to compare with method 208 of MIL-STD-202. Soldering Temperature: 245±5°C Soldering time: 5±0.5 sec	More than 95% of the immersion shall be covered with solder
8-8	Soldering Heat Withstanding	It should be tested to compare with method 210 of MIL-STD-202. Soldering temperature: 260±5°C Duration time:5±0.5 sec. Consecutive 2 cycles	No physical damage
8-9	Corrosion, H_2S gas	H_2S gas density: 3ppm± 1ppm Temperature: 40°C Duration: 96 hours Humidity : 90%	Contact resistance: 80 mΩ(Max.)
8-10	Ammonia(NH_3) resistance	Ammonia density: Evaporating from 15% ~ 35% ammonia solvent of 400g. Temperature : 40℃ Duration: 72 hours Humidity : 75%	Contact resistance: 80 mΩ(Max.)

This document contains information that is proprietary to P-TWO INC., and should not be used without permission.

REFLOW CONDITION

Reflow Temperature Profile

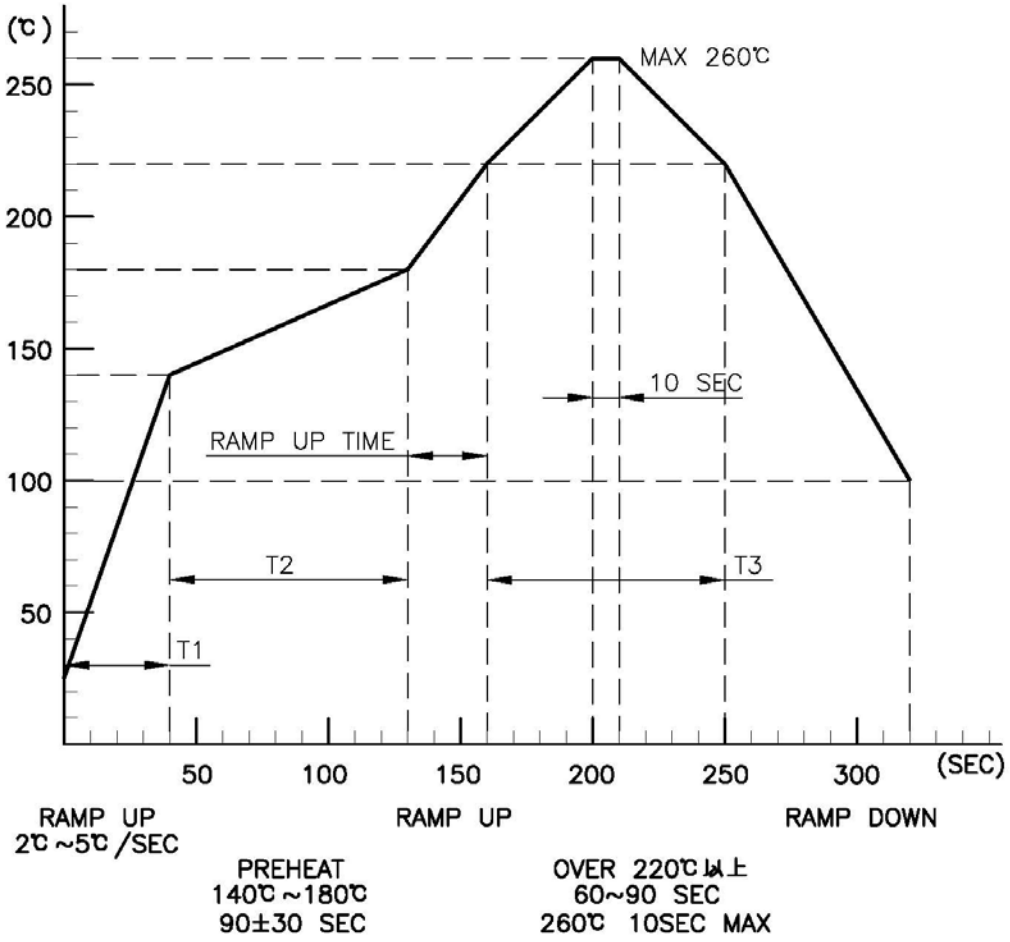

T1:	Temperature Ramp Up Rate	2℃~5℃/SEC
T2:	Preheat: 140℃~180℃	90±30 SEC
T3:	Time Over 220℃	60~90 SEC
T4:	Ramp Down Rate During Cooling	4℃~8℃/SEC
	Peak Temperature	260℃ Max

This document contains information that is proprietary to P-TWO INC., and should not be used without permission.

PDF-XChange Viewer Click to buy NOW! www.docu-track.com

PDF-XChange Viewer Click to buy NOW! www.docu-track.com

PRECAUTION FOR USE

1. About mating connectors：

1-1.The connector should be mated / unmated each other in parallel way.

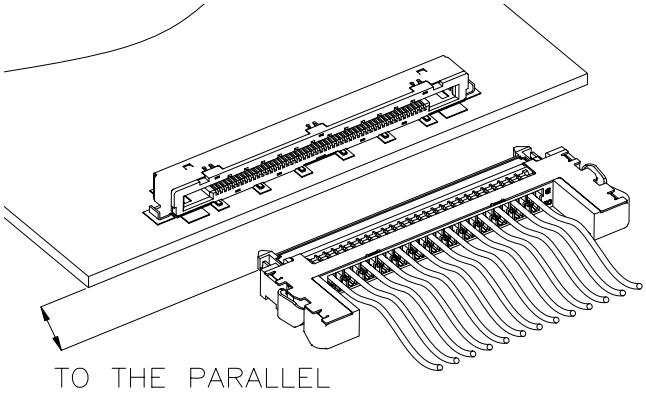

2. Mating:

2-1.Do not insert a connector to a counterpart connector if there is a gap (A) in the other side as they are being mated.

Confirm that the plug and the receptacle are guided to each other in parallel.

The plug should be inserted with 15˚(Max.) diagonally to the width direction.

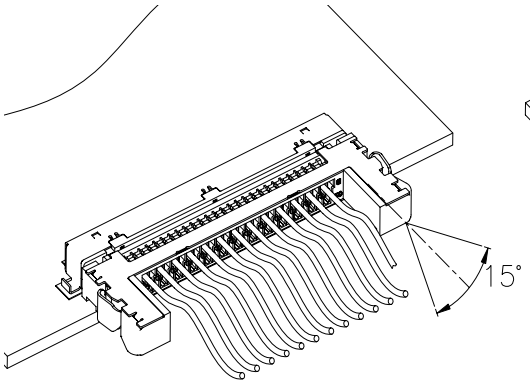

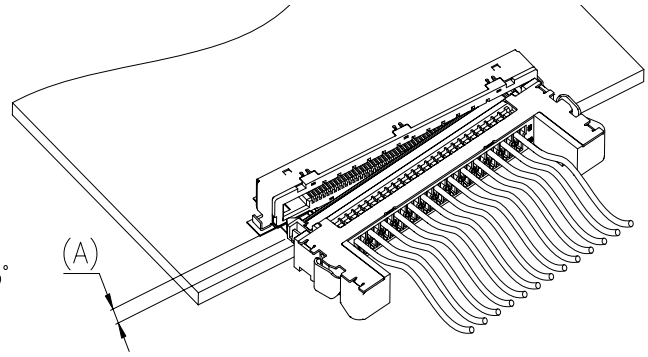

This document contains information that is proprietary to P-TWO INC., and should not be used without permission.

PDF-XChange Viewer Click to buy NOW! www.docu-track.com

PDF-XChange Viewer Click to buy NOW! www.docu-track.com

PRECAUTION FOR USE

3. unmating：

3-1.As shown in figure (1), pull out a cable side connector in parallel to a counterpart connector as pushing the lever.

Do not hold and turn neither sides of the cable to unmate the connectors as shown in the figure (2).

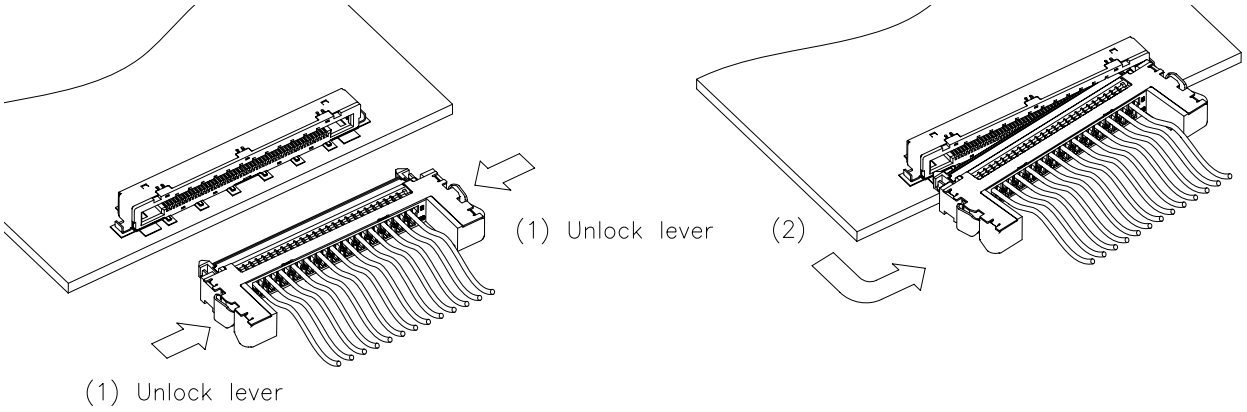

3-2.The plug should be pulled out with 15°(Max.) diagonally to the width direction.

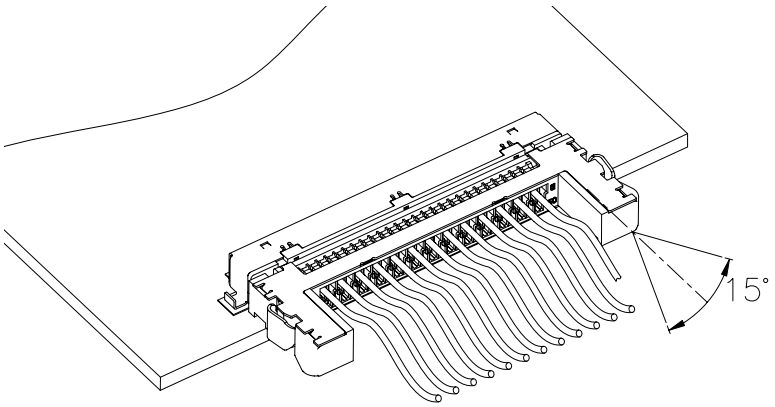

This document contains information that is proprietary to P-TWO INC., and should not be used without permission.

PDF-XChange Viewer Click to buy NOW! www.docu-track.com

PDF-XChange Viewer Click to buy NOW! www.docu-track.com

PRECAUTION FOR USE

3-3. Do not bend the base the printed circuit board in directions shown in the figure. (3)
(Do not pull a cable forcefully.)
Do not hold only a cable as it is pulled. It may affect to the locking strength.

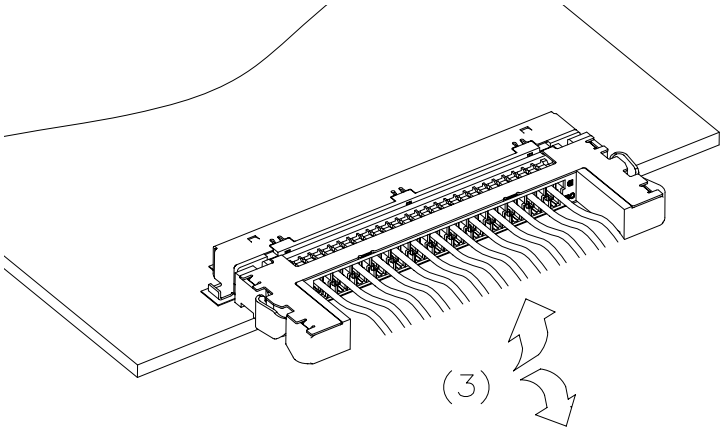

This document contains information that is proprietary to P-TWO INC., and should not be used without permission.

PDF-XChange Viewer Click to buy NOW! www.docu-track.com

PDF-XChange Viewer Click to buy NOW! www.docu-track.com

ORDERING INFORMATION

LVDS CONNECTOR SMT TYPE

Specifications:

- Part Name: LVDS 0.5 H3.75 Connector.
- Standard type (Board face mounting)
  SMT (Surface Mounted Technology) Type.
- No. of Contacts: 41 Pin

Part No:

1 8 7	0 6 0	–	4 1	2 2	1
(1)	(2)		(3)	(4)	(5)

(1) PRODUCT TYPE：
187：LVDS Connector.
(2) SERIAL NO.：
060：SERIAL NO.
(3) PIN NO.：
41：41 PIN
(4) PLATED：
22：5μ" Au Min. , 75μ" Min. Matte Tin(100%)(Lead Free)
overall 50μ" Min. Nickel.
(5) PACKAGE：
1：CARRIER

This document contains information that is proprietary to P-TWO INC., and should not be used without permission.

PDF-XChange Viewer Click to buy NOW! www.docu-track.com

PDF-XChange Viewer Click to buy NOW! www.docu-track.com

MATERIAL REFERENCE TABLE

Parts Name	General Name	Model No.	Heat Resistant Level	UL Card No.	Specific Weight
Terminal	Phosphor Bronze	C5210R-SH	-	-	0.075g / 7.4%
Ground	Stainless Steel	SUS304R-3/4H	-	-	0.04g / 4%
Shell	Stainless Steel	SUS304R-3/4H	-		0.45g / 44%
Lock Pin	Stainless Steel	SUS304R-3/4H			0.0172 g / 1.6%
Housing	LCP	E6807 LHF	UL94 - 0V	E54705	0. 42g / 42.4%

Total Weight: 1.002g

This document contains information that is proprietary to P-TWO INC., and should not be used without permission.

PDF-XChange Viewer Click to buy NOW! www.docu-track.com

P-TWO INDUSTRIES INC.

CONTACT MATERIAL CERTIFICATE OF SHELL

檢 查 證 明 書
INSPECTION CERTIFICATE

CHIAFAR.
嘉發實業工廠股份有限公司
CHIA FAR INDUSTRIAL FACTORY CO., LTD.
公 司:台北市太原路83號 TEL:02-25559090
日 期: 2008/1/14

客 戶 : Customer

材證編號 Certifica no : ASY-810307

規 範 Specification : JIS G4313

項 目 Item No.	產 品 名 稱 Description	產 品 尺 寸 Size	鋼 種 Type	板面 Finish	調質記號 Temper Symbol	數 量 Quantity	重 量(KG) Weight	鋼卷號碼 Coil No.	爐 碼 Heat No.	箱 號 C/No.
1	CSP	0.193 X 520.0 X C mm	SUS 304		1/2H	1	2188	CACYHG7CT1655	YU150123	
2	CSP	0.194 X 520.0 X C mm	SUS 304		1/2H	1	2118	CACYHG7CT1654	YU150123	
3	CSP	0.145 X 518.0 X C mm	SUS 304		1/2H	1	2152	CACYHG7CT2096	YU150092	
4	CSP	0.199 X 527.0 X C mm	SUS 304		1/2H	1	1934	CACYIP7CT1826	SE33432	
✓5	CSP	0.195 X 528.0 X C mm	SUS 304		3/4H	1	1894	CACYKP81T2153	SE33435	
6	CSP	0.194 X 528.0 X C mm	SUS 304		3/4H	1	1889	CACYLP81T2155	SE33432	
7	CSP	0.194 X 528.0 X C mm	SUS 304		3/4H	1	2006	CACYLP81T2156	SE33432	

項 目 Item No.	化學成份 (%) Chemical Composition C	Si	Mn	P	S	Ni	Cr	Mo	Cu	N	拉力試驗 Tensile Test 抗拉強度 TS N/mm²	降伏強度 YS (0.2%) N/mm²	伸長率 EL %	硬度試驗 Hardness Tset HRB	HV
Min						8.000	18.00								
Max	0.080	1.000	2.000	0.045	0.030	10.500	20.00								
1	0.042	0.450	1.340	0.031	0.007	8.040	18.14	0.160	0.260	0.032	851	624	32.5		275
2	0.042	0.450	1.340	0.031	0.007	8.040	18.14	0.160	0.260	0.032	851	624	32.5		275
3	0.044	0.520	1.180	0.033	0.005	8.000	18.10	0.280	0.370	0.022	879	653	30.5		280
4	0.060	0.444	1.056	0.029	0.002	8.060	18.14	0.180	0.450	0.039	901	671	29.2		291
5	0.058	0.423	1.071	0.028	0.003	8.070	18.15	0.160	0.401	0.040	933	738	26.2		310
6	0.060	0.444	1.056	0.029	0.002	8.060	18.14	0.180	0.450	0.039	966	792	24.8		315
7	0.060	0.444	1.056	0.029	0.002	8.060	18.14	0.180	0.450	0.039	966	792	24.8		315

註 記 Regulation	產 品 名 稱 Description	品管組長 QC Manager	檢驗員 Inspector
本產品符合GP&RoHS檢測規範 檢測編號 : CE/2006/C4481	CS :冷軋不鏽鋼帶 Cold Rolled Stainless Steel Strip CP :冷軋不鏽鋼片 Cold Rolled Stainless Steel Plate CSP:冷軋不鏽鋼(彈片)Cold Rolled Stainless Steel Strip For Spring HS :熱軋不鏽鋼帶 Hot Rolled Stainless Steel Strip HP :熱軋不鏽鋼片 Hot Rolled Stainless Steel Plate		

Part Name : LVDS 9 B TYPE
Doc. No. : JN87-01060
REV. : 01
Part N0. : 187060-41221
Issue Date : 2015.3.24
Page : 13 of 18

This document contains information that is proprietary to P-TWO INC., and should not be used without permission.

PDF-XChange Viewer Click to buy NOW! www.docu-track.com

PDF-XChange Viewer Click to buy NOW! www.docu-track.com

P-TWO INDUSTRIES INC.

PDF-XChange Viewer Click to buy NOW! www.docu-track.com

CONTACT MATERIAL CERTIFICATE OF TERMINAL

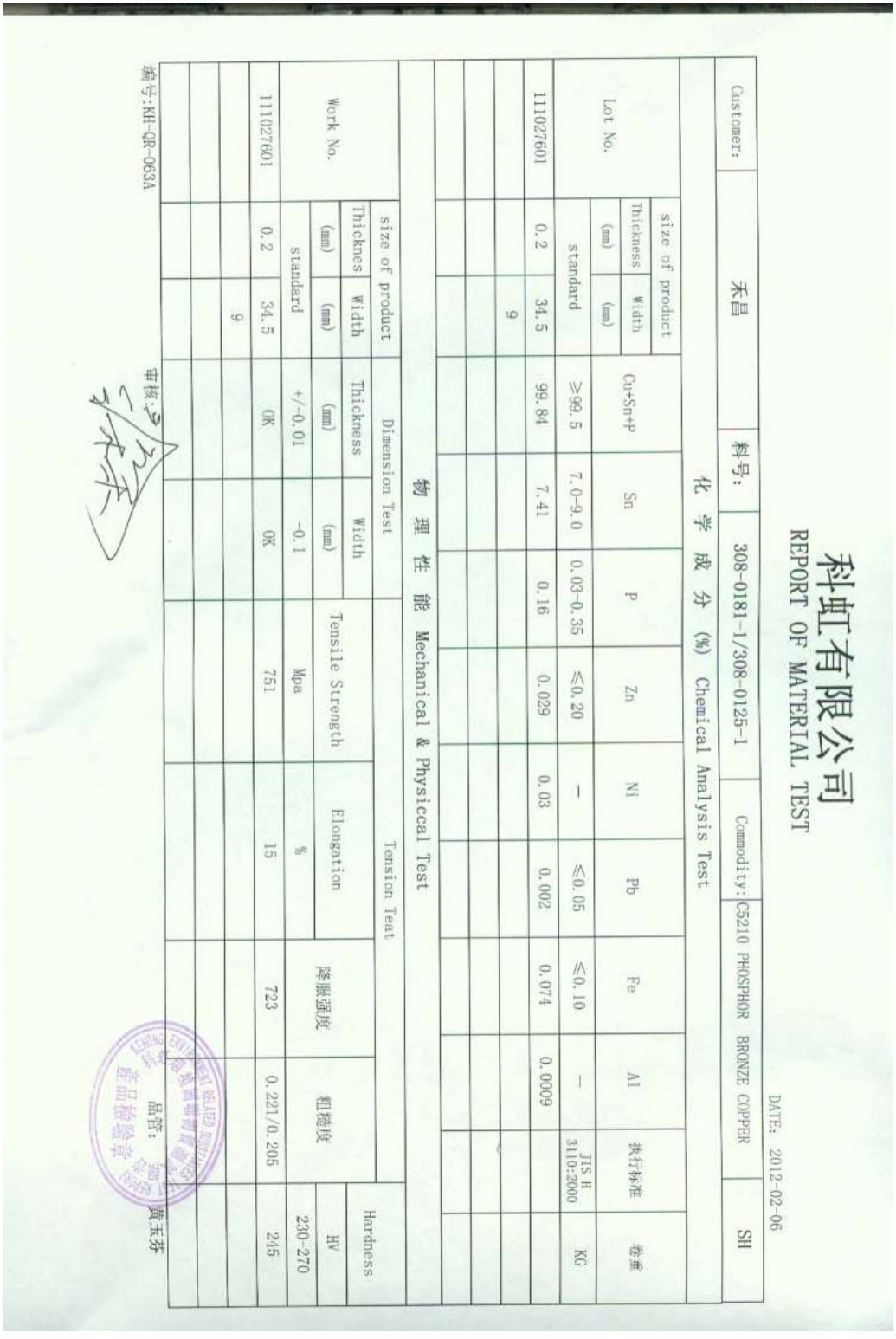

科虹有限公司
REPORT OF MATERIAL TEST

Customer: 禾昌 | 料号: 308-0181-1/308-0125-1 | Commodity: C5210 PHOSPHOR BRONZE COPPER | DATE: 2012-02-06

化 学 成 分 (%) Chemical Analysis Test

Lot No.	size of product Thickness (mm)	size of product Width (mm)	Cu+Sn+P	Sn	P	Zn	Ni	Pb	Fe	Al	执行标准	卷重
	standard		≥99.5	7.0-9.0	0.03-0.35	≤0.20	—	≤0.05	≤0.10	—	JIS H 3110:2000	KG
111027601	0.2	34.5	99.84	7.41	0.16	0.029	0.03	0.002	0.074	0.0009		
	9											

物 理 性 能 Mechanical & Physiccal Test

Work No.	size of product Thickness (mm)	size of product Width (mm)	Dimension Test Thickness (mm)	Dimension Test Width (mm)	Tension Test Tensile Strength Mpa	Tension Test Elongation %	降振强度	粗糙度	Hardness HV
	standard		+/-0.01	-0.1					230-270
111027601	0.2	34.5	OK	OK	751	15	723	0.221/0.205	245
	9								

编号:KH-QR-063A

审核: 品管: 黄玉芬

Part Name : LVDS 9 B TYPE	Doc. No. : JN87-01060	REV. : 01
Part N0. : 187060-41221	Issue Date : 2015.3.24	Page : 14 of 18

This document contains information that is proprietary to P-TWO INC., and should not be used without permission.

PDF-XChange Viewer Click to buy NOW! www.docu-track.com

P-TWO INDUSTRIES INC.

CONTACT MATERIAL CERTIFICATE OF GROUND

檢 查 證 明 書
INSPECTION CERTIFICATE

CHIAFAR.
嘉發實業工廠股份有限公司
CHIA FAR INDUSTRIAL FACTORY CO., LTD.
公 司:台北市太原路83號 TEL:02-25559090
日 期: 2008/1/14

客 戶 Customer :

材證編號 Certifica no : ASY-810307

規 範 Specification : JIS G4313

項目 Item No.	產品名稱 Description	產品尺寸 Size	鋼種 Type	板面 Finish	調質記號 Temper Symbol	數量 Quantity	重量(KG) Weight	鋼卷號碼 Coil No.	爐碼 Heat No.	箱號 C/No.
1	CSP	0.193 X 520.0 X C mm	SUS 304		1/2H	1	2188	CACYHG7CT1655	YU150123	
2	CSP	0.194 X 520.0 X C mm	SUS 304		1/2H	1	2118	CACYHG7CT1654	YU150123	
3	CSP	0.145 X 518.0 X C mm	SUS 304		1/2H	1	2152	CACYHG7CT2096	YU150092	
4	CSP	0.199 X 527.0 X C mm	SUS 304		1/2H	1	1934	CACYIP7CT1826	SE33432	
√5	CSP	0.195 X 528.0 X C mm	SUS 304		3/4H	1	1894	CACYKP81T2153	SE33435	
6	CSP	0.194 X 528.0 X C mm	SUS 304		3/4H	1	1889	CACYLP81T2155	SE33432	
7	CSP	0.194 X 528.0 X C mm	SUS 304		3/4H	1	2006	CACYLP81T2156	SE33432	

項目 Item No.	化學成份 (%) Chemical Composition C	Si	Mn	P	S	Ni	Cr	Mo	Cu	N	拉力試驗 Tensile Test 抗拉強度 TS N/mm²	降伏強度 YS (0.2%) N/mm²	伸長率 EL %	硬度試驗 Hardness Tset HRB	HV
Min						8.000	18.00								
Max	0.080	1.000	2.000	0.045	0.030	10.500	20.00								
1	0.042	0.450	1.340	0.031	0.007	8.040	18.14	0.160	0.260	0.032	851	624	32.5		275
2	0.042	0.450	1.340	0.031	0.007	8.040	18.14	0.160	0.260	0.032	851	624	32.5		275
3	0.044	0.520	1.180	0.033	0.005	8.000	18.10	0.280	0.370	0.022	879	653	30.5		280
4	0.060	0.444	1.056	0.029	0.002	8.060	18.14	0.180	0.450	0.039	901	671	29.2		291
5	0.058	0.423	1.071	0.028	0.003	8.070	18.15	0.160	0.401	0.040	933	738	26.2		310
6	0.060	0.444	1.056	0.029	0.002	8.060	18.14	0.180	0.450	0.039	966	792	24.8		315
7	0.060	0.444	1.056	0.029	0.002	8.060	18.14	0.180	0.450	0.039	966	792	24.8		315

註記 Regulation	產品名稱 Description	品管組長 QC Manager	檢驗員 Inspector
本產品符合GP&RoHS檢測規範 檢測編號 : CE/2006/C4481	CS :冷軋不鏽鋼帶 Cold Rolled Stainless Steel Strip CP :冷軋不鏽鋼片 Cold Rolled Stainless Steel Plate CSP:冷軋不鏽鋼(彈片)Cold Rolled Stainless Steel Strip For Spring HS :熱軋不鏽鋼帶 Hot Rolled Stainless Steel Strip HP :熱軋不鏽鋼片 Hot Rolled Stainless Steel Plate		

Part Name : LVDS 9 B TYPE	Doc. No. : JN87-01060	REV. : 01	
Part N0. : 187060-41221	Issue Date : 2015.3.24	Page : 15 of 18	

This document contains information that is proprietary to P-TWO INC., and should not be used without permission.

PDF-XChange Viewer Click to buy NOW! www.docu-track.com

PDF-XChange Viewer Click to buy NOW! www.docu-track.com

P-TWO INDUSTRIES INC.

CONTACT MATERIAL CERTIFICATE OF LOCK PIN

檢 查 證 明 書
INSPECTION CERTIFICATE

CHIAFAR.
嘉發實業工廠股份有限公司
CHIA FAR INDUSTRIAL FACTORY CO., LTD.
公 司:台北市太原路83號 TEL:02-25559090
日 期: 2008/1/14

客 戶 Customer :

材證編號 Certifica no : ASY-810307

規 範 Specification : JIS G4313

項目 Item No.	產品名稱 Description	產品尺寸 Size	鋼種 Type	板面 Finish	調質記號 Temper Symbol	數量 Quantity	重量(KG) Weight	鋼卷號碼 Coil No.	爐碼 Heat No.	箱號 C/No.
1	CSP	0.193 X 520.0 X C mm	SUS 304		1/2H	1	2188	CACYHG7CT1655	YU150123	
2	CSP	0.194 X 520.0 X C mm	SUS 304		1/2H	1	2118	CACYHG7CT1654	YU150123	
3	CSP	0.145 X 518.0 X C mm	SUS 304		1/2H	1	2152	CACYHG7CT2096	YU150092	
4	CSP	0.199 X 527.0 X C mm	SUS 304		1/2H	1	1934	CACYIP7CT1826	SE33432	
√5	CSP	0.195 X 528.0 X C mm	SUS 304		3/4H	1	1894	CACYKP81T2153	SE33435	
6	CSP	0.194 X 528.0 X C mm	SUS 304		3/4H	1	1889	CACYLP81T2155	SE33432	
7	CSP	0.194 X 528.0 X C mm	SUS 304		3/4H	1	2006	CACYLP81T2156	SE33432	

項目 Item No.	化學成份 (%) Chemical Composition C	Si	Mn	P	S	Ni	Cr	Mo	Cu	N	拉力試驗 Tensile Test 抗拉強度 TS N/mm²	降伏強度 YS (0.2%) N/mm²	伸長率 EL %	硬度試驗 Hardness Tset HRB	HV
Min						8.000	18.00								
Max	0.080	1.000	2.000	0.045	0.030	10.500	20.00								
1	0.042	0.450	1.340	0.031	0.007	8.040	18.14	0.160	0.260	0.032	851	624	32.5		275
2	0.042	0.450	1.340	0.031	0.007	8.040	18.14	0.160	0.260	0.032	851	624	32.5		275
3	0.044	0.520	1.180	0.033	0.005	8.000	18.10	0.280	0.370	0.022	879	653	30.5		280
4	0.060	0.444	1.056	0.029	0.002	8.060	18.14	0.180	0.450	0.039	901	671	29.2		291
5	0.058	0.423	1.071	0.028	0.003	8.070	18.15	0.160	0.401	0.040	933	738	26.2		310
6	0.060	0.444	1.056	0.029	0.002	8.060	18.14	0.180	0.450	0.039	966	792	24.8		315
7	0.060	0.444	1.056	0.029	0.002	8.060	18.14	0.180	0.450	0.039	966	792	24.8		315

註記 Regulation	產品名稱 Description	品管組長 QC Manager	檢驗員 Inspector
本產品符合GP&RoHS檢測規範 檢測編號 : CE/2006/C4481	CS :冷軋不鏽鋼帶 Cold Rolled Stainless Steel Strip CP :冷軋不鏽鋼片 Cold Rolled Stainless Steel Plate CSP:冷軋不鏽鋼(彈片)Cold Rolled Stainless Steel Strip For Spring HS :熱軋不鏽鋼帶 Hot Rolled Stainless Steel Strip HP :熱軋不鏽鋼片 Hot Rolled Stainless Steel Plate	[signature]	[signature]

Part Name : LVDS 9 B TYPE	Doc. No. : JN87-01060	REV. : 01	
Part N0. : 187060-41221	Issue Date : 2015.3.24	Page : 16 of 18	

This document contains information that is proprietary to P-TWO INC., and should not be used without permission.

PDF-XChange Viewer Click to buy NOW! www.docu-track.com

PDF-XChange Viewer Click to buy NOW! www.docu-track.com

P-TWO INDUSTRIES INC.

PLASTIC MATERIAL CERTIFICATE OF HOUSING

Item	E6008	E6006L	E6810	*E6807LHF	*E7008	*E7006L
Filler	Glass fiber	Glass fiber	Glass fiber/inorganic	Glass fiber/inorganic	Glass fiber	Glass fiber
Standard molding temperature	350	350	350	340	320	320
Specific gravity	1.70	1.81	1.81	1.67	1.71	1.84
Water absorption coefficient	0.02	0.02	0.02	0.02	0.02	0.02
Mold shrinkage rate MD	0.18	0.19	0.22	0.11	0.17	0.14
TD	1.18	0.74	0.66	0.63	1.05	0.79
Tensile strength	147	164	126	134	127	133
	1500	1670	1280	1370	1300	1360
Elongation at break	5.2	5.0	4.3	4.5	4.2	4.5
Flexural strength 23℃	143	153	134	145	138	140
	1460	1560	1370	1480	1410	1430
200℃	33	34	34	29	24	21
	340	350	350	300	240	210
Flexural modulus 23℃	12300	11300	13500	12100	11300	11200
	125000	115000	138000	123000	115000	114000
200℃	4900	5100	6100	4500	3230	3140
	50000	52000	62000	46000	33000	32000
Izod impact strength						
6.4t notched	108	137	88		56	78
	11	14	9		6	8
6.4t unnotched	412	363	275	343	275	255
	42	37	28	35	28	26
Shear strength	51	55	50	53	49	48
	520	560	510	540	500	490
Poisson's ratio	0.46	0.45	0.39	0.41	0.42	0.45
Rockwell hardness	R103	R103	R103	R101	R107	R107
DTUL	279	284	284	270	242	242
Soldering resistance	300	300	300	295	275	275
Linear expansion coefficient MD	1.3	2.0	1.1	1.0	0.8	0.8
(50~150℃) TD	5.6	8.9	6.5	6.3	7.8	8.4
Limiting oxygen index	48	42	46	45	49	48
Flame retardancy	V-0	V-0	V-0	V-0	V-0	V-0
(thickness)	0.3mmt	0.3mmt	0.3mmt	0.28mmt	0.38mmt	0.38mmt
Thermal conductivity	0.52	0.53	0.66	0.56	0.56	0.55
	0.45	0.46	0.57	0.48	0.48	0.47
Dielectric constant (10^3Hz)	4.4	4.3	4.3	4.3	4.7	4.6
(10^6Hz)	3.9	3.7	3.9	3.8	4.1	3.9
Dielectric tangent (10^3Hz)	0.022	0.023	0.019	0.020	0.024	0.026
(10^6Hz)	0.032	0.034	0.028	0.030	0.030	0.032
Specific volume resistance	10^{15}	10^{15}	10^{15}	10^{15}	10^{15}	10^{15}
Arc resistance	130	130	130	180	125	125
Tracking resistance	125	115	165	150	155	155

*) not under the special export control for strategic materials by the Japanese government.

Part Name : LVDS 9 B TYPE	Doc. No. : JN87-01060	REV. : 01
Part N0. : 187060-41221	Issue Date : 2015.3.24	Page : 17 of 18

This document contains information that is proprietary to P-TWO INC., and should not be used without permission.

PDF-XChange Viewer Click to buy NOW! www.docu-track.com

P-TWO INDUSTRIES INC.

PDF-XChange Viewer Click to buy NOW! www.docu-track.com

PLASTIC MATERIAL CERTIFICATE OF HOUSING

QMFZ2 Component - Plastics | Friday, October 24, 2003 | E54705

SUMITOMO CHEMICAL CO LTD
5-33 KITAHAWA 4-CHOME CHUO-KU OSAKA 541-8550 JP

Material Designation: **E6807LHF(re)**

Product Description: Liquid Crystal Polymer (LCP), designated "SUMIKASUPER" furnished as pellets.

Color	Min. Thick. (mm)	Flame Class	HWI	HAI	RTI Elec	RTI Imp	RTI Str	IEC GWIT	IEC GWFI
ALL	0.30	V-0	-	-	130	130	130	-	-

CTI: - **IEC CTI** (V): - **HVTR:** - **D495:** - **IEC Ball Pressure** (°C): -

Dielectric Strength (kV/mm): - **Volume Resistivity** (10^Xohm-cm): - **Dimensional Stability**(%): -
ISO Tensile Strength (MPa): - **ISO Flexural Strength** (MPa): - **ISO Heat Deflection** (°C): -
ISO Tensile Impact (kJ/m^2): - **ISO Izod Impact** (kJ/m^2): - **ISO Charpy Impact** (kJ/m^2): -

(re) Virgin and regrind up to 50% by weight incl. have the same basic material characteristics.

Report Date: 10/18/2000 Underwriters Laboratories Inc®

UL94 small-scale test data does not pertain to building materials, furnishings and related contents. UL 94 small-scale test data is intended solely for determining the flammability of plastic materials used in components and parts of end-product devices and appliances, where the acceptability of the combination is determined by ULI.

This document contains information that is proprietary to P-TWO INC., and should not be used without permission.

PDF-XChange Viewer Click to buy NOW! www.docu-track.com

禾昌興業股份有限公司
P-TWO INDUSTRIES INC.

PDF-XChange Viewer Click to buy NOW! www.docu-track.com

品質/環安政策
QUALITY/ENVIRONMENTAL SAFETY POLICIES

1. 顧客滿意守法規.
   Satisfying customer & obeying the law and regulations.

2. 防汙減廢節能源.
   Protecting pollution, reducing waste & saving energy.

3. 全員參與勤改善.
   All the staff join in & improve frequently.

4. 以人為本保安全.
   Taking person as foundation & keep safety .

PDF-XChange Viewer Click to buy NOW! www.docu-track.com

禾昌興業股份有限公司
P-TWO INDUSTRIES INC.

禁用品質保證函

The Confirmation of Prohibited / Controlled Substances

我們保證我們的產品遵循下列內容：

We hereby confirm and assure that our products are in conformity of the following stipulations:

1、塑膠原料及零部件之塑膠部分，其鎘(Cadmium)含量必須低於 5 PPM，其鉛(Lead)含量必須低於 100 PPM，汞(Mercury)、六價鉻(Chromium VI)、聚溴聯苯(PBBs)及聚溴二苯醚(PBDEs)低於 1000 PPM。

Cadmium contained in raw material for plastics and plastic components must be less than 5ppm; Lead must be less than 100ppm. ; Mercury, Chromium VI, PBBs and PBDEs must be less than 1000ppm..

2、包裝材料(包括紙箱、輪盤、TUBE 管、PE 袋及標籤紙)其鎘(Cadmium)、鉛(Lead)、汞(Mercury)、六價鉻(Chromium VI)總含量必須低於 100 PPM。

The total content of Cadmium, Lead, Mercury and Chromium VI in packaging (including cartons, reels, PVC tubes, PE bags, INK and labels) must be less than 100ppm.

3、金屬材料(包括銅板、銅線及表面電鍍層)其鎘(Cadmium)含量必須低於 5 PPM，其汞(Mercury)、六價鉻(Chromium VI)及鉛(Lead) 含量必須低於 1000 PPM。

The content of Cadmium in metal material (including copper, copper wire and surface plating) must be less than 5ppm ; Mercury , Chromium VI, Lead must be less than 1000ppm.

4、凡我方交給客戶的所有我方之零件和包裝材料均依照上述規定，若有不符這份保證信則本公司將承擔所有發生的費用及法律責任.

All parts and packaging materials delivered to our customers must be in compliance with stipulations above. If failure to any part of this guarantee letter happens, our company is responsible for all incurred charge and legal issues.

5、本保證函所生一切訴訟，適用中華民國法律，雙方同意以台灣台北地方法院為專屬管轄法院。

This agreement shall be governed by, and construed with, the substantive the laws of the Republic of China. Any disputes under this agreement will be brought in the courts located in Taipei, Taiwan, R.O.C., and the parties hereby consent to the personal jurisdiction and venue of the court.

6、本保證函同時以中文及英文書寫，有任何疑義爭執產生時，以中文版本所載為準。

This agreement wrote by Chinese and English, if it has any dispute arise, it being understood that the Chinese version shall be controlling.

Company Name: P-TWO INDUSTRIES INC.
Representative: 陳財福
Address: NO.9, SHIN HWA RD, KWEI SHAN IND. PARK TAOYUAN, 330 TAIWAN.
Tel No.: +886-3-3769999
Fax No.: +886-3-3762222

PDF-XChange Viewer Click to buy NOW! www.docu-track.com

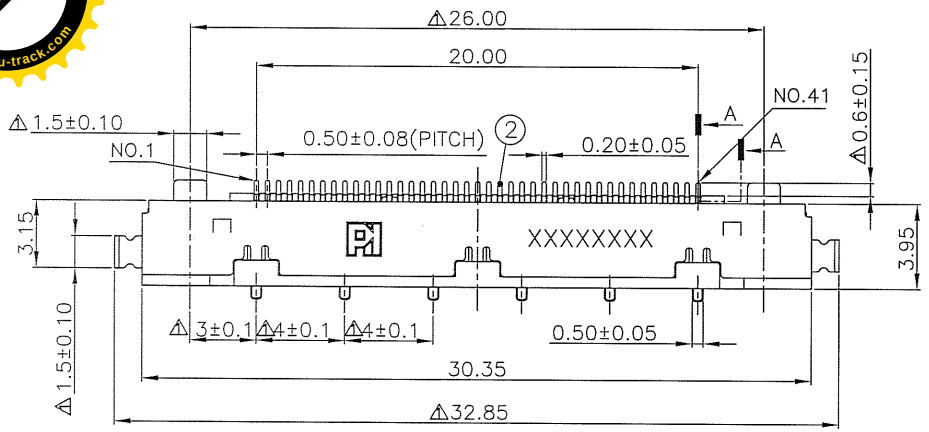

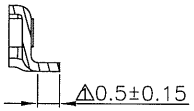

SECTION A–A
SCALE 8:1

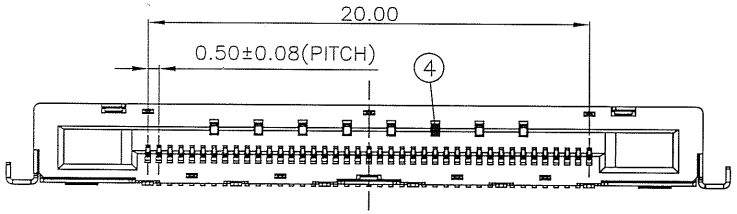

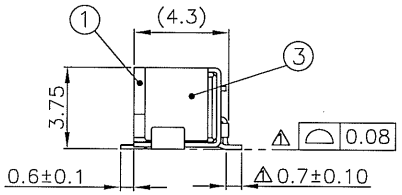

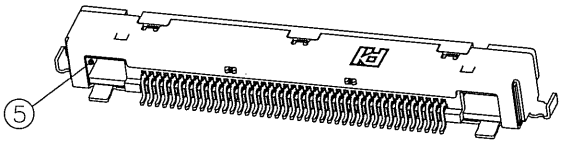

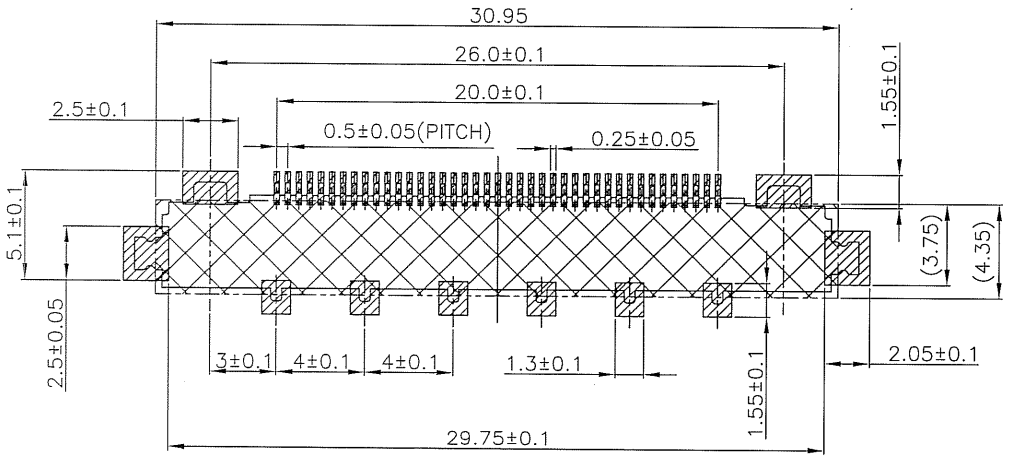

⚠APPLICABLE P.C.B. DIMENSION

NOTES: MATERIAL&FINISH

⚠1.HOUSINGLCP;COLOR:BLACK

2.TERMINAL:COPPER ALLOY.t=0.20mm
PLATING:CONTACT AREA 5u' Min. GOLD,
SOLDER AREA MATTE TIN (100%)75u" Min.(LEAD FREE)
OVERALL 50u'Min.NICKEL UNDER PLATED.

3.SHELL : STAINLESS STEEL,t=0.20mm
PLATING:MATTE TIN(100%)50u" Min.(LEAD FREE)
OVERALL 10u" Min.NICKEL UNDER PLATED.

4.GROUND : STAINLESS STEEL.t=0.20mm
PLATING:MATTE TIN(100%)50u" Min.(LEAD FREE)
OVERALL 10u" Min.NICKEL UNDER PLATED.

5.LOCK PIN : STAINLESS STEEL.t=0.20mm

6.PART NO:187060–41221
PACKAGED 1:CARRIER
PLATING
PIN NO.

7.DATE CODE: XXXXXXXX
PRODUCTION LINE
DATE
MONTH
YEAR
1:TAIWAN PRODUCTION
2:SHENZHEN PRODUCTION
3:SUZHOU PRODUCTION

ENGINEERING DEPARTMENT ISSUE 2008. 6. 26 P-TWO INDUSTRIES INC.

NO.	DESCRIPTION	Q'TY	⚠MATERIAL	⚠REMARKS
5	LOCK PIN	2	STAINLESS STEEL	NA
4	GROUND	2	STAINLESS STEEL	TIN PLATING
3	SHELL	1	STAINLESS STEEL	TIN PLATING
2	TERMINAL	41	COPPER ALLOY	CONTACT GOLD/SOLDERING TIN
1	HOUSING	1	LCP	COLOR:BLACK

CUSTOMER DRAWING

P-TWO INDUSTRIES INC.

SER	AREA	DESCRIPTION	CHK	DATE
⚠	3-J,2-H 3-G,6-E	NA080619	LEN	6/26,08

UNLESS OTHERWISE SPECIFIED TOLERANCES ARE
X.X ±0.25
X.XX ±0.15
X.XXX
ANG. ±0°30'

APPROVED BY DATE
CHECKED BY DATE
DRAWN BY DATE

TITLE: LVDS 9 B TYPE

DOCUMENT NO: JB87–01019

PAGE: 2

UNIT	SIZE	DRAWING NO	REV	SHEET	SCALE
mm	A3	187060–41221	B	1/1	4:1

PDF-XChange Viewer Click to buy NOW! www.docu-track.com

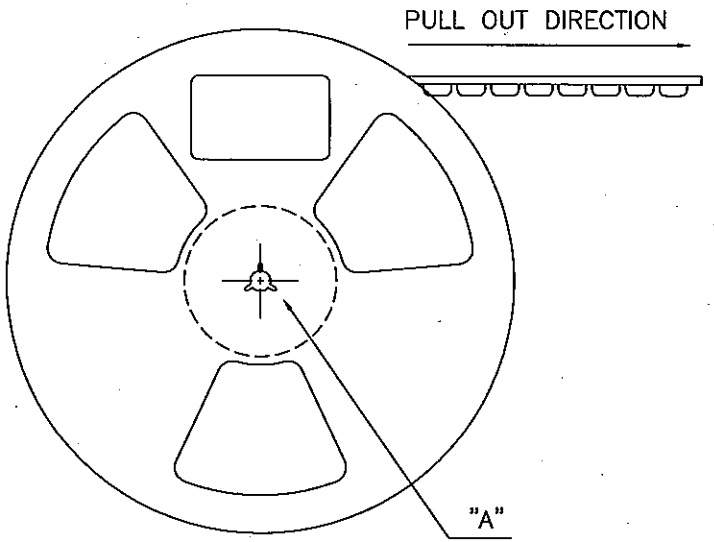

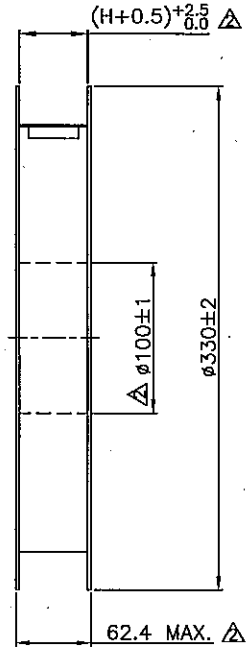

NOTES:

⚠ 1. FOR DETAIL OF CONNECTOR DIMENSIONS,PLEASE SEE THE DRAWING OF CONNECTOR ITSELF (NOT PACKAGED).
⚠ 2. CAMBER NOT TO EXCEED 1mm IN 100mm.
⚠ 3. LEAD TAPE LENGTH:400mm MIN.
⚠ 4." ⊠ "MARKING FOR CRITICAL DIMENSION
⚠ 5." □ "MARKING FOR MAJOR DIMENSION

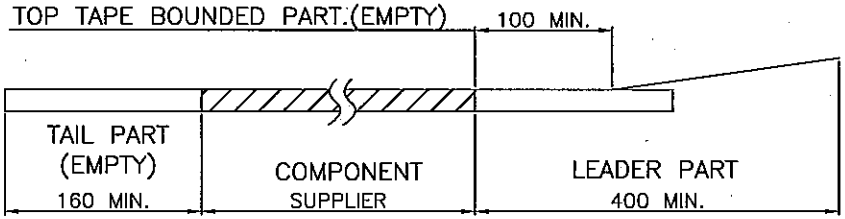

⚠ 4. PEELING OFF FORCE OF TOP TAPE:0.1N~1.3N(10gf~130gf)
(PEELING DIRECTION AS SHOWN IN FOLLOWING FIG.)
THIS REQUIREMENT SHOULD BE APPLIED AT SHIPMENT.
PEEL OFF SHOULD NOT BE ALLOWED,DURING TRANSPORTATION.

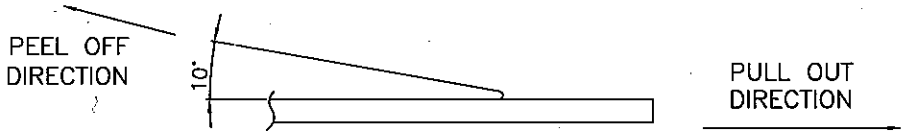

5. MATERIAL:
CARRIER TAPE:POLYSTYRENE
TOP TAPE:PET,PE,PEF
REEL:POLYSTYRENE(PS)<RECYCLE MATERIAL CONTAINED>

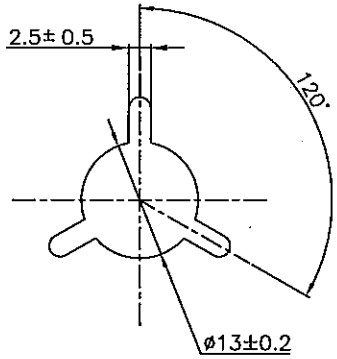

⚠ DETAIL "A"

ENGINEERING DEPARTMENT ISSUE 2011-06-01 P-TWO INDUSTRIES INC.

SER	AREA	DESCRIPTION	CHK	DATE
⚠	6-I	ECN:NB110560	GINO	5/31,11
⚠	5-I,6-I 5-C,6-F	ECN:NA101105	GINO	11/12,10
⚠	3-I,7-B	ECN:NB090322	GINO	3/20,09

UNLESS OTHERWISE SPECIFIED TOLERANCES ARE
X.X ±0.15
X.XX ±0.1
X.XXX
ANG. ±0°30'

APPROVED BY / DATE
CHECKED BY / DATE
DRAWN BY / DATE

P-TWO INDUSTRIES INC.

TITLE: LVDS 9 B TYPE CARRIER

UNIT	SIZE	DRAWING NO	REV	SHEET	SCALE
mm	A3	487006-56041	D	1/2	2:1

DOCUMENT NO: JB87-04024 PAGE: 1

PDF-XChange Viewer Click to buy NOW! www.docu-track.com

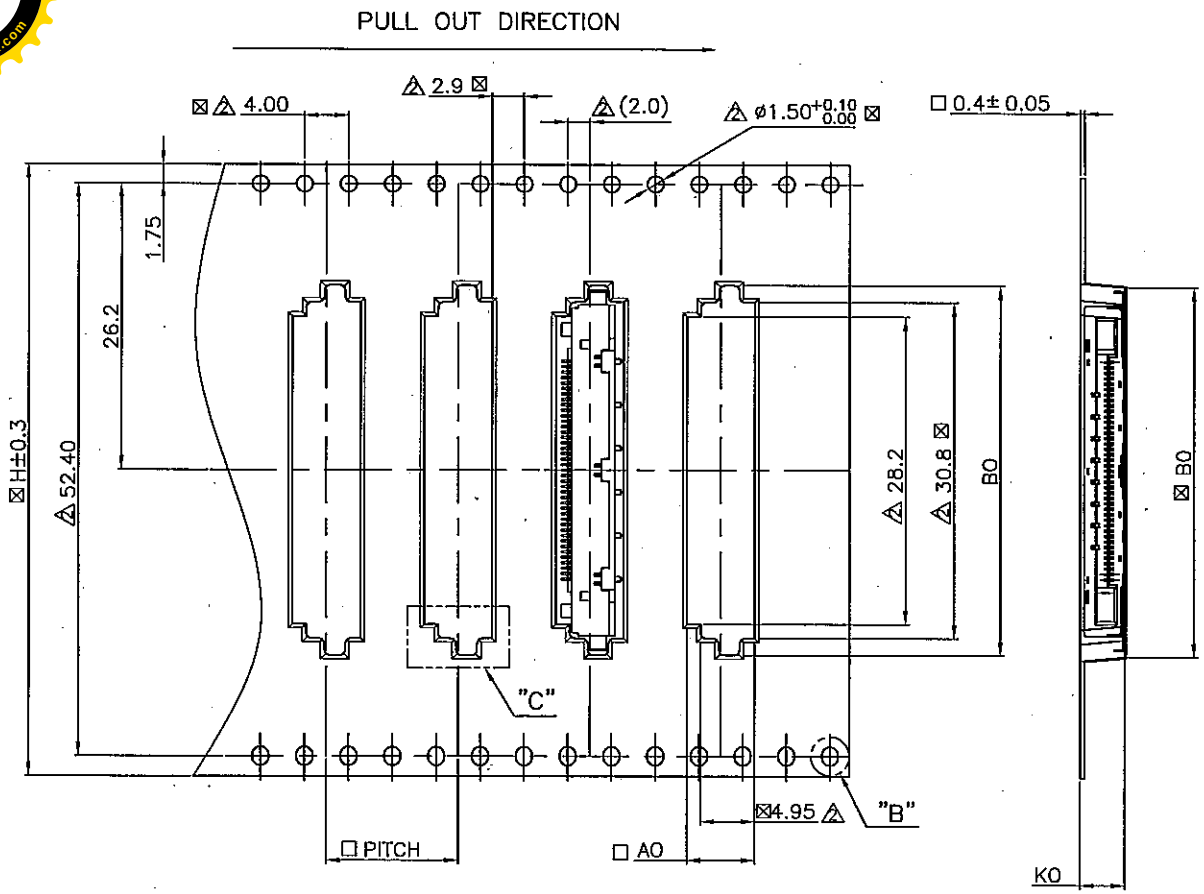

NOTES:

1. MATERIAL:POLYSTYRENE
2. Product+Carrier Tape Part Number:

487006–56041
- Pin NO.
- Package Size
- Serial No.
- Product Type
- Package Material

Carrier Length: 49 M (1250 PCS x 3 R)						PCS/REEL
ITEM	A0	B0	K0	H	PITCH	1250 PCS
DIM	6.2	33.9	4.1	56	12.00	

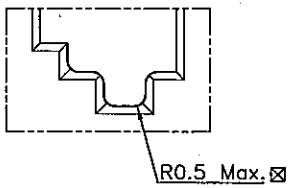

DETAIL "C"

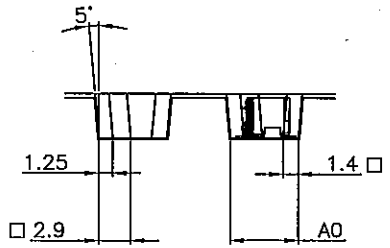

187019–41221
187060–41221
187125–41221
187135–41221
187148–41221

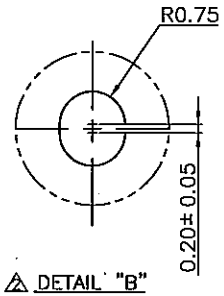

DETAIL "B"



SER	AREA	DESCRIPTION	CHK	DATE
3	3–A	ECN:NB110560	GINO	5/31,11
2	4–I,7–G 3–B,5–B	ECN:NA101105	GINO	11/12,10
1	3–I,7–B	ECN:NB090322	GINO	3/20,09

UNLESS OTHERWISE SPECIFIED TOLERANCES ARE
X.X ±0.15
X.XX ±0.1
X.XXX
ANG. ±0°30'

APPROVED BY DATE
CHECKED BY DATE
DRAWN BY DATE

P-TWO INDUSTRIES INC.

TITLE: LVDS 9 B TYPE CARRIER

DOCUMENT NO: JB87–04024 PAGE: 1

UNIT: mm SIZE: A3 DRAWING NO: 487006–56041 REV: D SHEET: 2/2 SCALE: 2:1

PDF-XChange Viewer Click to buy NOW! www.docu-track.com

達昌電子科技(蘇州)有限公司
P-TWO ELECTRIC TECHNOLOGY (SU ZHOU) CO., LTD.

檢驗類別	
	試機/模/產__
	進料____
	首件____
	自主____
	製程____
	入庫____
/	樣品____

客戶/廠商名稱	群創廠料
客戶/廠商料號	
出貨日期	

產品檢驗記錄表

料號	187060-4221-1	品名	LVDS	材質		檢驗日期	2014 年 11 月 25 日	單號	

項次	規格	時間/穴號/量具											
①	0.6±0.10	MS	0.692	0.690	0.694								
②	20.00±0.1	MS	20.034	24.004	20.029								
③	0.50±0.05	MS	0.495	0.495	0.495								
④	20.00±0.1	MS	20.009	20.003	19.995								
⑤	0.50±0.05	MS	0.499	0.484	0.499								
⑥	27.65±0.08	MS	27.632	27.641	27.638								
⑦	0.95±0.05	MS	0.961	0.984	0.956								
⑧	0.15±0.03	MS	0.155	0.102	0.102	NG							
⑨	0.65±0.12	MS	0.629	0.671	0.642								
⑩	⌓ 0.1	CO	0.014	0.029	0.043								
⑪	0.15±0.03	MS	0.194	0.198	0.218								
⑫	⌓ 0.08	CO	0.048	0.059	0.041								
	外觀	✓	OK										

外觀檢驗

項次	檢驗內容	缺點數	缺點類別 主缺	缺點類別 次缺

檢驗儀器 C:游標卡尺 MS:工具顯微鏡 M:分釐卡 CO:投影機 H:高度規 PH:推拉力器 X:X-RAY ET :導通測試 GA:自製量具 SP:錫爐 SP1:迴焊爐 EDX: 重金屬元素分析儀 V:目視

															判定		
批量(生產)數	PCS	尺寸	檢驗數	3 PCS	允收標準	CR MA	AC = 0 RE = 1	實查RE=	單位重量		包裝重量				允收	拒收	特採
		外觀	檢驗數	40 PCS	允收標準	CR MA	AC = 0 RE = 1	實查RE=	MI	AC= RE=	實查RE=					✓	
批量(出貨)數	PCS		檢驗數	PCS	允收標準	CR MA	AC = 0 RE = 1	實查RE=	MI	AC= RE=	實查RE=				允收	拒收	特採

備註:
(1) 外觀批量數參照 MIL-STD-1916 C=0(進料) C=0 (制程) C=0(OQC)一般檢驗"III"水準方式檢驗
(2) 非量測器之檢驗項目(如外觀)及治具檢驗項目，以OK或NG表示
(3) 相關功能性測試請參照檢驗規範
(4) 單位重量及包裝重量只適用於半成品
(5) 外觀檢驗項目請參照:
(6) 尺寸檢驗項目請參照：產品工程圖(圖紙)：文件編號:JB8)-00019 版本：B.
(7) 長度單位:mm

不良原因:

審核	檢驗者

PDF-XChange Viewer Click to buy NOW! www.docu-track.com

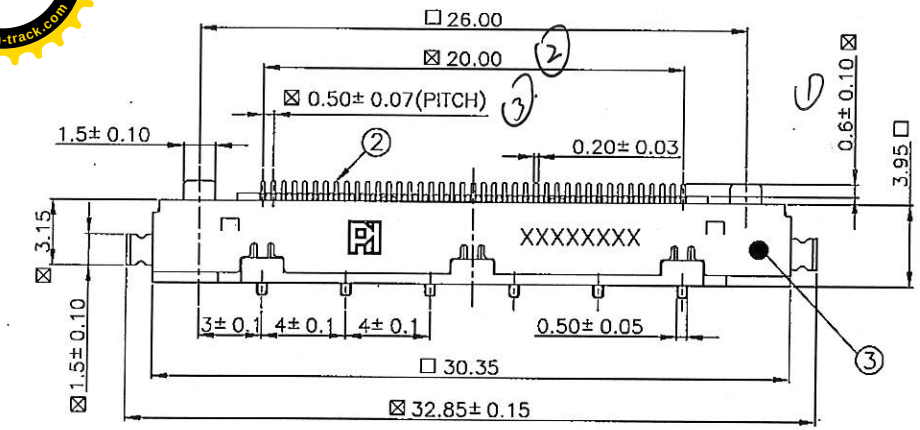

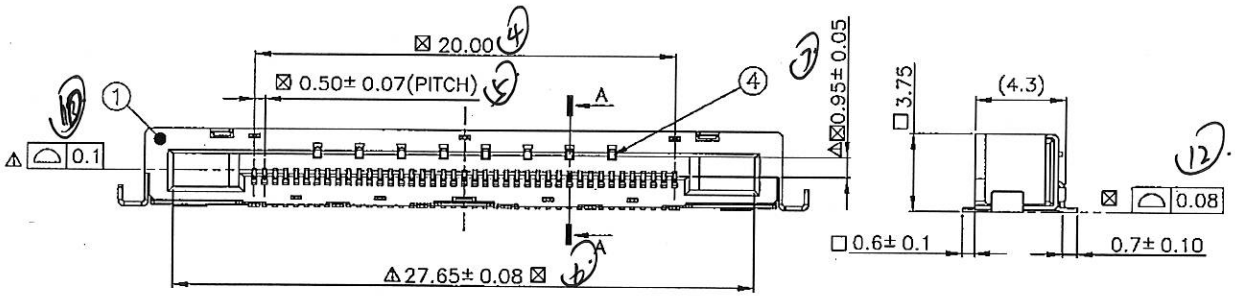

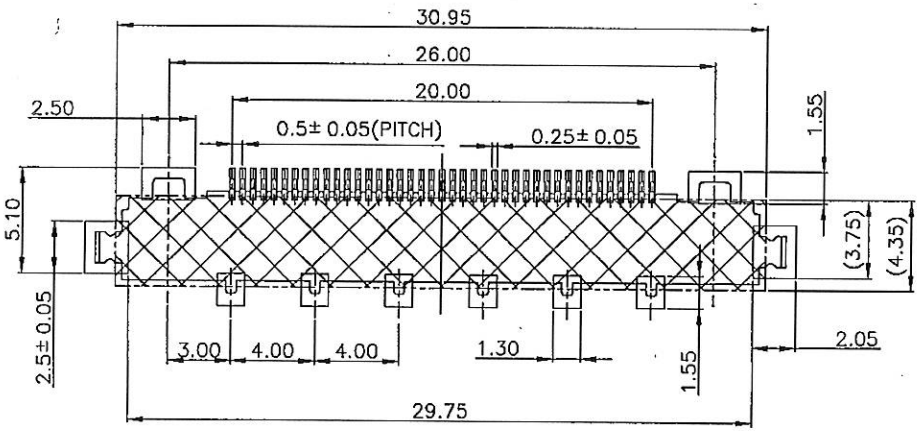

APPLICABLE P.C.B. DIMENSION

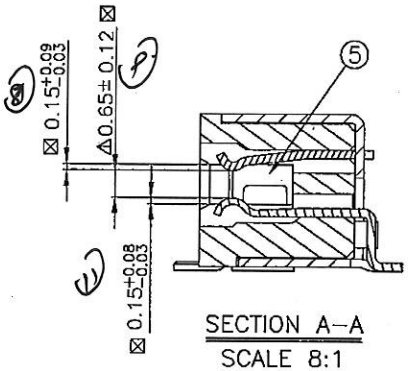

SECTION A–A
SCALE 8:1

ENGINEERING DEPARTMENT ISSUE 2011-09-02 P-TWO INDUSTRIES INC.

NOTES: MATERIAL&FINISH
1.HOUSING:HIGH THERMOPLASTIC;COLOR:BLACK
2.TERMINAL:COPPER ALLOY.t=0.2mm
PLATING:CONTACT AREA 5u" Min. GOLD,
SOLDER AREA MATTE TIN(100%)75~150u"(LEAD FREE),
OVERALL WITH 50~250u" NICKEL UNDER PLATED.
3.SHELL : STAINLESS STEEL,t=0.20mm
PLATING:MATTE TIN(100%)50~100u"(LEAD FREE)
OVERALL 10u~50u" NICKEL UNDER PLATED.
4.GROUND : STAINLESS STEEL,t=0.20mm
PLATING:MATTE TIN(100%)50~150u"(LEAD FREE)
OVERALL 10~50u" NICKEL UNDER PLATED.
5.LOCK PIN:STAINLESS STEEL ,t=0.20mm
6.PART NO:187060-4122X
PACKAGED — 1:CARRIER, 2:TUBE
PLATING
PIN NO.
7.DATE CODE: XXXXXXXX (鐳射雕刻)
PRODUCTION LINE
DATE
MONTH
YEAR
1:TAIWAN PRODUCTION
2:SHENZHEN PRODUCTION
3:SUZHOU PRODUCTION
△8." ⊠"MARKING FOR CRITICAL DIMENSION
△9." □"MARKING FOR MAJOR DIMENSION

NO.	DESCRIPTION	Q'TY	PARTS NUMBER
5	LOCK PIN	2	287018-060010
4	GROUND	2	287018-040210
3	SHELL	1	287019-050210
2	TERMINAL	41	287059-032208
1	HOUSING	1	287019-014103

P-TWO INDUSTRIES INC.

SER	AREA	DESCRIPTION	CHK	DATE
△		NA110812	GINO	09/02,11

UNLESS OTHERWISE SPECIFIED TOLERANCES ARE X.X ±0.15, X.XX ±0.1, X.XXX, ANG. ±0°30'
APPROVED BY DATE
CHECKED BY DATE
DRAWN BY DATE
TITLE: LVDS 9 B TYPE
DOCUMENT NO: JB87-00019
PAGE: 2
UNIT: mm
SIZE: A3
DRAWING NO: 187060-4122X
REV: B
SHEET: 1/1
SCALE: 4:1

PDF-XChange Viewer Click to buy NOW! www.docu-track.com
PDF-XChange Viewer Click to buy NOW! www.docu-track.com

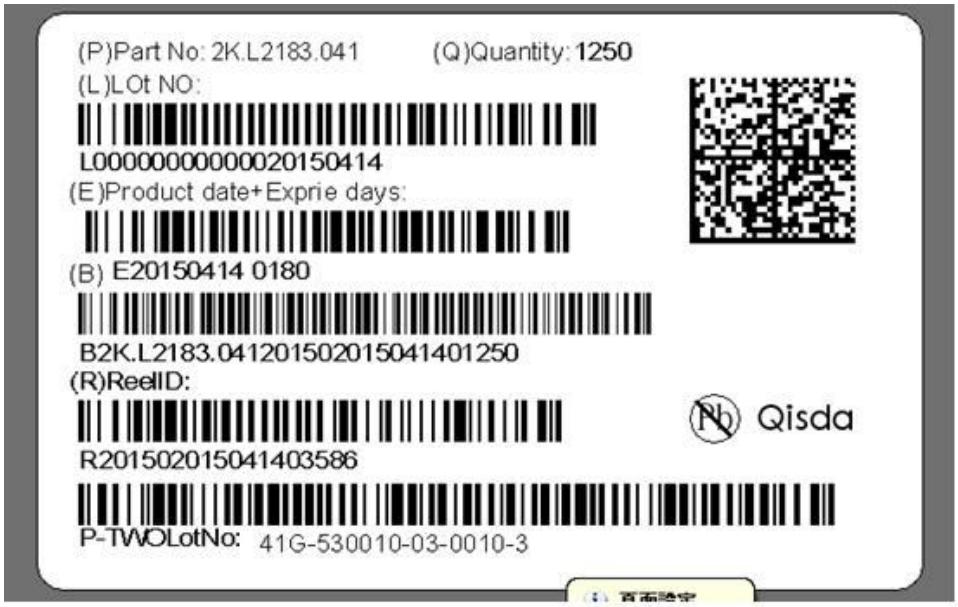

條碼分類	內容說明
P	客戶料號
Q	數量
L	廠商批次號
E	出貨日期加保質日期（天數）
B	客戶料號+廠商代碼+出貨日期+數量
R	廠商代碼+出貨日期+流水號
2 維碼	包含所有一維碼內容