乔讯电子（上海）有限公司
Chyao Shiunn Electronics(Shang Hai) Co.,Ltd.

Specification For Approval

Customer	**QISDA**
Part No.	**JS-1147V-02(M)CV-BK-NH**
Customer Part No.	**2K.D1138.102**
Description	**1.25mm Connector**
Samples	**5 PCS**

This Specification Is

Prepared By	Checked By	Approved By
lilian	Tang nian	Tang nian
Ini. Date	Rev. Date	Revision
2024/08/21	2024/08/21	A

Address: Unit B,1/F, Block 46,No,299,Fu Te Chung Road Waigaoqiao Free Trade Zone,ShangHai China

上海市外高桥保税区富特中路299号46号厂房

TEL: (86-21)-5046-1169,5046-1680 FAX:(86-21)5046-1063,5046-3014

E-mail:cssh@cssh.net.cn

REV	ECN.NO.	REVISIONS	REV.DRAWN	DATE
I	----	更正第一PIN位置	sunquan	11-04/28
J	----	修正料号编码	sunquan	11-12/01
K	----	增加2P,3P视图	sunquan	12-02/03
L	13041	加盖后高度统一为5.50mm	sunquan	13-11/05

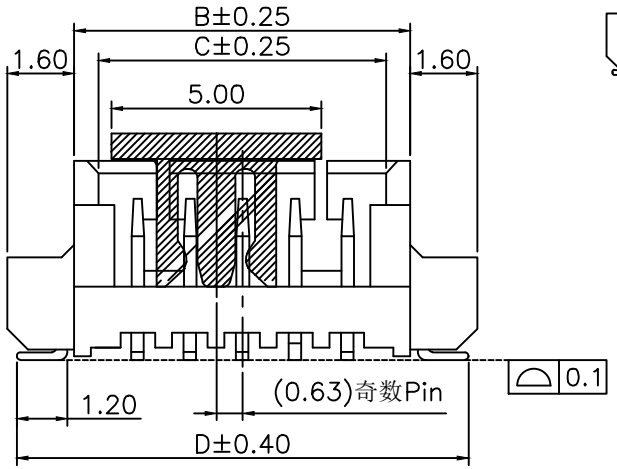

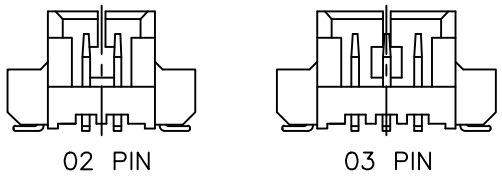

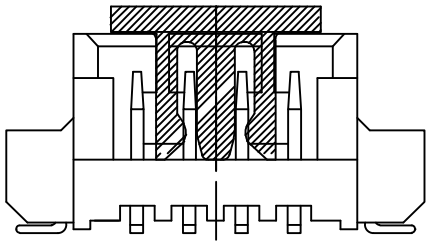

■ SPECIFICATIONS

- Voltage Rating: 250V AC/DC
- Current Rating: 1A, AC/DC
- Withstanding Voltage: 250V AC/minute
- Insulation Resistance:100MΩ min
- Temperature Range: −40°C~+85°C
- Contact Resistance: 20mΩ max

■ WAFER

- Part No.1: JS−1147V−XXXXXX−XX−XX
  - Poles: 02~15
  - Blank: Tin Plated
  - (M): Matte Sn
  - Blank: Non−cover
  - CV: CAP
  - NH: Halogen Free
  - Blank: Normal
  - Blank: Nature
  - BK: Black
- Part No.2: JS−1147V−XXXXXX−XX−XX
  - Poles: 02~15
  - Blank: Tin Plated
  - G0: Gold Plated
  - Blank: Non−cover
  - CV: CAP
  - NH: Halogen Free
  - Blank: Normal
  - Blank: Nature
  - BK: Black
- Material: Contact:Brass,Tin Plated/Matte sn
  Base:High Temp Plastic UL94V−0
- Q'ty: 1,000pcs./Tape & Reel
- Halogen free product identification LOGO on the packing

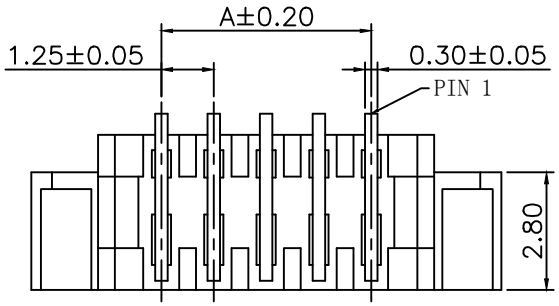

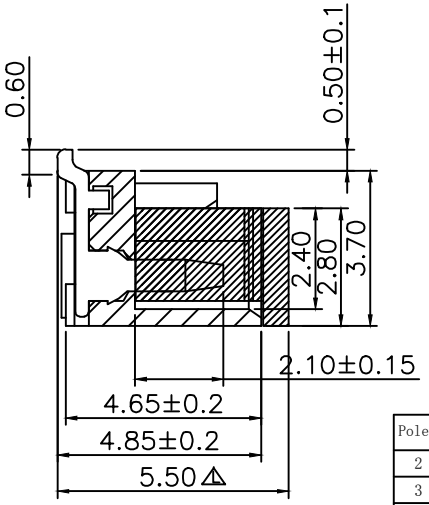

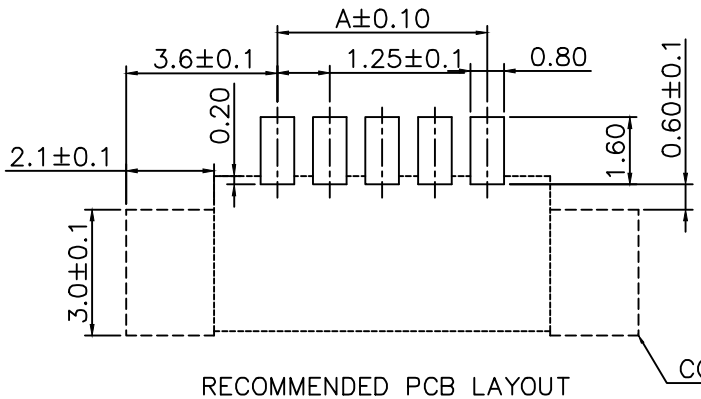

RECOMMENDED PCB LAYOUT

Poles	Dimension A	B	C	D	Poles	Dimension A	B	C	D
2	1.25	4.25	3.05	7.25	9	10.00	13.00	11.80	16.00
3	2.50	5.50	4.30	8.50	10	11.25	14.25	13.05	17.25
4	3.75	6.75	5.55	9.75	11	12.50	15.50	14.30	18.50
5	5.00	8.00	6.80	11.00	12	13.75	16.75	15.55	19.75
6	6.25	9.25	8.05	12.25	13	15.00	18.00	16.80	21.00
7	7.50	10.50	9.30	13.50	14	16.25	19.25	18.05	22.25
8	8.75	11.75	10.55	14.75	15	17.50	20.50	19.30	23.50

X.± 0.50	X.°± 5.0°	UNITS mm	NAME(INTENDED USE) CUSTOMER
.X± 0.30	.X°± 2.0°	MAT'L	
.XX± 0.20	.XX°± 1.0°	FINISH	PART NO.(INTENDED USE) JS−1147V−XX(M) XX
.XXX± 0.10	.XXX°± 0.5°		APPD:
		Q'TY	CHKD:
			DR: Asimo 2010−07−02

THESE DRAWINGS AND SPECIFICATIONS ARE THE PROPERTY OF CHYAO SHIUNN ELECTRONIC CO., LTD. AND SHALL NOT BE REPRODUCED. COPIED OR USED IN ANY MANNER WITHOUT THE PRIOR WRITTEN CONSENT OF CHYAO SHIUNN ELECTRONIC CO., LTD.

CHYAO SHIUNN ELECTRONIC (SHANGHAI) CO.,LTD.

TITLE: 1.25mm SMT TYPE

DWG NO.: 020−0052−1147V−XX

SCALE	SHEET	REV.
2:1	1/1	L

符 合 环 境 管 理 物 质

REV	ECN.NO.	REVISIONS	REV.DRAWN	DATE
A		初版发行	sunquan	2010/12/24
B		更改纸箱装盘数量	CaiQiang	2021.12.30

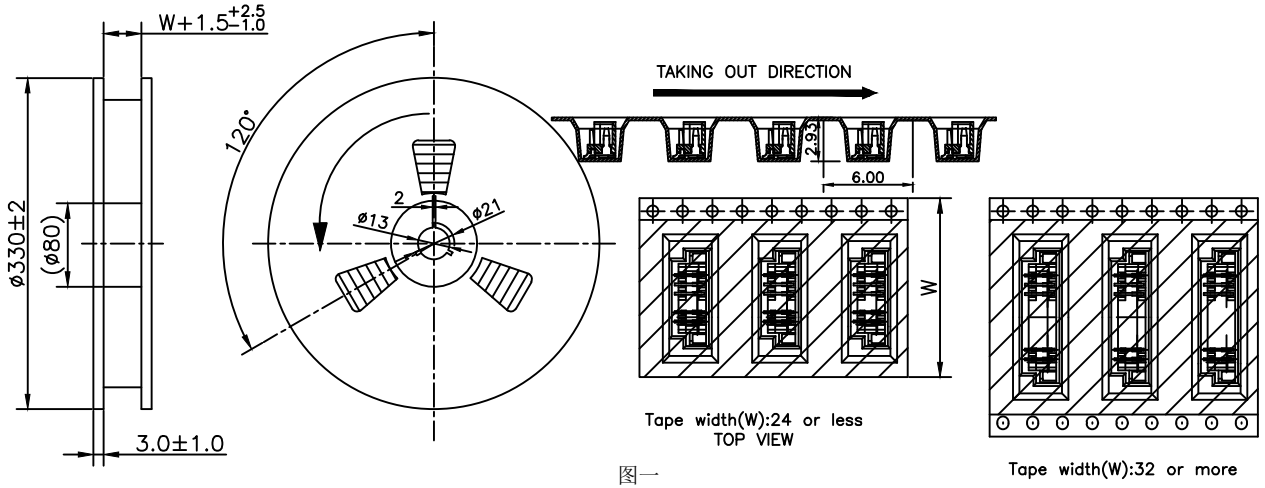

图一

包装方式:

1. 将CARRIER TAPE 送入包装机导轨中,并将COVER TAPE贴合在上面,其中初始15PCS不要放产品,然后将产品如图一所示方向依次放入CARRIER TAPE内,每个槽放1PC,每REEL共包装产品1000PCS,最后需留10PCS空槽不放产品,剪断CARRIER TAPE后，需将COVER TAPE留300mm再剪断COVER TAPE(如下示意图所示).
2. 每卷包完后，在REEL上贴好标签并用透明胶纸将如图四个地方封上。如客户要求贴条形码则贴上，如没有要求则不贴（如图二）。
3. 将包装好产品的REEL放入PE袋，放入两包干燥剂，挤压出PE袋内的空气后热封好(每盘都必须采用单独的热塑封包装)。（如图三）。
4. 将包好产品且塑封好的REEL放入外箱内，确认装箱数量无误后再用透明胶纸对外箱进行封口。外箱上也须贴上与REEL上相同的标签，但数量须改为此一箱的总数量（如图四）。

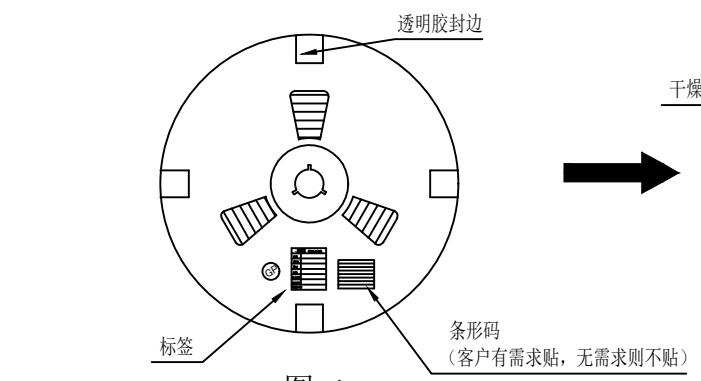

图二

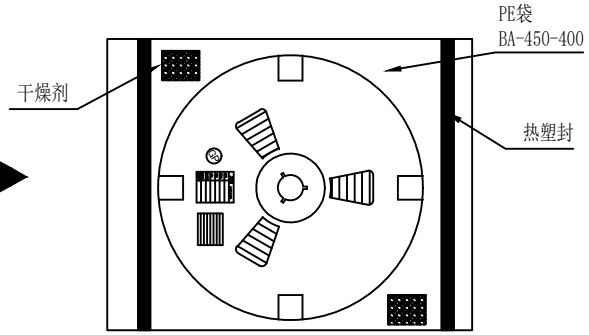

图三

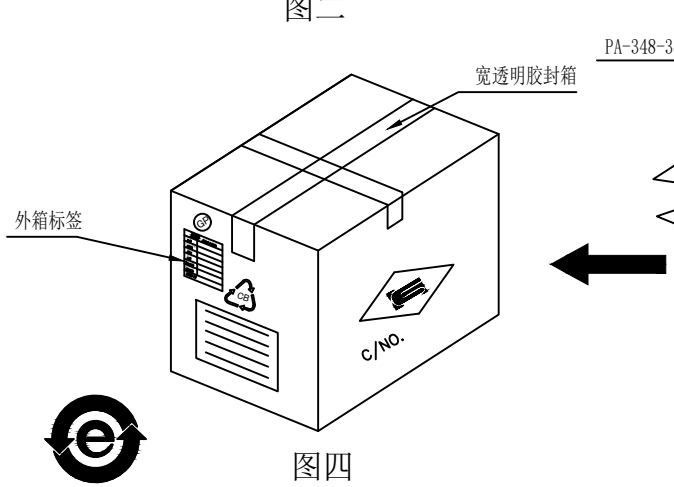

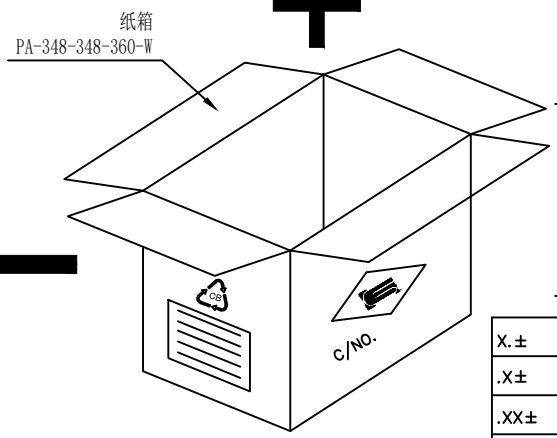

图四

载带宽度(mm)	装箱数量(盘)
16	13
24	10
32	8
44	6

LEADING TAPE LENGTH

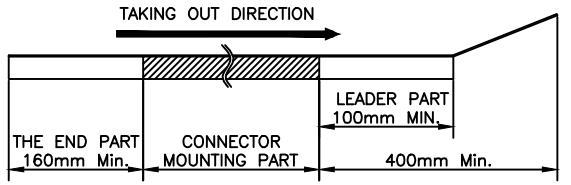

Peel strength of cover tape
Requirement:10gf~130gf
(Peeling speed:300mm/minute)

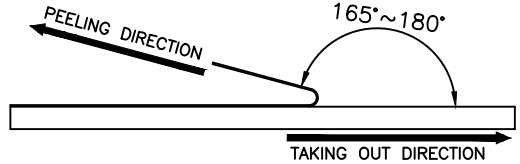

符 合 环 境 管 理 物 质

X.±	1.00	X.°±	10.°	UNITS	mm
.X±	0.50	.X°±	5.0°	MAT'L	
.XX±	0.20	.XX°±	2.0°	FINISH	
.XXX±	0.10	.XXX°±	1.0°	Q'TY	

THESE DRAWINGS AND SPECIFICATIONS ARE THE PROPERTY OF CHYAO SHIUNN ELECTRONIC CO., LTD. AND SHALL NOT BE REPRODUCED. COPIED OR USED IN ANY MANNER WITHOUT THE PRIOR WRITTEN CONSENT OF CHYAO SHIUNN ELECTRONIC CO., LTD.

NAME(INTENDED USE)	包装规范
PART NO.(INTENDED USE)	JS-1147V-XX
APPD:	
CHKD:	
DR:	sunquan 2010/12/24

CHYAO SHIUNN ELECTRONIC (SHANGHAI) CO.,LTD.

TITLE: 1147V PACKING

DWG NO.: JS-1147V-XX 包装图

SCALE	SHEET	REV.
N/A	1/1	/

喬訊電子工業股份有限公司
CHYAO SHIUNN ELECTRONIC INDUSTRIAL LTD.
7FL., NO.17, LANE 3, SEC.1 CHUNG CHENG EAST RD.,
TAMSHUI, TAIPEI, TAIWAN, R.O.C.
TEL: 886-2-2629-9955 (REP) FAX: 886-2-2626-6677
http://www.chyaoshiunn.com.tw E-mail:cs@chyaoshiunn.com.tw

Type Document	Product Specification	Revised /Edition	G
Date Issued	2003/09/01	Data Revised	2022/02/10
Subject: JS-1146-XX、JS-1146-TXX、JS-1147V-XX、JS-1147H-XX Pitch 1.25mm SMT Series Wire to Board Connector			Issued By: Engineering Dept.

This specification is referred to the 1.25 mm SMT series wire to board connector.

-INDEX-

1.0 Product Name/Part Number & Drawing Number. (产品名称 / 产品型号及图面型号)

2.0 Construction/Material & Surface Finish. (材质以及表面镀层)

3.0 Characteristic. (产品特性)

4.0 Specimen. (样本图标)

5.0 Applicable Standards. .(适用规范)

6.0 Mechanical Performance. (机械性能)

7.0 Electrical Performance. (电气性能)

8.0 Environmental Performance. (环境性能)

9.0 Insertion Force & Retention Force Requirement. (插入力和保持力要求)

10.0 Remark. (备注)

喬訊電子工業股份有限公司
CHYAO SHIUNN ELECTRONIC INDUSTRIAL LTD.
7FL., NO.17, LANE 3, SEC.1 CHUNG CHENG EAST RD.,
TAMSHUI, TAIPEI, TAIWAN, R.O.C.
TEL: 886-2-2629-9955 (REP) FAX: 886-2-2626-6677
http://www.chyaoshiunn.com.tw E-mail:cs@chyaoshiunn.com.tw

Type Document	Product Specification	Revised /Edition	G
Date Issued	2003/09/01	Data Revised	2022/02/10
Subject: JS-1146-XX、JS-1146-TXX、JS-1147V-XX、JS-1147H-XX Pitch 1.25mm SMT Series Wire to Board Connector			Issued By: Engineering Dept.

1.0 Product Name/Part Number & Drawing Number（产品名称 / 产品型号及图面型号）:

Product Name （产品名称）		Part Number （零件型号）	Drawing Number （图面型号）
Terminal （端子）		JS-1146-T	JS-1146-TXX
Housing		JS-1146	JS-1146-XX
Wafer	Straight （直立式）	JS-1147V	JS-1147V-XX
	Right Angle （卧式,）	JS-1147H	JS-1147H-XX

Note: (xx) The number of the circuits.

2.0 Construction/Material & Surface Finish（材质以及表面镀层）:

Construction and dimensions shall be in accordance with the referenced drawing.
Material and surface finish shall be specified as listing.

（结构和尺寸应符合参考图纸。材料和表面光洁度应按清单规定。）

Part Name （零件名称）			Material （材质）	Surface Finish （表面镀层）
Terminal （端子）			Phosphor Bronze	Tin/Gold-Plated （镀亮锡或镀金）
Housing			PA66	UL 94V-0
Wafer	Post		Brass	Tin-Plated/Matte sn （镀亮锡或镀雾锡）
	Base	JS-1147V	PA46/PA9T	UL 94V-0
		JS-1147H	PA46/PA9T	UL 94V-0

喬訊電子工業股份有限公司
CHYAO SHIUNN ELECTRONIC INDUSTRIAL LTD.
7FL., NO.17, LANE 3, SEC.1 CHUNG CHENG EAST RD.,
TAMSHUI, TAIPEI, TAIWAN, R.O.C.
TEL: 886-2-2629-9955 (REP) FAX: 886-2-2626-6677
http://www.chyaoshiunn.com.tw E-mail:cs@chyaoshiunn.com.tw

Type Document	Product Specification	Revised /Edition	G
Date Issued	2003/09/01	Data Revised	2022/02/10
Subject: JS-1146-XX、JS-1146-TXX、JS-1147V-XX、JS-1147H-XX Pitch 1.25mm SMT Series Wire to Board Connector			Issued By: Engineering Dept.

3.0 Characteristic（产品特性）：

Item (项目)		Standard （标准）	
3.1	Rated Current（额定电流）	1A AC/DC (With AWG #28 is applied)	
3.2	Rated Voltage（额定电压）	250V AC/DC	
3.3	Ambient Temperature Range （环境温度范围）	-40℃~~+85℃	
3.4	Applicable Wire （适用电线）	3.4.1	Conductor Construction Size（导线结构尺寸）: AWG #28~#32
		3.4.2	Wire Insulation O.D. （电线绝缘外径）:0.6mm~1.0mm
3.5	Applicable Printed Circuit Board Layout （ 适用印刷电路板布局）	3.5.1	SMT Layout: 1.25 ± 0.05 mm per Pitch
		3.5.2	SMT Layout: 1.6X0.8±0.05 mm for Pin Post
		3.5.3	SMT Layout: 3.0X2.1±0.05 mm for Ear Buckle

4.0 Specimen（样本图标）:

Part Name （零件名称）		Part Number （零件号）	Picture or Photograph （照片）
Contact		JS-1146-TXX	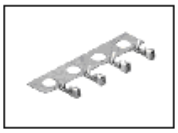
Housing		JS-1146-XX	
Wafer	Straight （直立式）	JS-1147V -XX	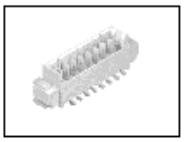
	Right Angle （卧式）	JS-1147H -XX	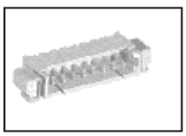

喬訊電子工業股份有限公司
CHYAO SHIUNN ELECTRONIC INDUSTRIAL LTD.
7FL., NO.17, LANE 3, SEC.1 CHUNG CHENG EAST RD.,
TAMSHUI, TAIPEI, TAIWAN, R.O.C.
TEL: 886-2-2629-9955 (REP) FAX: 886-2-2626-6677
http://www.chyaoshiunn.com.tw E-mail:cs@chyaoshiunn.com.tw

Type Document	Product Specification	Revised /Edition	G
Date Issued	2003/09/01	Data Revised	2022/02/10
Subject: JS-1146-XX、JS-1146-TXX、JS-1147V-XX、JS-1147H-XX Pitch 1.25mm SMT Series Wire to Board Connector			Issued By: Engineering Dept.

5.0 Applicable Standards (适用规范):

MIL-STD-202 Methods by test of connectors for electronic equipment.

（MIL-STD-202 电子设备连接器试验方法）

EIA 364 Testing method for electrical connectors.

（EIA-364 电连接器试验方法。）

6.0 Mechanical Performance (机械性能):

Item (项目)		Test Condition （测试条件）		Requirement （要求）
6.1	Insertion & Retention Force （插入力和保持力）	Insert and withdraw with connectors at the speed rate of 25±6 mm/minute. (EIA 364-13) （ 以 25±6 毫米/分钟的速度插入和取出 Housing）		Refer to paragraph 9.1 （参考第 9.1 段）
6.2	Crimp Tensile Strength （压接端子抗拉强度）	Pull out the cable from contact terminal at the speed rate of 25± 6 mm/minute. （以 25±6 mm/min 的速度从接触端子上拔出电缆）	AWG#28 size wire	1.0 kgf/Min.
			AWG#30 size wire	0.5 kgf/Min.
			AWG#32 size wire	0.3 kgf/Min.
6.3	Contact Retention Force (in Housing) （接触保持力）	Axial pullout force on the terminal in the housing at the speed rate of 25 ± 6 mm per minute. （以25±6 mm/min的速度施加在外壳端子上的轴向拔出力。）		Per Contact 0.5 kgf/Min.
6.4	Post Retention Force (in Base) （端子保持力）	Axial pullout force on the Post in the base at the speed rate of 25 ± 6 mm per minute. (EIA 364-29C) （以25±6 mm/min的速度施加在塑壳端子上的轴向拔出力。）		0.5 kgf/Min.

喬訊電子工業股份有限公司
CHYAO SHIUNN ELECTRONIC INDUSTRIAL LTD.
7FL., NO.17, LANE 3, SEC.1 CHUNG CHENG EAST RD.,
TAMSHUI, TAIPEI, TAIWAN, R.O.C.
TEL: 886-2-2629-9955 (REP) FAX: 886-2-2626-6677
http://www.chyaoshiunn.com.tw E-mail:cs@chyaoshiunn.com.tw

Type Document	Product Specification	Revised /Edition	G
Date Issued	2003/09/01	Data Revised	2022/02/10
Subject: JS-1146-XX、JS-1146-TXX、JS-1147V-XX、JS-1147H-XX Pitch 1.25mm SMT Series Wire to Board Connector			Issued By: Engineering Dept.

7.0 Electrical Performance（电气性能）:

Item (项目)		Test Condition （测试条件）	Requirement （要求）
7.1	Contact Resistance （接触阻抗）	A maximum voltage of 20mV and a maximum current of 10mA are applied to the Mate connectors. (EIA 364-23) （让其通过 10mA /20mV Max 电流）	Contact Resistance: 20 milliohms Max. （接触电阻：最大 20mΩ）
7.2	Current Continuity （电流连续性）	Each circuit of the connector shall be connected in series continuity meter shall detect current discontinuity longer than 1 microsecond during the vibration test. （连接器的每个电路应串联连接，连续性计应在振动试验期间检测超过1微秒的电流不连续性。）	No discontinuity current is longer than 1 microsecond. （回路瞬间断电不能超过1微秒）
7.3	Insulation Resistance （绝缘阻抗）	Apply 500V D/C to any two adjacent contacts to measure the insulation resistance. (EIA 364-21) （试验电压 500V D/C，施加于相邻两端，测量绝缘电阻）	Insulation Resistance: Initial 100 megohms Min. （绝缘电阻：初始 100 兆欧（最小值））
7.4	Withstanding Voltage （耐电压）	Apply 250V A/C (rms) for 1 minute and the leakage current shall not excced 0.5mA to the adjacent terminal and ground of the Mate connectors. (EIA 364-20) （施加 250V A/C（rms）1 分钟，泄漏电流不得超过 0.5mA 至配对连接器的相邻端子和接地。）	No breakdown or flashover. （无击穿或者火花）

喬訊電子工業股份有限公司
CHYAO SHIUNN ELECTRONIC INDUSTRIAL LTD.
7FL., NO.17, LANE 3, SEC.1 CHUNG CHENG EAST RD.,
TAMSHUI, TAIPEI, TAIWAN, R.O.C.
TEL: 886-2-2629-9955 (REP) FAX: 886-2-2626-6677
http://www.chyaoshiunn.com.tw E-mail:cs@chyaoshiunn.com.tw

Type Document	Product Specification	Revised /Edition	G
Date Issued	2003/09/01	Data Revised	2022/02/10
Subject: JS-1146-XX、JS-1146-TXX、JS-1147V-XX、JS-1147H-XX Pitch 1.25mm SMT Series Wire to Board Connector			Issued By: Engineering Dept.

8.0 Environmental Performance(环境性能):

Item (项目)		Test Condition （测试条件）	Requirement （要求）
8.1	Vibration （振动）	Frequency: 10~55~10 Hz/minute. Amplitude: 1.52 mm P-P. Direction: 1. Axis of up and down. 2. Axis of right the left. 3. Axis of front and back. Period: 2 hours for each direction. (EIA 364-28A-23) （频率：10 ~ 55 ~ 10 Hz /分钟。 振幅：1.5 毫米。 方向：1.上下轴。 2.从左到右的轴。 3.前后轴。 周期：每个方向 2 小时。）	(After the test) Contact Resistance: 40 milliohms Max. （振动后测试，接触阻抗：40 mΩ Max） (After the test) No discontinuity current is longer than 1 microsecond （振动后测试，回路瞬间断电不能超过 1 微秒）.
8.2	Humidity Steady State （湿度稳定状态）	Temperature: 40±2℃. Humidity: 90%~95% (RH). Period: 96 hours continuously. (EIA 364-31) （将样品置于恒定湿热箱 温度：40±2℃, 湿度：90%~~95%（相对湿度） 周期：连续 96 小时）	(After the test) Contact Resistance: 40 milliohms Max. （测试之后，最大接触阻抗 40 mΩ） (After the test) Insulation Resistance： 10 Megohms Min. （测试之后，最小绝缘阻10 MΩ） (After the test) Withstanding Voltage : No breakdown or flashover （测试之后，耐电压：无击穿或者火花）

喬訊電子工業股份有限公司
CHYAO SHIUNN ELECTRONIC INDUSTRIAL LTD.
7FL., NO.17, LANE 3, SEC.1 CHUNG CHENG EAST RD.,
TAMSHUI, TAIPEI, TAIWAN, R.O.C.
TEL: 886-2-2629-9955 (REP) FAX: 886-2-2626-6677
http://www.chyaoshiunn.com.tw E-mail:cs@chyaoshiunn.com.tw

Type Document	Product Specification	Revised /Edition	G
Date Issued	2003/09/01	Data Revised	2022/02/10
Subject: JS-1146-XX、JS-1146-TXX、JS-1147V-XX、JS-1147H-XX Pitch 1.25mm SMT Series Wire to Board Connector			Issued By: Engineering Dept.

Item (项目)		Test Condition （测试条件）	Requirement （要求）
8.3	Thermal Shock （冷热冲击）	One Cycle Consists Of: -55 +0/-3℃for 30 minutes. → Room Temp.5 minutes +105+3/-0℃ for 30 minutes. → Room Temp.5 minutes Total Cycles: 25 Cycles.(EIA 364-32) （一个循环包括： -55+0/-3℃30 分钟。→室温 5 分钟 +105+3/-0℃30 分钟。→室温 5 分钟 总周期：25 个周期。）	(After the test) Contact Resistance: 40 milliohms Max. （测试之后，最大接触阻抗 40 mΩ）
			(After the test) Insulation Resistance： 10 Megohms Min. （测试之后，最小绝缘阻10 MΩ）
			(After the test) Withstanding Voltage : No breakdown or flashover （测试之后，耐电压：无击穿或者火花）
8.4	Heat Aging （热老化）	Temperature: 85±2℃. Period: 96 hours continuously. (EIA 364-17) （温度：85±2℃。 周期：连续 96 小时。）	(After the test) Contact Resistance: 40 milliohms Max. （测试之后，接触电阻最大 40 mΩ）

喬訊電子工業股份有限公司
CHYAO SHIUNN ELECTRONIC INDUSTRIAL LTD.
7FL., NO.17, LANE 3, SEC.1 CHUNG CHENG EAST RD.,
TAMSHUI, TAIPEI, TAIWAN, R.O.C.
TEL: 886-2-2629-9955 (REP) FAX: 886-2-2626-6677
http://www.chyaoshiunn.com.tw E-mail:cs@chyaoshiunn.com.tw

Type Document	Product Specification	Revised /Edition	G
Date Issued	2003/09/01	Data Revised	2022/02/10
Subject: JS-1146-XX、JS-1146-TXX、JS-1147V-XX、JS-1147H-XX Pitch 1.25mm SMT Series Wire to Board Connector			Issued By: Engineering Dept.

Item (项目)		Test Condition （测试条件）	Requirement （要求）
8.5	Salt Spray （盐雾）	A mated connector shall be subjected to a Salt Spray test of the following conditions. After the test , the specimen shall be washed with running water and dried naturally before the measurement of contact resistance. Temperature: 35±2℃. Density: 5 % in weight. Period: Terminal or contact (Stamping after tin plated for 8 hours) ; Terminal or contact (Stamping before tin plated for 24 hours) (EIA 364-26) （以组合状态下连接器作为试验样品，依照随附如下规格要求，进行盐水喷雾试验，试验过后将样品用清水冲洗并经过自然风干，而后测量其接触接触阻抗 温度：35±2℃。 密度：重量的 5%。 时间：端子（先镀后冲，8小时）& 端子（先冲后镀，24 小时)）	(After the test) Contact Resistance: 40 milliohms Max （测试之后，接触电阻最大 40 mΩ）
8.6	Solder Ability （焊锡性）	Solder Temperature: 245 ± 5℃. Immersion Period: 3±0.5 Seconds Method : 0.5mm From terminal tip tip and fitting nail tip. (EIA 364-52) （焊接温度：245±5℃。 浸泡时间：3±0.5 秒 方法：距端子尖和耳扣尖 0.5 mm）	Solder entirely 95% of immersed area must show no voids or pinholes. （焊料浸没区域的 95%不得有空隙或针孔）

喬訊電子工業股份有限公司
CHYAO SHIUNN ELECTRONIC INDUSTRIAL LTD.
7FL., NO.17, LANE 3, SEC.1 CHUNG CHENG EAST RD.,
TAMSHUI, TAIPEI, TAIWAN, R.O.C.
TEL: 886-2-2629-9955 (REP) FAX: 886-2-2626-6677
http://www.chyaoshiunn.com.tw E-mail:cs@chyaoshiunn.com.tw

Type Document	Product Specification	Revised /Edition	G
Date Issued	2003/09/01	Data Revised	2022/02/10
Subject: JS-1146-XX、JS-1146-TXX、JS-1147V-XX、JS-1147H-XX Pitch 1.25mm SMT Series Wire to Board Connector			Issued By: Engineering Dept.

Item (项目)		Test Condition （测试条件）	Requirement （要求）
8.7	Resistance To Soldering Heat （焊锡耐热性）	Solder Temperature: 260 ± 5℃. Immersion Period : 3~5±0.5 Seconds (The part can suitable to pass the IR reflow) （焊接温度：260±5℃。 浸泡时间：3~5±0.5秒 （零件适合通过IR回流焊）） 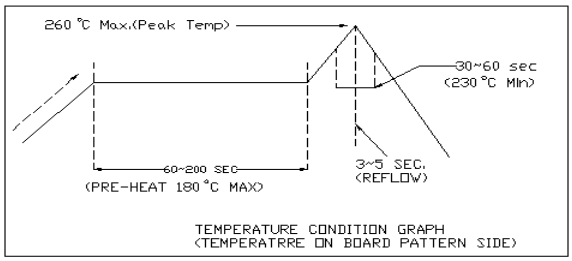 TEMPERATURE CONDITION GRAPH (TEMPERATRRE ON BOARD PATTERN SIDE)	No damage. （无损坏。）
		By soldering iron:350 ± 5℃ 3±0.5 Seconds. Method : 0.5mm From terminal tip tip and fitting nail tip. （通过烙铁：350±5℃ ，3±0.5秒。 方法：距端子尖和耳扣尖 0.5 mm）	

喬訊電子工業股份有限公司
CHYAO SHIUNN ELECTRONIC INDUSTRIAL LTD.
7FL., NO.17, LANE 3, SEC.1 CHUNG CHENG EAST RD.,
TAMSHUI, TAIPEI, TAIWAN, R.O.C.
TEL: 886-2-2629-9955 (REP) FAX: 886-2-2626-6677
http://www.chyaoshiunn.com.tw E-mail:cs@chyaoshiunn.com.tw

Type Document	Product Specification	Revised /Edition	G
Date Issued	2003/09/01	Data Revised	2022/02/10
Subject: JS-1146-XX、JS-1146-TXX、JS-1147V-XX、JS-1147H-XX Pitch 1.25mm SMT Series Wire to Board Connector			Issued By: Engineering Dept.

9.0 Insertion Force (I.F.) & Retention Force (R.F.)（插入力和保持力）

9.1 Requirement（要求）：

No. Of Circuits	AT INITIAL		AT 50TH	No. Of Circuits	AT INITIAL		AT 50TH
	I.F. (MAX)	R.F. (MIN)	R.F. (MIN)		I.F. (MAX)	R.F. (MIN)	R.F. (MIN)
02	2.00	0.28	0.18	09	5.50	0.56	0.46
03	2.50	0.30	0.20	10	6.00	0.59	0.49
04	3.00	0.33	0.23	11	6.50	0.62	0.52
05	3.50	0.38	0.28	12	7.00	0.65	0.55
06	4.00	0.43	0.33	13	7.50	0.68	0.58
07	4.50	0.48	0.38	14	8.00	0.71	0.61
08	5.00	0.53	0.43	15	8.50	0.74	0.64

Unit: Kg/f

10.0 Remark: Any change or revision for the product specification will not be announced in advance. Please contact our sales representative for the latest information.

（备注：产品规格如有变更或修订，恕不另行通知。有关最新信息，请与我们的销售代表联系。）