## ZENER DIODES

**POWER DISSIPATION: 500 mW**

### FEATURES

◇ Silicon planar power zener diodes

◇ The zener voltages are graded according to the international E 24 standard. Standard zener voltage tolerance is ±5%. Replace suffix "C" with "B" for ±2%, other voltage tolerance and other zener voltage are available upon request.

### MECHANICAL DATA

◇ Case:MINI-MELF,glass case

◇ Terminals: Solderable per MIL-STD-202, method 208

◇ Polarity: Cathode band

◇ Marking: Type number

◇ Approx. Weight: 0.031 grams.

### MINI-MELF

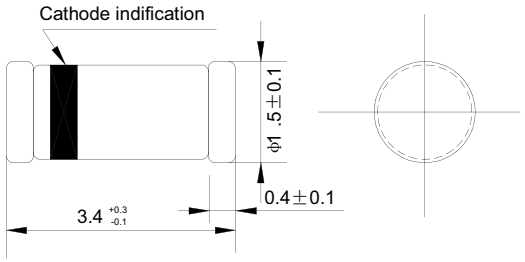


Dimensions in millimeters

### MAXIMUM RATINGS AND ELECTRICAL CHARACTERISTICS

Ratings at 25℃ ambient temperature unless otherwise specified.

| | SYMBOL | VALUE | UNIT |
|---|---|---|---|
| Zener current (see Table "Characteristics") | | | |
| Power dissipation @ $T_{amb}$=50℃ | $P_{tot}$ | 500[1)] | mW |
| Junction temperature | $T_J$ | 200 | ℃ |
| Storage temperature range | $T_s$ | -65---+200 | ℃ |

| | SYMBOL | MIN | TYP | MAX | UNIT |
|---|---|---|---|---|---|
| Thermal resistance junction to ambient | $R_{\theta JA}$ | — | — | 380[1)] | K/W |
| Forward voltage at $I_F$=10mA | $V_F$ | — | — | 0.9 | V |

NOTES: (1) Device mounted on a ceramic substrate of 10X10X0.6mm.

## ELECTRICAL CHARACTERISTICS (Ratings at 25℃ ambient temperature unless otherwise specified) TABLE1

| BZV55-BXXX CXXX | Working voltage $V_Z$ at $I_{ztest}$=5mA | | | | Dynamic resistance rzj(Ω) | | | | Temp.coefficient of zener voltage at $I_Z$=5mA $S_z$(mV/K) | | | Maximum reverse leakage current | | Maximum capacitance $V_R$=0V f=1MH$_Z$ | Non-repetitive peak reverse current at $T_P$=100μs |
|---|---|---|---|---|---|---|---|---|---|---|---|---|---|---|---|
| | Tol.±2%(B) | | Tol.±5%(C) | | at $I_{ztest}$=1mA | | at $I_{ztest}$=5mA | | | | | | | | |
| | MIN. | MAX. | MIN. | MAX. | TYP. | MAX. | TYP. | MAX. | MIN. | TYP. | MAX. | $I_R$ (n A) | at $V_R$ (V) | Cd (p F) | $I_{ZSM}$ (A) |
| 2V4 | 2.35 | 2.45 | 2.2 | 2.6 | 275 | 600 | 70 | 100 | -3.5 | -1.6 | 0 | 50000 | 1.0 | 450 | 6.0 |
| 2V7 | 2.65 | 2.75 | 2.5 | 2.9 | 300 | 600 | 75 | 100 | -3.5 | -2 | 0 | 20000 | 1.0 | 450 | 6.0 |
| 3V0 | 2.94 | 3.1 | 2.8 | 3.2 | 325 | 600 | 80 | 95 | -3.5 | -2.1 | 0 | 10000 | 1.0 | 450 | 6.0 |
| 3V3 | 3.23 | 3.37 | 3.1 | 3.5 | 350 | 600 | 85 | 95 | -3.5 | -2.4 | 0 | 5000 | 1.0 | 450 | 6.0 |
| 3V6 | 3.53 | 3.67 | 3.4 | 3.8 | 375 | 600 | 85 | 90 | -3.5 | -2.4 | 0 | 5000 | 1.0 | 450 | 6.0 |
| 3V9 | 3.82 | 3.98 | 3.7 | 4.1 | 400 | 600 | 85 | 90 | -3.5 | -2.5 | 0 | 3000 | 1.0 | 450 | 6.0 |
| 4V3 | 4.21 | 4.39 | 4.0 | 4.6 | 410 | 600 | 80 | 90 | -3.5 | -2.5 | 0 | 3000 | 1.0 | 450 | 6.0 |
| 4V7 | 4.61 | 4.79 | 4.4 | 5.0 | 425 | 500 | 50 | 80 | -3.5 | -1.4 | 0.2 | 3000 | 2.0 | 300 | 6.0 |
| 5V1 | 5.00 | 5.2 | 4.8 | 5.4 | 400 | 480 | 40 | 60 | -2.7 | -0.8 | 1.2 | 2000 | 2.0 | 300 | 6.0 |
| 5V6 | 5.49 | 5.71 | 5.2 | 6.0 | 80 | 400 | 15 | 40 | -2.0 | 1.2 | 2.5 | 1000 | 2.0 | 300 | 6.0 |
| 6V2 | 6.08 | 6.32 | 5.8 | 6.6 | 40 | 150 | 6.0 | 10 | 0.4 | 2.3 | 3.7 | 3000 | 4.0 | 200 | 6.0 |
| 6V8 | 6.66 | 6.94 | 6.4 | 7.2 | 30 | 80 | 6.0 | 15 | 1.2 | 3.0 | 4.5 | 2000 | 4.0 | 200 | 6.0 |
| 7V5 | 7.35 | 7.65 | 7.0 | 7.9 | 30 | 80 | 6.0 | 15 | 2.5 | 4.0 | 5.3 | 1000 | 5.0 | 150 | 4.0 |
| 8V2 | 8.04 | 8.36 | 7.7 | 8.7 | 40 | 80 | 6.0 | 15 | 3.2 | 4.6 | 6.2 | 700 | 5.0 | 150 | 4.0 |
| 9V1 | 8.92 | 9.28 | 8.5 | 9.6 | 40 | 100 | 6.0 | 15 | 3.8 | 5.5 | 7.0 | 500 | 6.0 | 150 | 3.0 |
| 10 | 9.8 | 10.2 | 9.4 | 10.6 | 50 | 150 | 8.0 | 20 | 4.5 | 6.4 | 8.0 | 200 | 7.0 | 90 | 3.0 |
| 11 | 10.8 | 11.2 | 10.4 | 11.6 | 50 | 150 | 10 | 20 | 5.4 | 7.4 | 9.0 | 100 | 8.0 | 85 | 2.5 |
| 12 | 11.8 | 12.2 | 11.4 | 12.7 | 50 | 150 | 10 | 25 | 6.0 | 8.4 | 10 | 100 | 8.0 | 85 | 2.5 |
| 13 | 12.7 | 13.3 | 12.4 | 14.1 | 50 | 170 | 10 | 30 | 7.0 | 9.4 | 11 | 100 | 8.0 | 80 | 2.5 |
| 15 | 14.7 | 15.3 | 13.8 | 15.6 | 50 | 200 | 10 | 30 | 9.2 | 11.4 | 13 | 50 | 11 | 75 | 2.0 |
| 16 | 15.7 | 16.3 | 15.3 | 17.1 | 50 | 200 | 10 | 40 | 10.4 | 12.4 | 14 | 50 | 12 | 75 | 1.5 |
| 18 | 17.6 | 18.4 | 16.8 | 19.1 | 50 | 225 | 10 | 45 | 12.4 | 14.4 | 16 | 50 | 14 | 70 | 1.5 |
| 20 | 19.6 | 20.4 | 18.8 | 21.2 | 60 | 225 | 15 | 55 | 12.3 | 15.6 | 18 | 50 | 15 | 60 | 1.5 |
| 22 | 21.6 | 22.4 | 20.8 | 23.3 | 60 | 250 | 20 | 55 | 14.1 | 17.6 | 20 | 50 | 17 | 60 | 1.25 |
| 24 | 23.5 | 24.5 | 22.8 | 25.6 | 60 | 250 | 25 | 70 | 15.9 | 19.6 | 22 | 50 | 18 | 55 | 1.25 |

www.gmesemi.com

## ELECTRICAL CHARACTERISTICS(Ratings at 25℃ ambient temperature unless otherwise specified) TABLE2

| BZV55-BXXX CXXX | Working voltage $V_Z$ at $I_{ztest}$=2mA | | | | Dynamic resistance rzj(Ω) | | | | Temp.coefficient of zener voltage at $I_Z$=2mA $S_z$(mV/K) | | | Maximum reverse leakage current | | Maximum capacitance $V_R$=0V f=1M$H_Z$ | Non-repetitive peak reverse current at $T_P$=100μs |
|---|---|---|---|---|---|---|---|---|---|---|---|---|---|---|---|
| | Tol.±2%(B) | | Tol.±5%(C) | | at $I_{ztest}$=0.5mA | | at $I_{ztest}$=2mA | | | | | | | | |
| | MIN. | MAX. | MIN. | MAX. | TYP. | MAX. | TYP. | MAX. | MIN. | TYP. | MAX. | $I_R$ (n A) | at $V_R$ (V) | Cd (p F) | $I_{ZSM}$ (A) |
| 27 | 26.5 | 27.5 | 25.1 | 28.9 | 65 | 300 | 25 | 80 | 18 | 22.7 | 25.3 | 50 | 20 | 50 | 1.0 |
| 30 | 29.4 | 30.6 | 28 | 32 | 70 | 300 | 30 | 80 | 20.6 | 25.7 | 29.4 | 50 | 22 | 50 | 1.0 |
| 33 | 32.3 | 33.7 | 31 | 35 | 75 | 325 | 35 | 80 | 23.3 | 28.7 | 33.4 | 50 | 24 | 45 | 0.9 |
| 36 | 35.3 | 36.7 | 34 | 38 | 80 | 350 | 35 | 90 | 26 | 31.8 | 37.4 | 50 | 27 | 45 | 0.8 |
| 39 | 38.2 | 39.8 | 37 | 41 | 80 | 350 | 40 | 130 | 28.7 | 34.8 | 41.2 | 50 | 28 | 45 | 0.7 |
| 43 | 42.1 | 43.9 | 40 | 46 | 85 | 375 | 45 | 150 | 31.4 | 38.8 | 46.6 | 50 | 32 | 40 | 0.6 |
| 47 | 46.1 | 47.9 | 44 | 50 | 85 | 375 | 50 | 170 | 35 | 42.9 | 51.8 | 50 | 35 | 40 | 0.5 |
| 51 | 50 | 52 | 48 | 54 | 90 | 400 | 60 | 180 | 38.6 | 46.9 | 57.2 | 50 | 38 | 40 | 0.4 |
| 56 | 54.9 | 57.1 | 52 | 60 | 100 | 425 | 70 | 200 | 42.2 | 52 | 63.8 | 50 | 39 | 40 | 0.3 |
| 62 | 60.8 | 63.2 | 58 | 66 | 120 | 450 | 80 | 215 | 58.8 | 64.4 | 71.6 | 50 | 43 | 35 | 0.3 |
| 68 | 66.6 | 69.4 | 64 | 72 | 150 | 475 | 90 | 240 | 65.6 | 71.7 | 79.8 | 50 | 48 | 35 | 0.25 |
| 75 | 73.5 | 76.5 | 70 | 79 | 170 | 500 | 95 | 255 | 73.4 | 80.2 | 88.6 | 50 | 53 | 35 | 0.2 |

www.gmesemi.com

**FIG.1 – THERMAL RESISTANCE FROM JUNCTION TO AMBIENT AS A FUNCTION OF PULSE DURATION.**

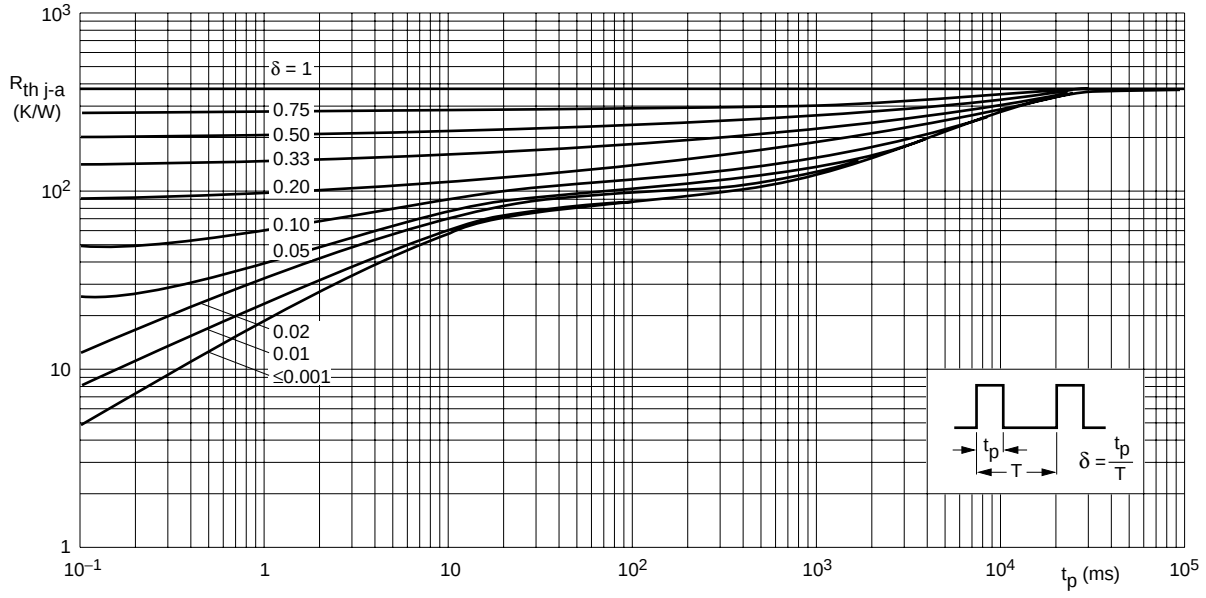


**FIG.2 – ADMISSIBLE POWER DISSIPATION VERSUS AMBIENT TEMPERATURE**

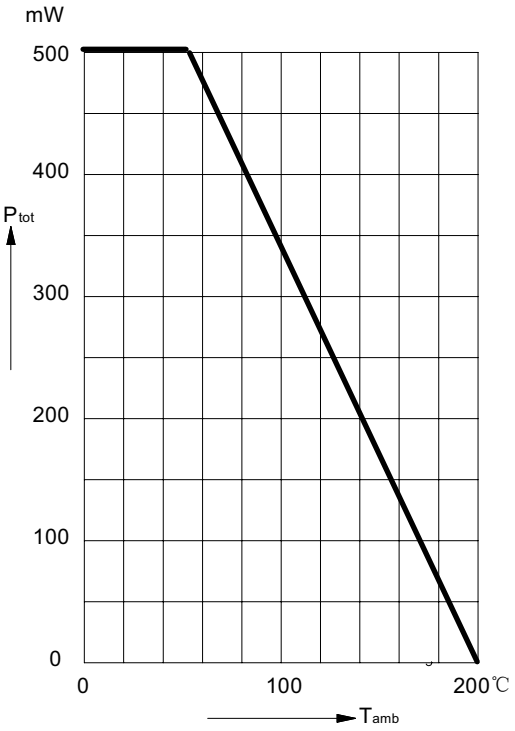

| 標　準　文　件 | 類別:Pad Layout |
| --- | --- |

# MINI-MELF

Unit: mm

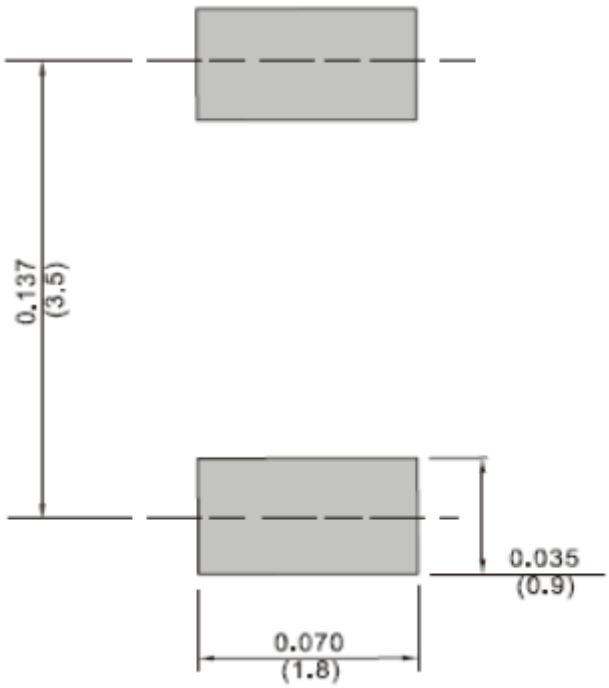

1. THE REEL SIDE (Unite in mm)

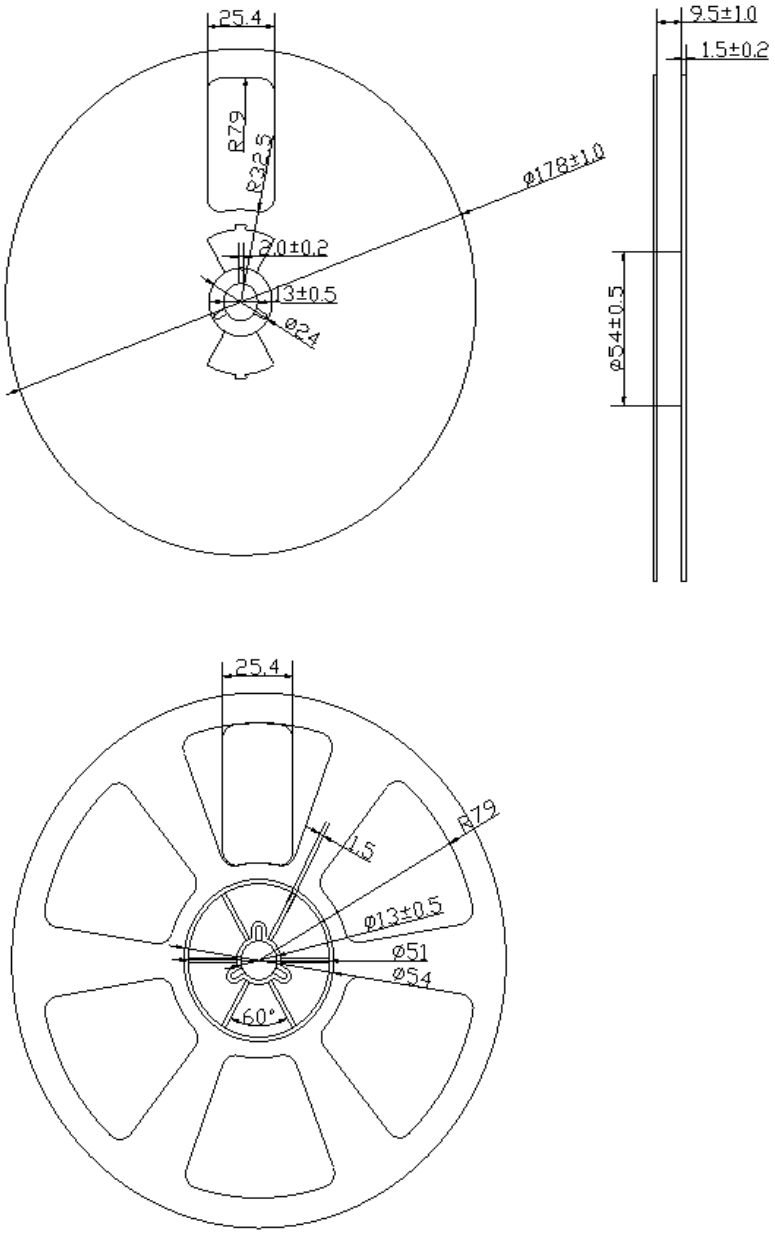

1. SKETCH MAP OF MINI-MELF DIVCES TAPING (Unite:mm)

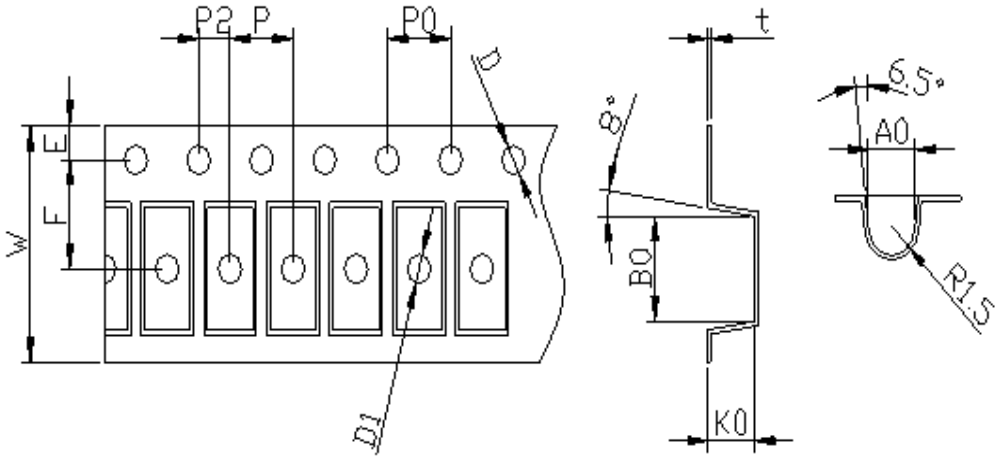


| 编 号 | W* | P* | E | F | D | P0 | P2 | A0* | B0* | K0* | t* |
|---|---|---|---|---|---|---|---|---|---|---|---|
| 尺 寸 | $8.0^{+0.20}_{-0.10}$ | $4.00^{+0.10}_{-0.10}$ | $1.75^{+0.10}_{-0.10}$ | $3.50^{+0.05}_{-0.05}$ | $1.50^{+0.1}_{-0}$ | $4.00^{+0.10}_{-0.10}$ | $2.00^{+0.1}_{-0.1}$ | $1.70^{+0.10}_{-0.10}$ | $3.65^{+0.10}_{-0.10}$ | $1.70^{+0.10}_{-0.10}$ | $0.25^{+0.05}_{-0.05}$ |

1. SKETCH MAP OF PACKAGE

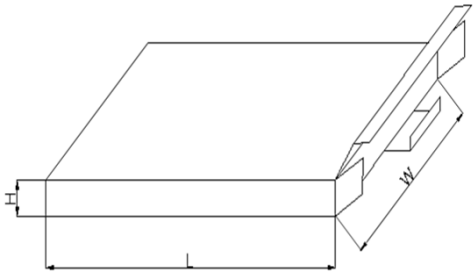


INNER BOX

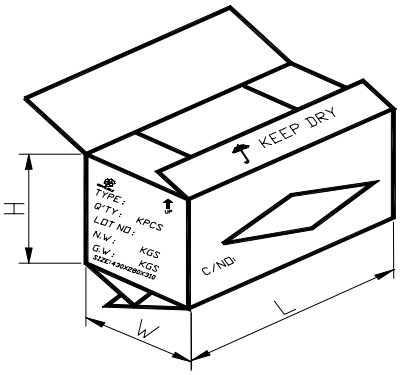


CARTON

2.CARRIER TAPE

| PACKAGING CODE | CASE TYPE | Q'TY/REEL (Kpcs) | REEL DIA (mm) | BOX SIZE (mm) | Q'TY/BOX (Kpcs) | CARTON SIZE (mm) |
|---|---|---|---|---|---|---|
| CB | MELF | 5 | 331 | 335*332*42 | 10 | 355*350*457 |
| CE | MINI- MELF | 2.5 | 178 | 182*182*35 | 5 | 443×215×305 |
| CF | | 2.5 | 178 | 185*185*105 | 20 | 443×215×305 |

| 封装 | PACKING | 最小包装数量(K) | 最小包装名称 | 最小包装尺寸 | 重量/只（g） | 数量/箱 | G.W(kgs) | N.W(kgs) |
|---|---|---|---|---|---|---|---|---|
| MINI-MELF | T/R | 2.5 | 蓝盘 | 7寸 | 0.031 | 120 | 9 | 8 |