18.5V~30.5V

POWER JACK P101

F101 3A/F1206

L101 Common Choke/NC

L102 Common Choke

U101 RT8279

U102 RT8279

Vout=1.222(1+R1/R2)

Vout=1.222(1+R1/R2)

U104 AZ1117CH-ADJ TO252

Vout=1.25(1+R2/R1)~=5V

U105 AP2114H-1.2TRG1

SM4305PSKC-TRG

LCD_VCC

VTCON_EN

SYSTEM +3.3V LED

BADGE +5V LED

M1 MASK-27C118SM M2 MASK-27C118SM M3 MASK-27C118SM M4 MASK-27C118SM M5 MASK-27C118SM M6 MASK-27C118SM

板內光學點

K1 K2 K3 K4 K5 K6 Mounting Hole MTH

鈺緯機密文件
不准複製引用
DIVA Confidential
NO Copy/Reproduction Allowed
鈺緯科技開發股份有限公司
DIVA LABORATORIES, LTD

| | |
|---|---|
| Title | Philips Ultrasound EPIQ |
| Size / Custom | Document Number 3PD539F011B / Rev B |
| Date: | Tuesday, March 16, 2021 |
| Sheet | 1 of 13 |

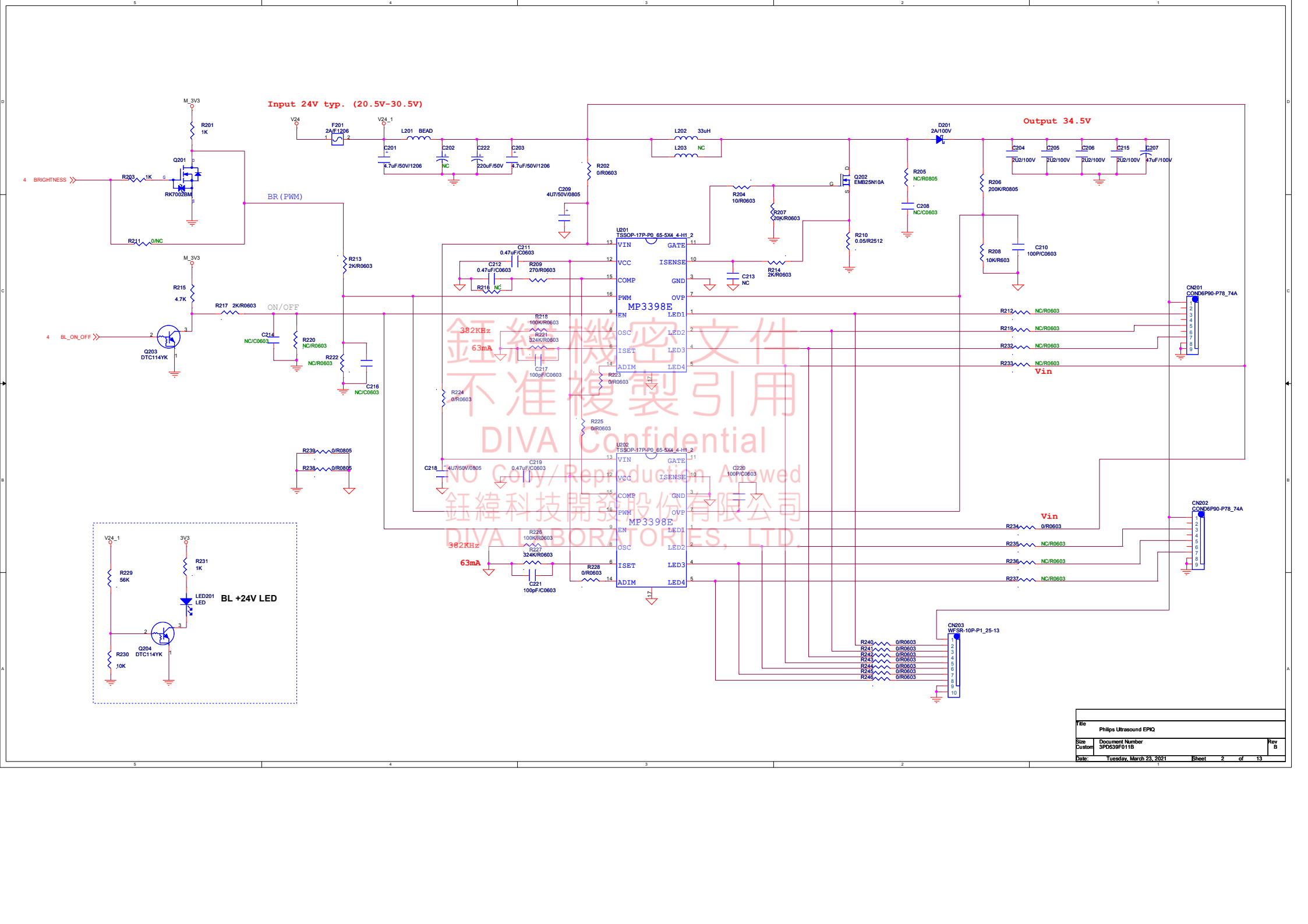
Input 24V typ. (20.5V-30.5V)
Output 34.5V
BR (PWM)
ON/OFF
BRIGHTNESS
BL_ON_OFF
M_3V3
V24
V24_1
3V3
MP3398E
382KHz
63mA
Vin
BL +24V LED
鈺緯機密文件
不准複製引用
DIVA Confidential
NO Copy / Reproduction Allowed
鈺緯科技開發股份有限公司
DIVA LABORATORIES, LTD.
Philips Ultrasound EPIQ
Document Number 3PD539F011B
Rev B
Tuesday, March 23, 2021
Sheet 2 of 13

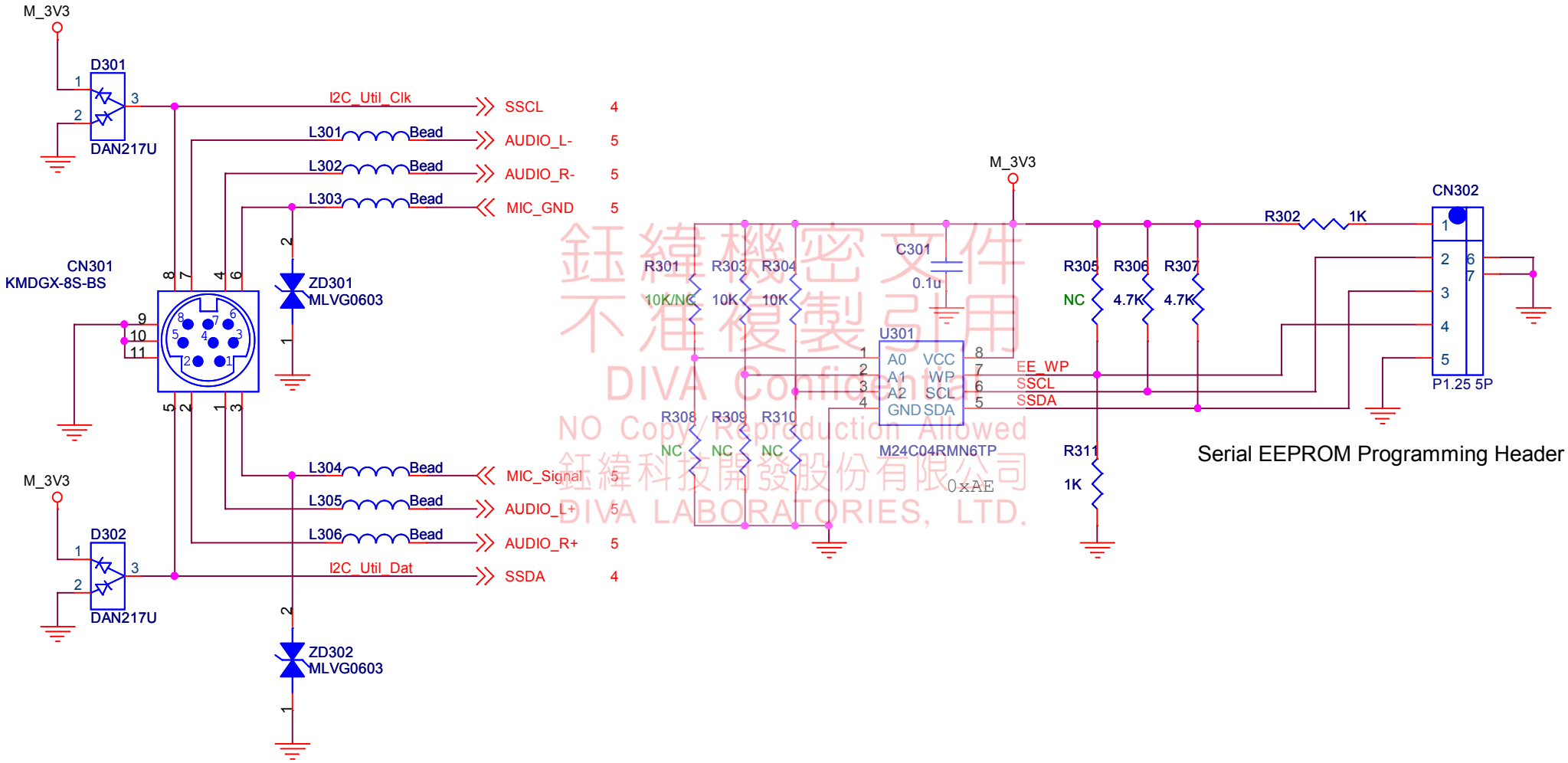


鈺緯機密文件
不准複製引用
DIVA Confidential
NO Copy/Reproduction Allowed
鈺緯科技開發股份有限公司
DIVA LABORATORIES, LTD.

| | | |
|---|---|---|
| Title | Philips Ultrasound EPIQ | |
| Size A | Document Number 3PD539F011B | Rev B |
| Date: Tuesday, March 16, 2021 | Sheet 3 of 13 | |

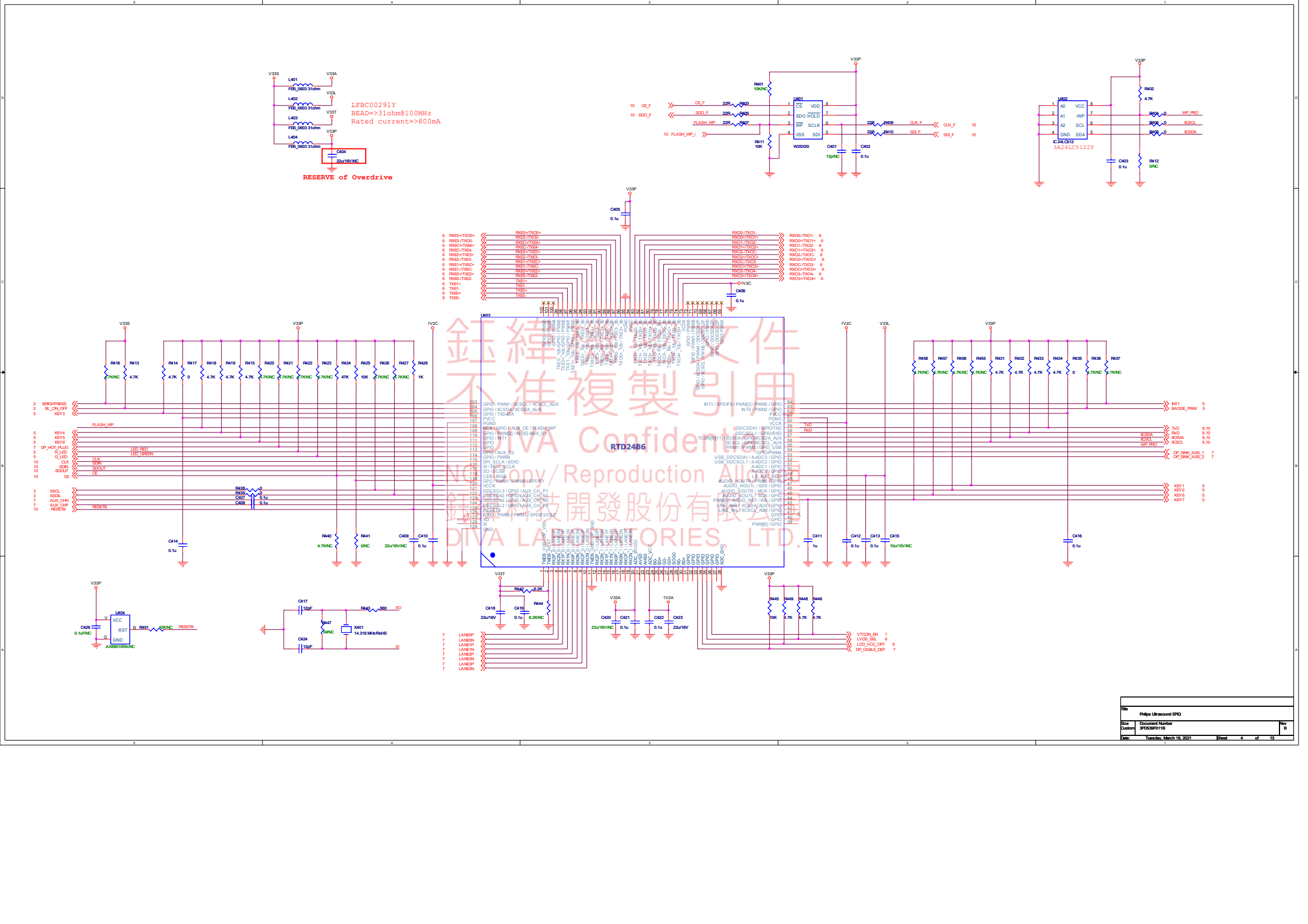

鈺緯軟件
不准複製引用
DIVA Confidential
No Copy / Reproduction Allowed
鈺緯科技開發股份有限公司
DIVA LABORATORIES, LTD.

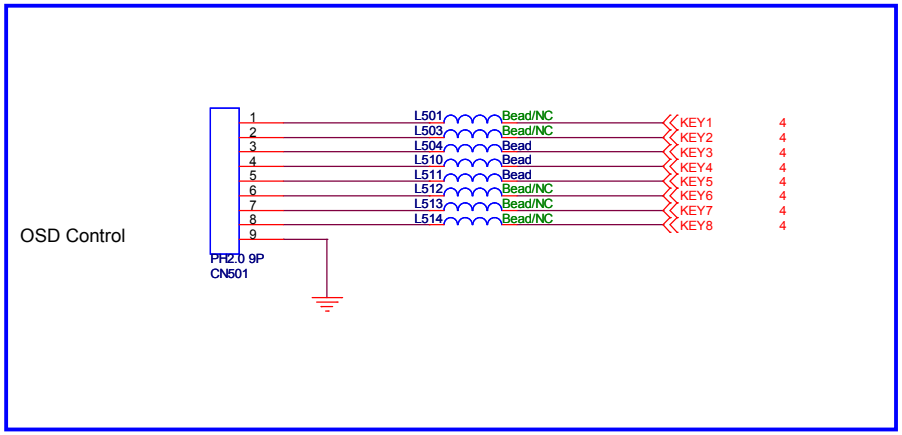


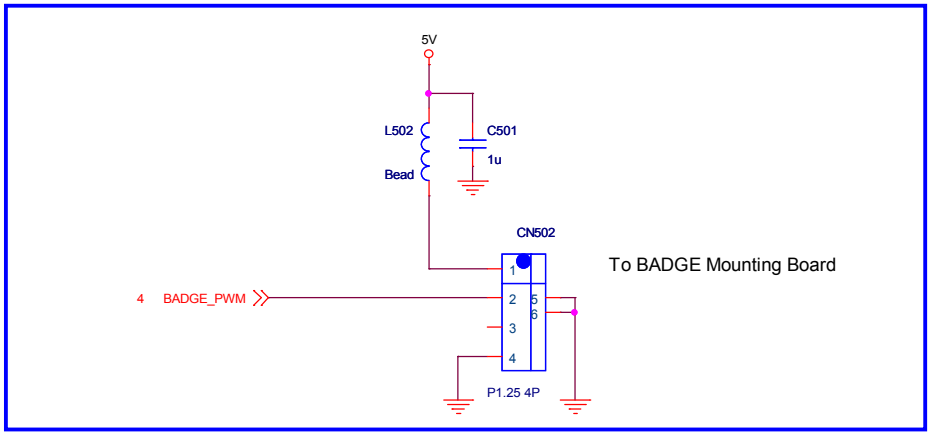


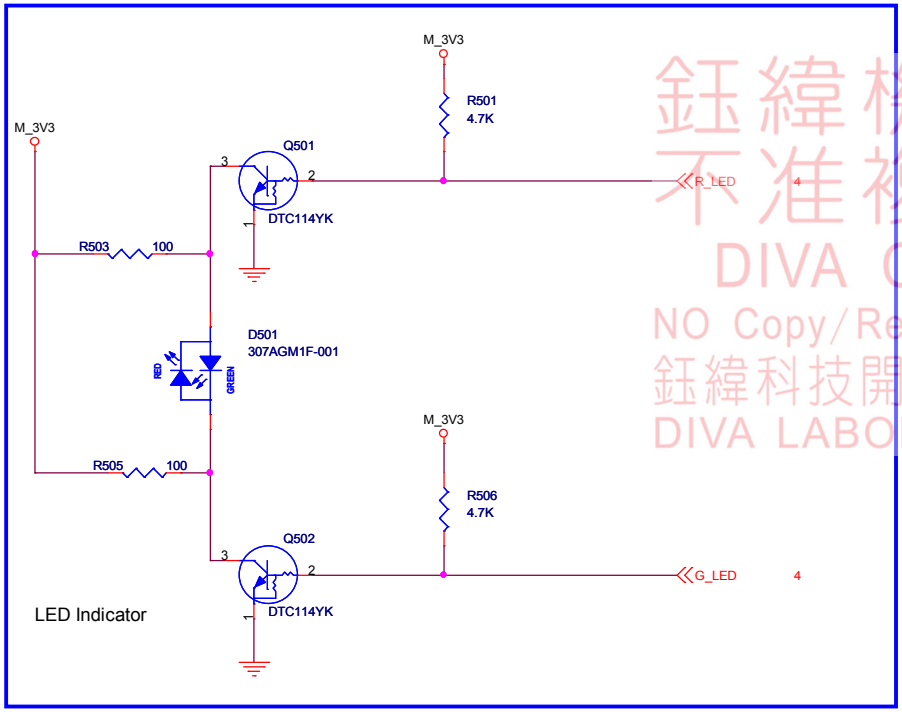


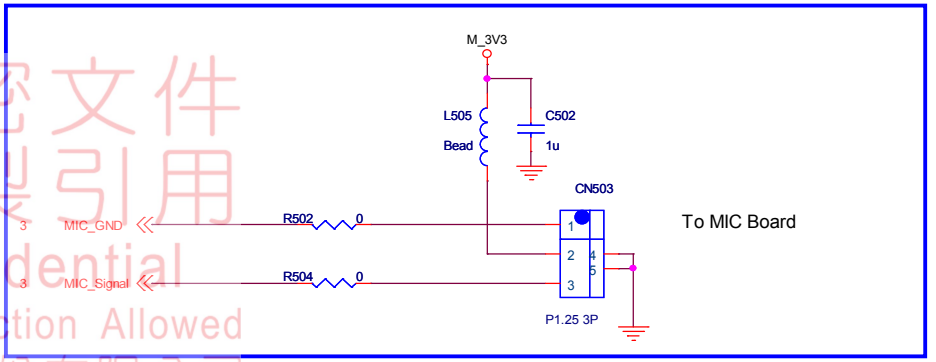


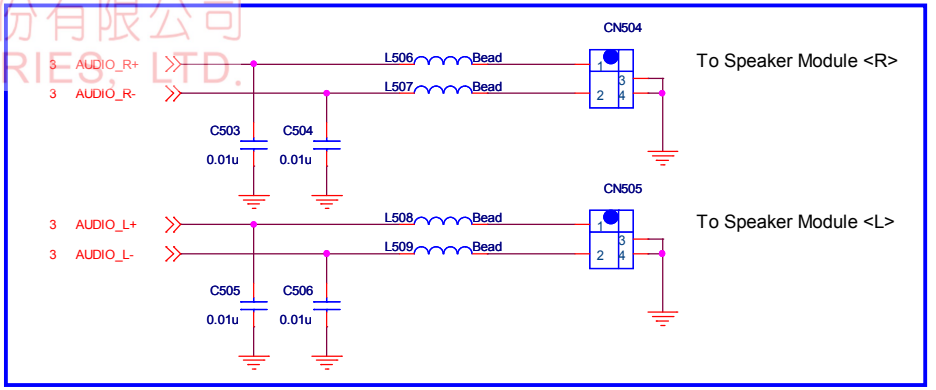


鈺緯機密文件
不准複製引用
DIVA Confidential
NO Copy/Reproduction Allowed
鈺緯科技開發股份有限公司
DIVA LABORATORIES, LTD.

| | | |
|---|---|---|
| Title | Philips Ultrasound EPIQ | |
| Size B | Document Number 3PD539F011B | Rev B |
| Date: Tuesday, March 16, 2021 | Sheet 5 of 13 | |

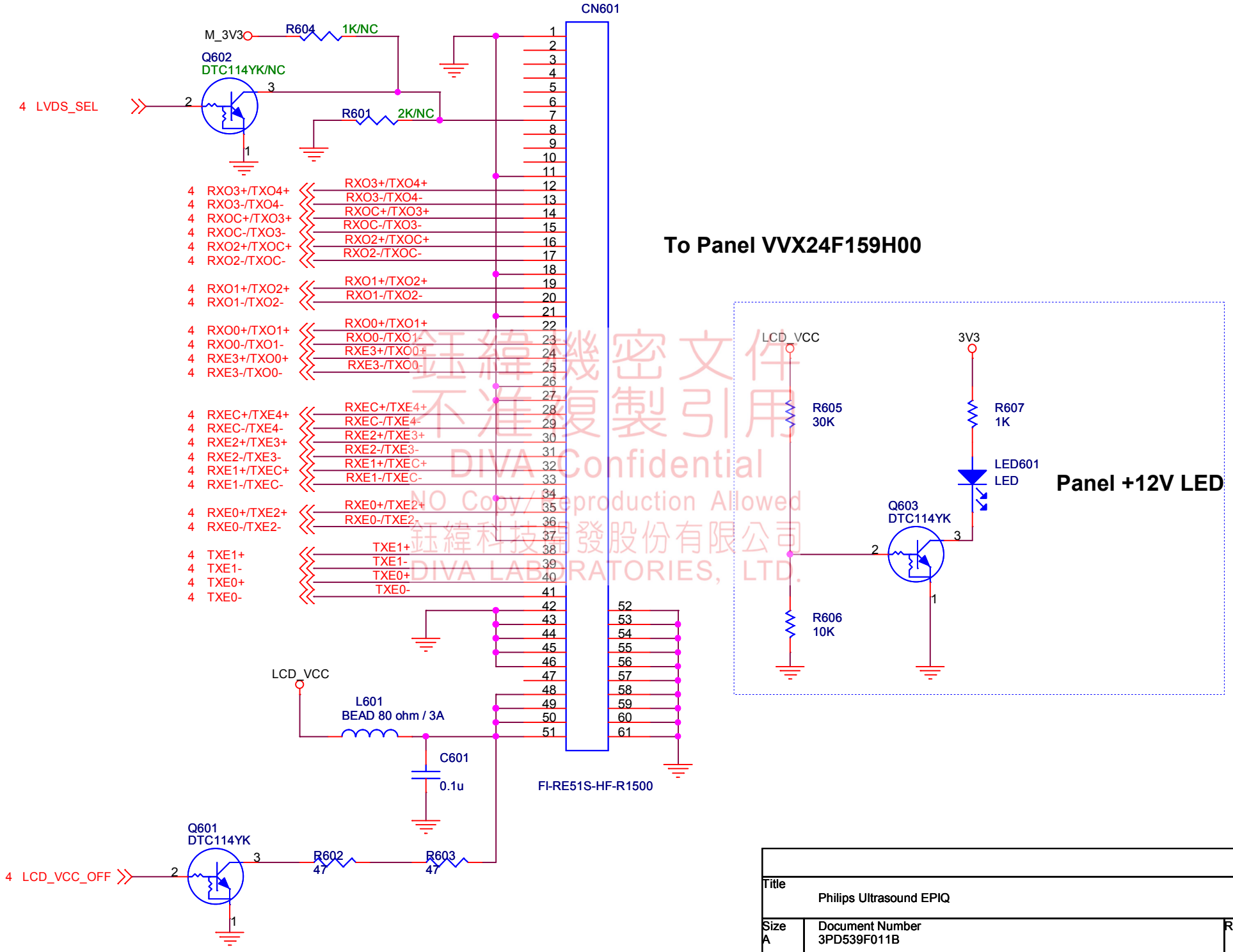


鈺緯機密文件
不准複製引用
DIVA Confidential
NO Copy/Reproduction Allowed
鈺緯科技開發股份有限公司
DIVA LABORATORIES, LTD.

| | | |
|---|---|---|
| Title | Philips Ultrasound EPIQ | |
| Size A | Document Number 3PD539F011B | Rev B |
| Date: Tuesday, March 16, 2021 | Sheet 6 of 13 | |

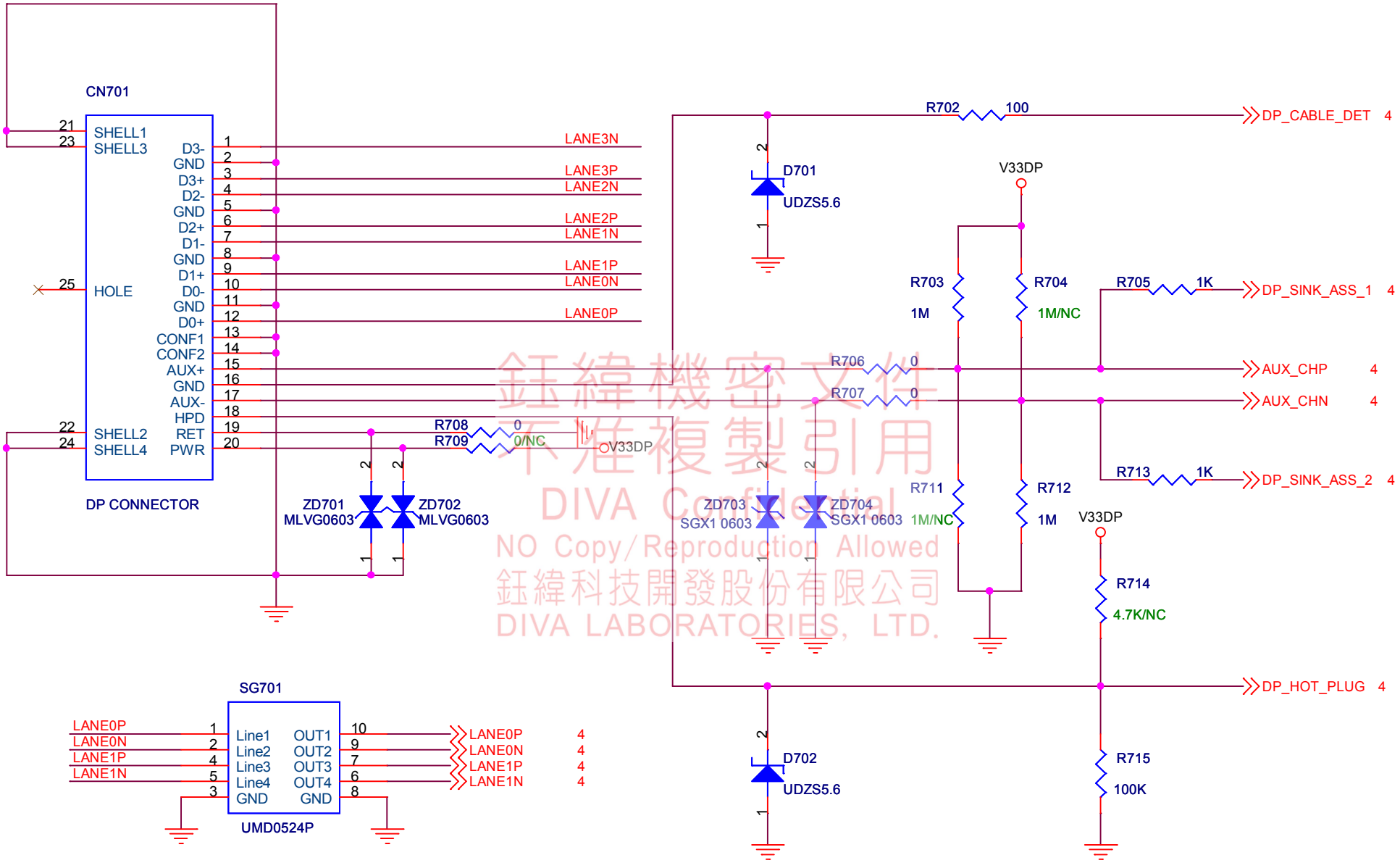


鈺緯機密文件
未准複製引用
DIVA Confidential
NO Copy/Reproduction Allowed
鈺緯科技開發股份有限公司
DIVA LABORATORIES, LTD.

| | | |
|---|---|---|
| Title | Philips Ultrasound EPIQ | |
| Size A | Document Number 3PD539F011B | Rev B |
| Date: Tuesday, March 16, 2021 | Sheet 7 of 13 | |

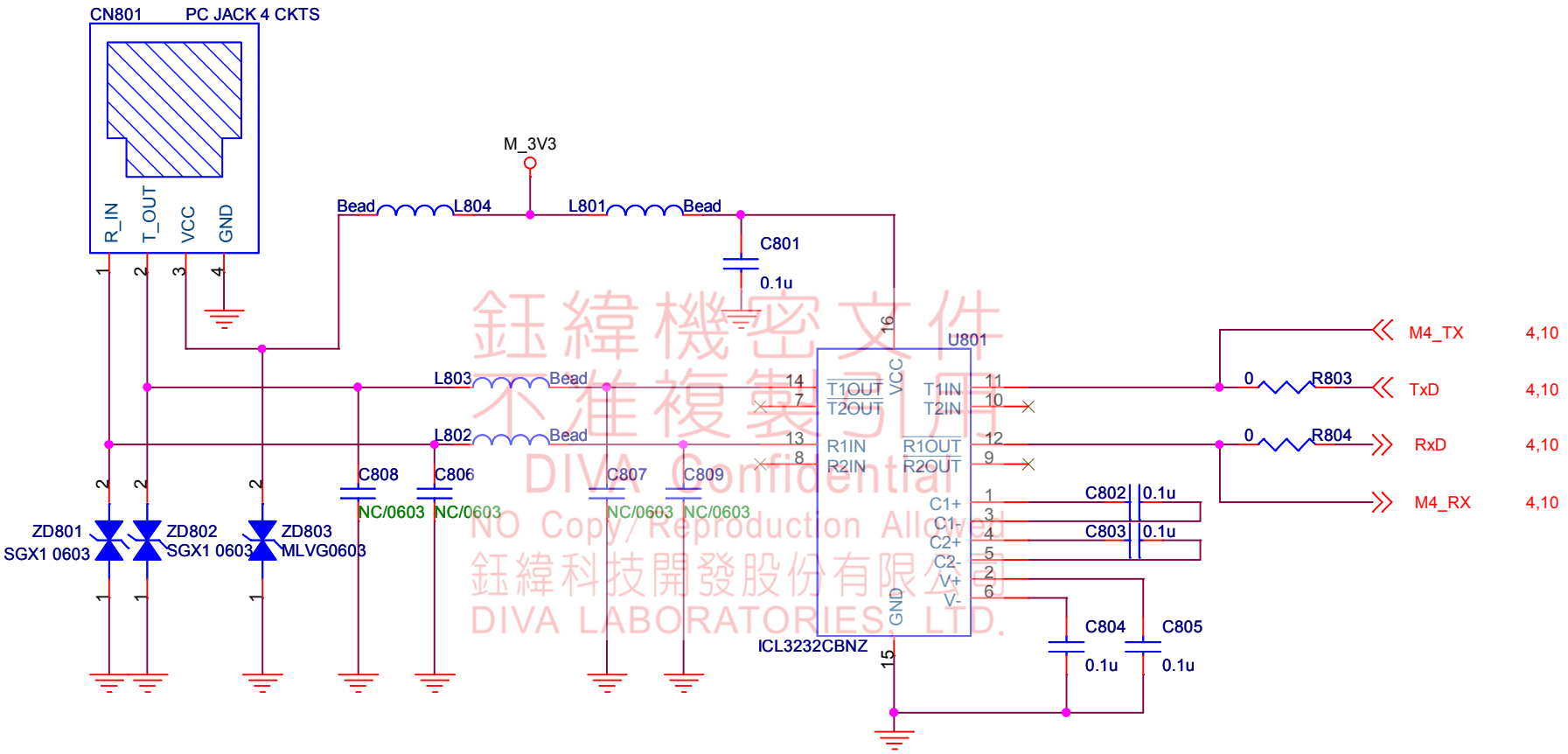


鈺緯機密文件
不准複製引用
DIVA Confidential
NO Copy/Reproduction Allowed
鈺緯科技開發股份有限公司
DIVA LABORATORIES, LTD.

For Debug Port

| | | | |
|---|---|---|---|
| Title | Philips Ultrasound EPIQ | | |
| Size A | Document Number 3PD539F011B | | Rev B |
| Date: | Tuesday, March 16, 2021 | Sheet 8 of 13 | |




鈺緯機密文件
不准複製引用
DIVA Confidential
NO Copy/Reproduction Allowed
鈺緯科技開發股份有限公司
DIVA LABORATORIES, LTD.

| | | |
|---|---|---|
| Title | Philips Ultrasound EPIQ | |
| Size A | Document Number 3PD539F011B | Rev B |
| Date: Tuesday, March 16, 2021 | Sheet 9 of 13 | |

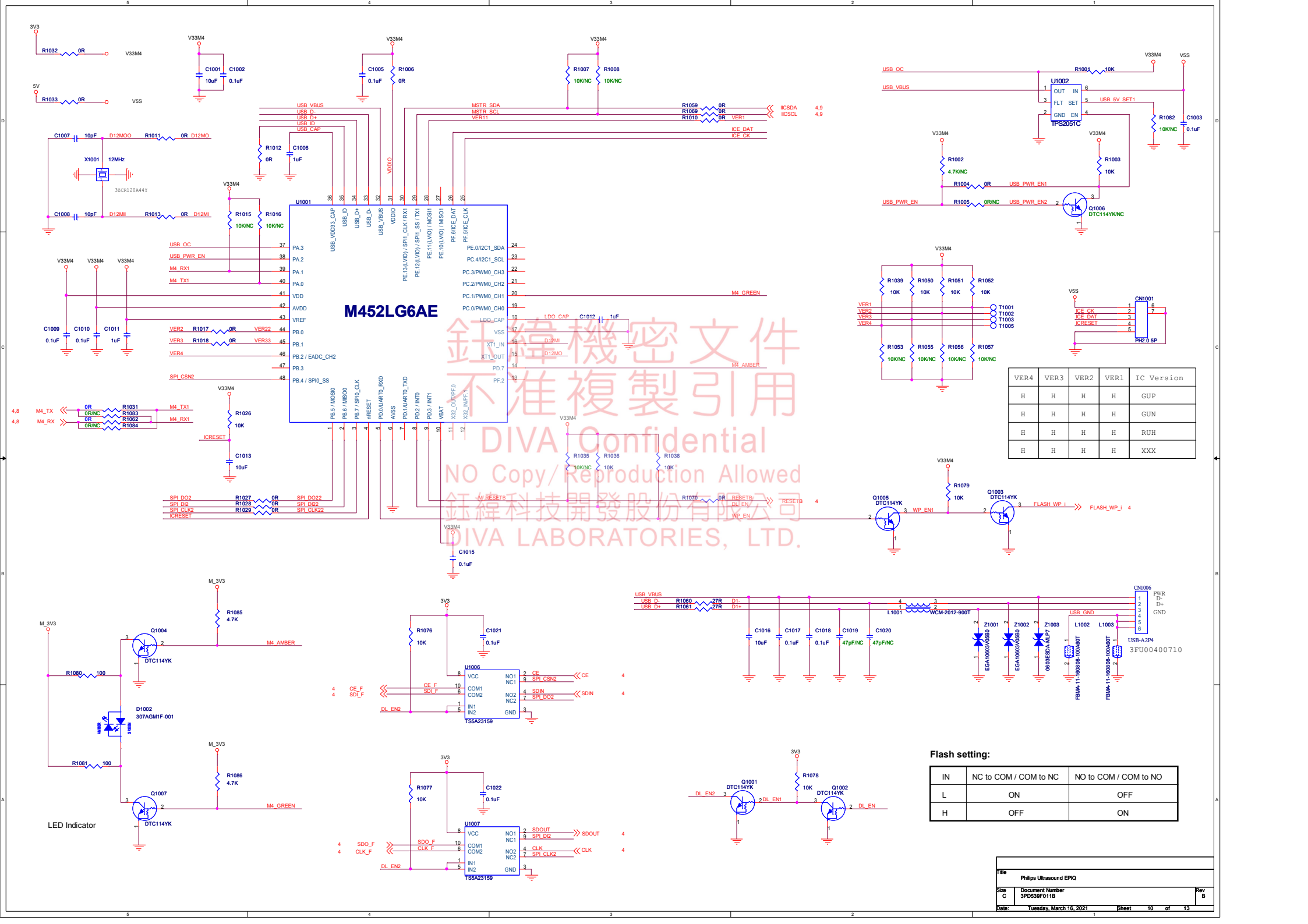


鈺緯機密文件
不准複製引用
DIVA Confidential
NO Copy/Reproduction Allowed
鈺緯科技開發股份有限公司
DIVA LABORATORIES, LTD.

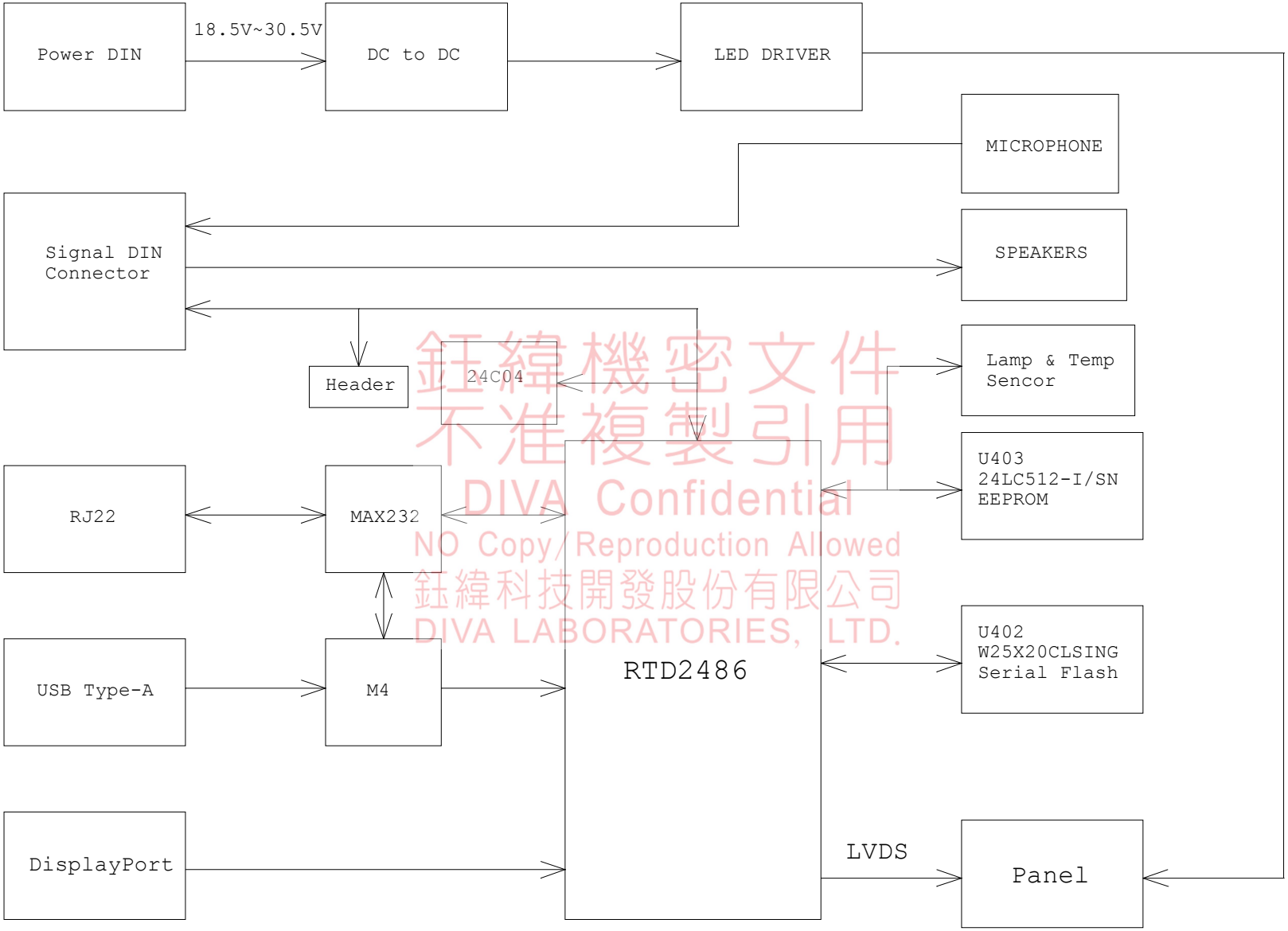


鈺緯機密文件
不准複製引用
DIVA Confidential
NO Copy/Reproduction Allowed
鈺緯科技開發股份有限公司
DIVA LABORATORIES, LTD.

| | | |
|---|---|---|
| Title | Philips Ultrasound EPIQ | |
| Size C | Document Number 3PD539F011B | Rev B |
| Date: Tuesday, March 16, 2021 | Sheet 11 of 13 | |

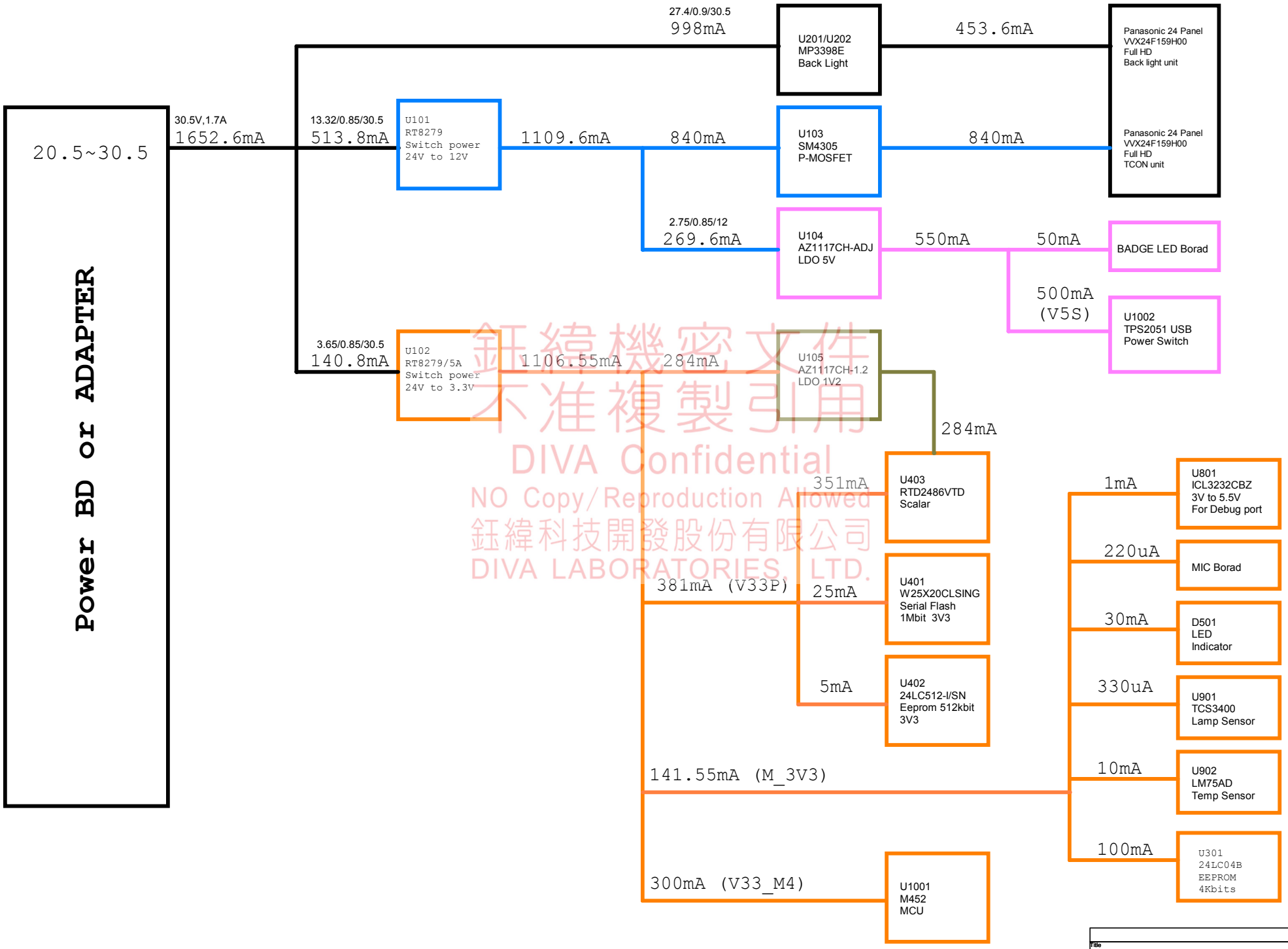


鈺緯機密文件
未准複製引用
DIVA Confidential
NO Copy/Reproduction Allowed
鈺緯科技開發股份有限公司
DIVA LABORATORIES, LTD.

| | | | |
|---|---|---|---|
| Title | Philips Ultrasound EPIQ | | |
| Size C | Document Number 3PD539F011B | | Rev B |
| Date: Tuesday, March 16, 2021 | | Sheet 12 of 13 | |

| Date | Description |
|---|---|
| 20191211 | Add C222 220U/50V DIP電容<br>Change CN1001 為SMD 90度<br>Add R906、R907、R908、R909<br>PCB 3PD539F0110 進階 3PD539F011A |
| 20210311 | Add CN203 for AUO Panel<br>Add R240 - R246<br>R221、R227、R206 電阻值修改<br>PCB 3PD539F011A 進階 3PD539F011B |

鈺緯機密文件
不准複製引用
DIVA Confidential
NO Copy/Reproduction Allowed
鈺緯科技開發股份有限公司
DIVA LABORATORIES, LTD.

| | | |
|---|---|---|
| Title: Philips Ultrasound EPIQ | | |
| Size: A | Document Number: 3PD539F011B | Rev: <B> |
| Date: Tuesday, March 23, 2021 | Sheet 13 of 13 | |