PART NO.	REV	SYMBOL	DESCRIPTION	LOCATED	REASON	SIGN	DATE
	A		FIRST RELEASE			S.F. YU	10/19/09

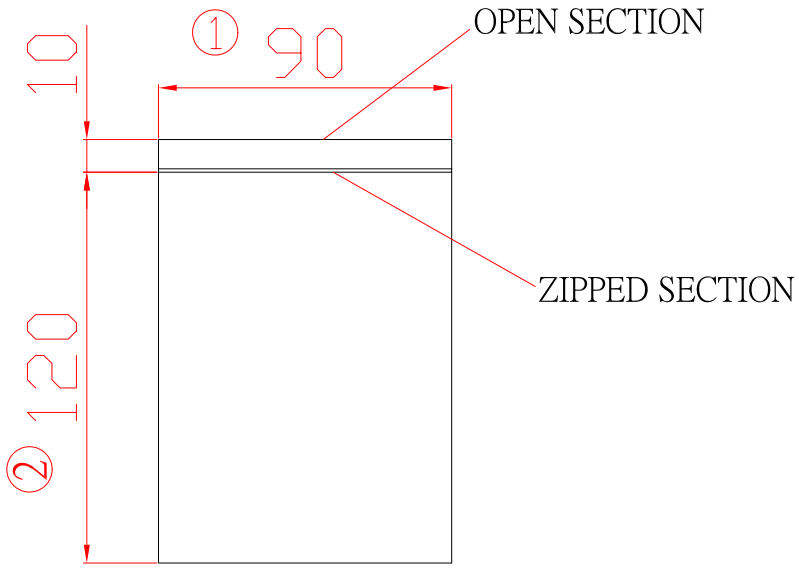

NOTE:

1. ⓝ THIS SYMBOL INDICATED CRITICAL DIMENSION.
2. BAG COLOR: COLORLESS (TRANSPARENCY)
3. MATERIAL: LDPE, THICKNESS≥0.05<0.08 mm
4. TOLERANCE OF DIM: +/-10 mm
5. LEVEL-1 ENVIRONMENT-RELATED SUBSTANCES SPECIFIED IN SS-00259 SHOULD NEVER BE CONTAINED.
6. MOLDING RESIN, INK, PAINT AND WIRE RODS SHOULD BE PROCURED ONLY FROM THE SUPPLIER APPROVED AS A SONY GREEN PARTNER.

MODEL	LMD-940W		NAME	BAG ZIPPED		
DRN	S.F. YU	10/19/09	MATERIAL	SEE NOTES		
DSN	S.F. YU	10/19/09	FINISH	SEE NOTES		
CKD	PATRICIA TSAI	10/19/09	SCALE	1/1	DIM IN	mm
APPD	ROBERT LIU	10/19/09	SHEET	1 OF 1	CAVITIES	
Qisda Corporation						

TOLERANCE UNLESS OTHERWISE SPECIFIED (±)							
CLASS	A	B	C	D	E	F	G
< 8mm	0.05	0.1	0.1	0.2	0.2	0.4	0.4
8 ~ 25mm	0.08	0.15	0.15	0.3	0.3	0.6	0.6
25 ~ 80mm	0.12	0.2	0.25	0.4	0.5	0.8	1.0
80 ~ 250mm	0.25	0.3	0.4	0.6	0.8	1.2	1.5
250 ~ 800mm	0.5	0.6	0.8	1.0	1.5	2.0	3.0
> 800mm	1.0	1.0	1.5	1.7	3.0	4.0	6.0
ANGLE	0.5	0.5	0.5	0.5	1.0	1.0	1.0
FILE NAME							
PART NO.	4B.10S02.001						