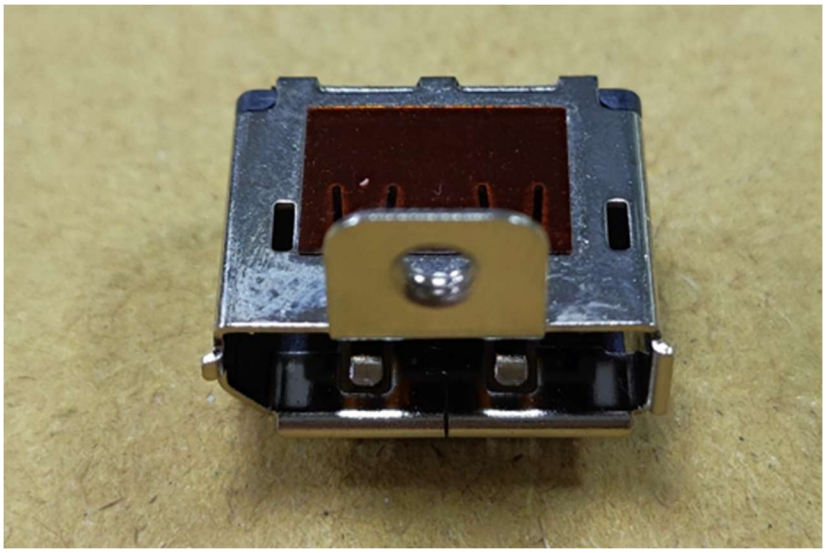
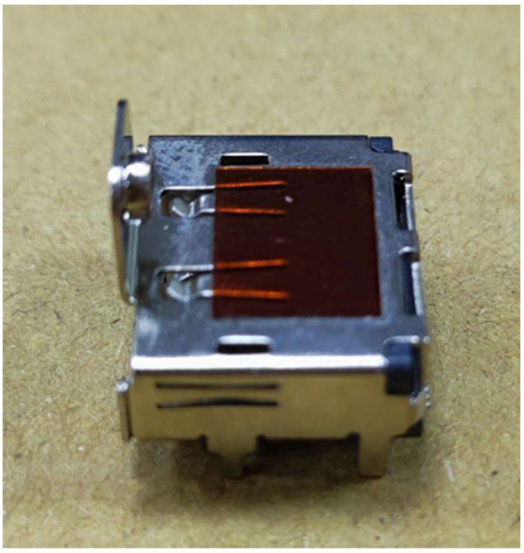
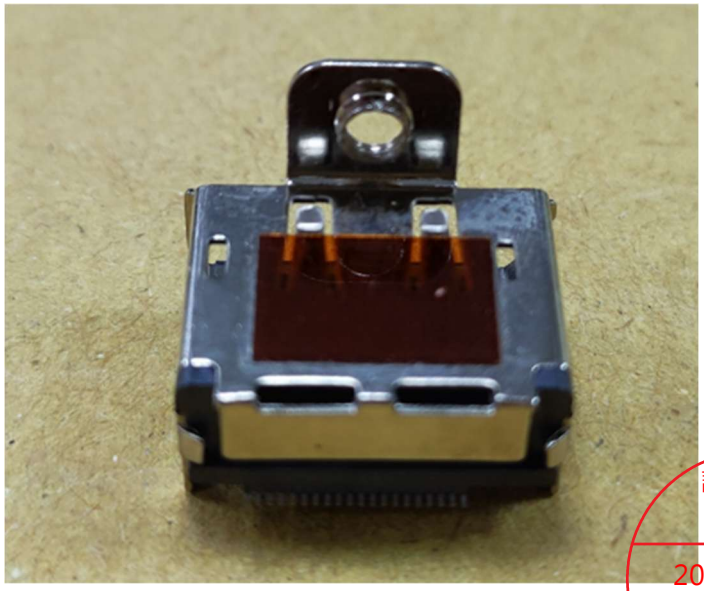
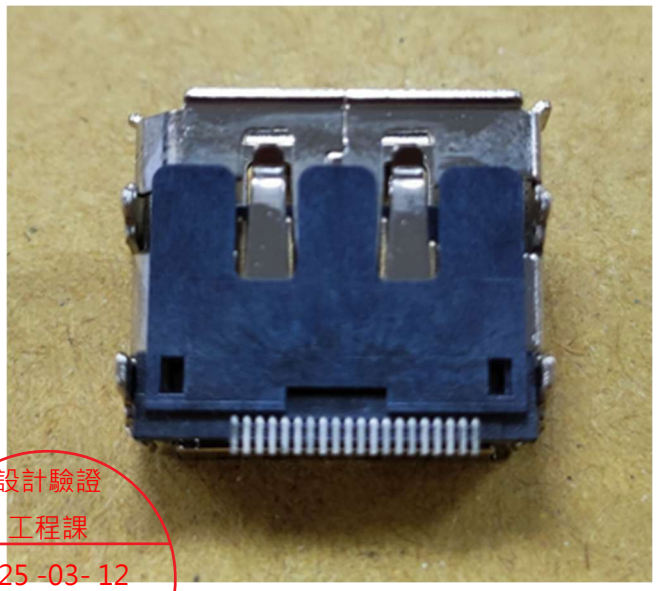
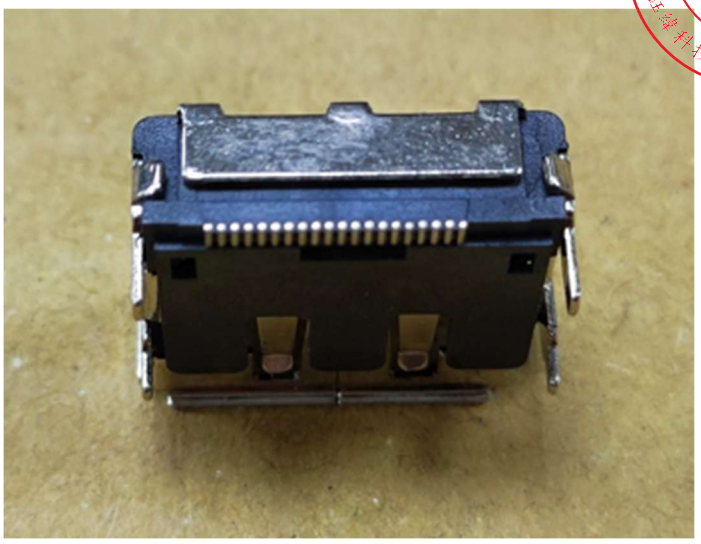
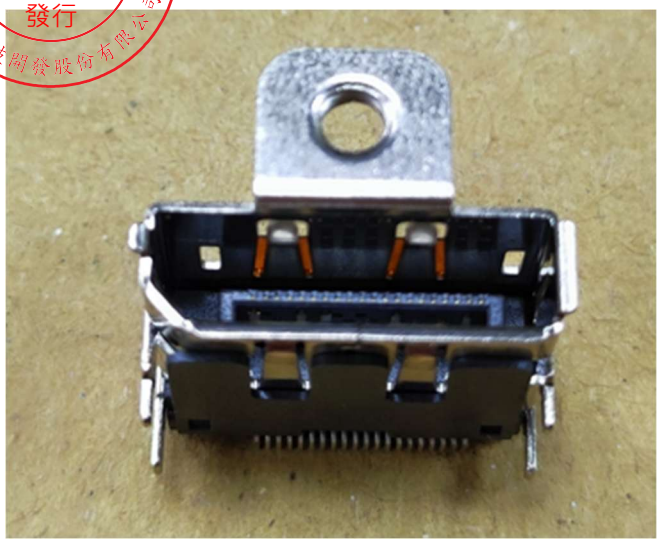

設計驗證
工程課
2025 -03- 12
發行

承　認　書
SPECIFICATION FOR APPROVAL

客　　戶：鈺緯科技開發股份有限公司
CUSTOMER

品　　名：DisplayPort SMT Type 帶鎖扣 9.58H
DESCRIPTION

客 戶 料 號：3FF02015510 CONN.F (F0313)
BUYER P/N.

DLK 料號：DPT2PA-20BM4RN10
DLK P/N

客戶承認意見欄 CUSTOMER APPROVED BY

設計驗證
工程課
2025 -03- 12
發行
鈺緯科技開發股份有限公司

臺灣德力康電子科技有限公司
DLK ELECTRONICS TECHNOLOGY CO.,LTD
地址：臺灣德力康電子科技有限公司
TEL：03-2151526/2151599

核准		審核		制作	邱宇	日期	2025/06/16

目　录

Directory

1. 封面

Cover

2. 目录

Directory

3. 履历表

Resume

4. 图面

Drawings

5. 规格书

Specification

6. 环保资料

Environmental protection information

7. 环境管理物质不使用证书

Environmental management material don't use certificate

COMPONENT SPEC VERSION RECORD

CUSTOMER PART NO.	3FF02015510(F0313)	DLK PART NO.	DPT2PA-20BM4RN10

VER	MINUTE OF CHANGES	DLK CHECK	RELEASE DATE
A	CHECKED AND RELEASED	邱宇	2023-6-16

符合"DLK环境管理物质技术标准"

符合VESA协会规范标准"

工程变更通知单 ECN(DCN) NO.	版本 REV	日期 DATE	说明 DESCRIPTION	变更 CHANGE	核准 APPRO.
———	X0	20221010	NEW RELEASE	——	——

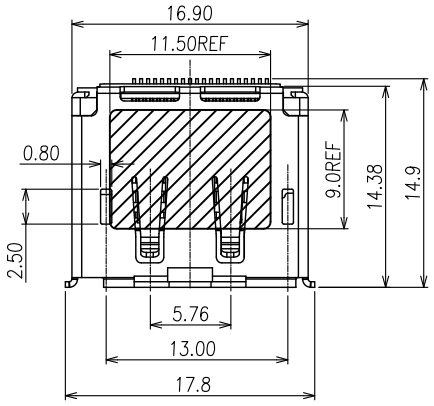

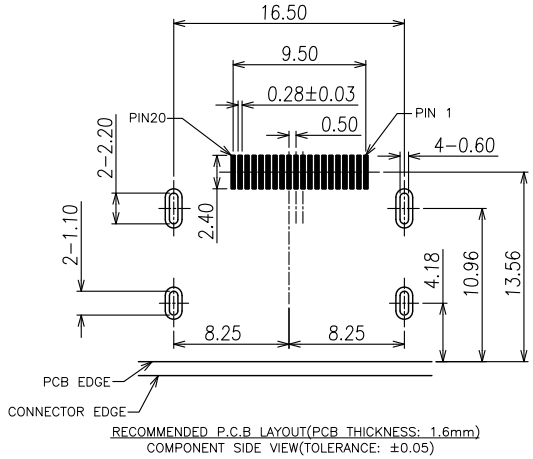

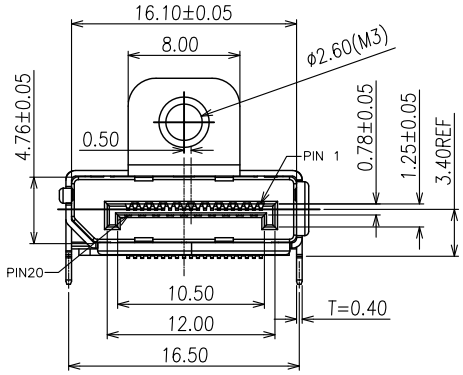

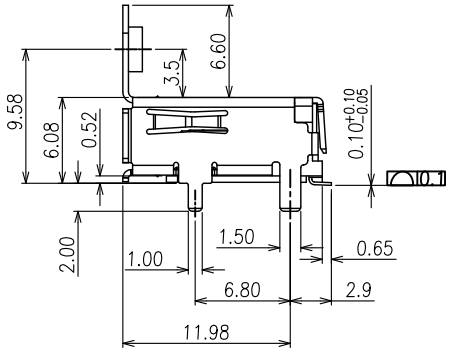

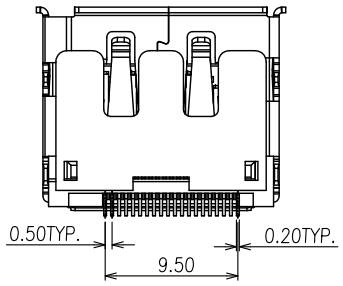

NOTE:

1.MATERIAL:

1.1 HOUSING: LCP, UL 94V-0 COLOR: BLACK.

1.2 CONTACT: COPPER ALLOY, T=0.20mm.

1.3 SHIELD: COPPER ALLOY, T=0.40mm.

2.FINISH:

2.1 CONTACT: GOLD (15U") PLATING IN CONTACT AREA, 80u"MIN MATTE TIN PLATED IN SOLDER AREA, 30u" MIN. NICKEL UNDERPLATED OVERALL.

2.2 SHIELD: 50u" MIN. NICKEL UNDERPLATED OVERALL.

3.MECHANICAL CHARACTERISTICS

3.1 RATING CURRENT: 0.5A

3.2 RATING VOLTAGE: 40V

3.3 CONTACT RESISTANCE: 40 mΩ MAX

3.4 INSULATION RESISTANCE:

a, UNMATED: 100MΩ MIN AT 500 VDC

b, MATED: 10M OHMS MIN AT 150 VDC

3.5 DIELECTRIC WITHSTANDING VOLTAGE: 500V AC/1MINUTE

3.6 DURABILTY: 10000 CYCLES.

3.7 OPERATING TEPERATURE: -20°C TO +85°C

3FF02015510(F0313)

設計驗證
工程課
2025 -03- 12
發行
金鑽科技開發股份有限公司

GENERAL TOLERANCE UNLESS OTHERWISE NOTED	
Angle	±2°
X.	±0.38
.X	±0.30
.XX	±0.25
.XXX	±0.15
A4	

德力康电子科技有限公司
DELIKANG ELECTRONICS TECHNOLOGY CO.,LTD

C	名称 TITLE:	DisplayPort SMT Type 带锁扣 9.58H			
档案名称 FILE NAME.	C-DPT2P-00-00		料号 PART NO:	DPT2PA-20BM4RN10	
DRAWING	覃智森	CHECKED		APPROVED	
UNIT:	mm	SCALE	1:1	SHEET: 1 of 1	

符合"DLK环境管理物质技术标准"

工程变更通知单 ECN(DCN) NO.	版本 REV	日期 DATE	说明 DESCRIPTION	改变 CHANGE	承认 APPRO.
———	X0	20210602	NEW	——	——

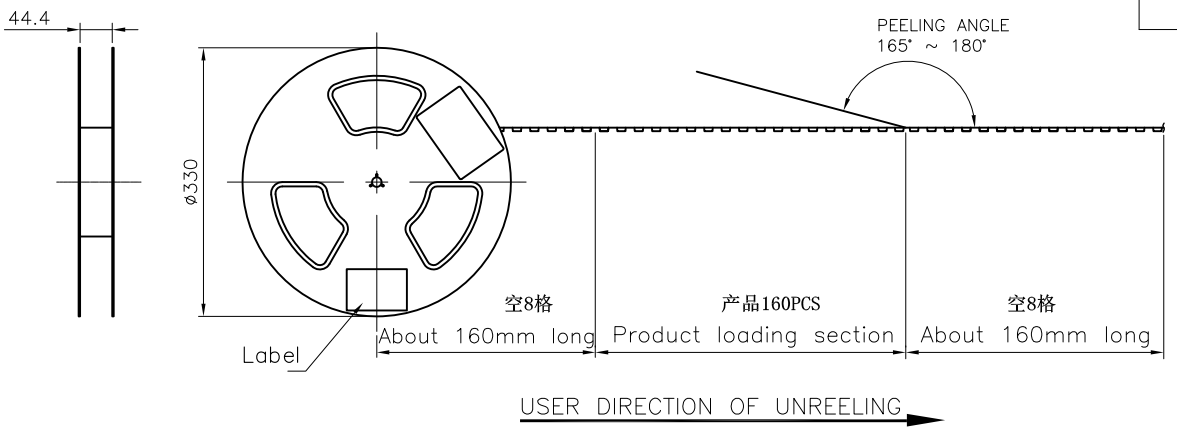

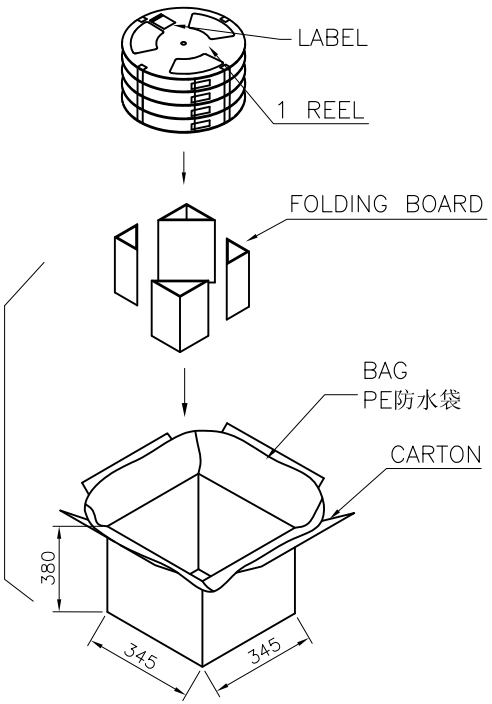

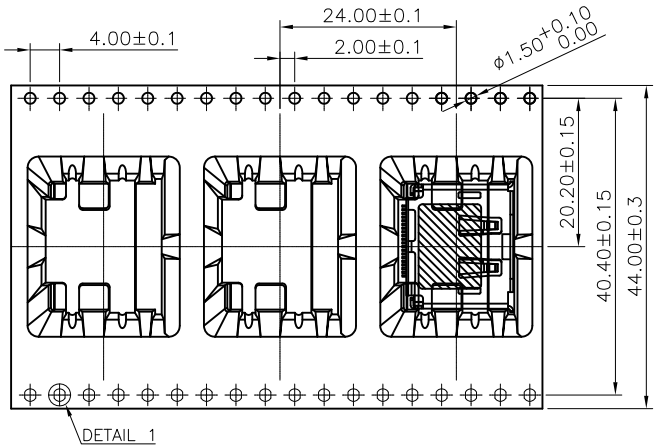

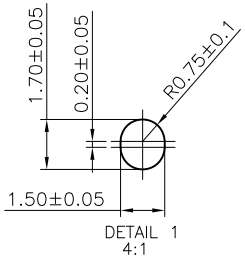

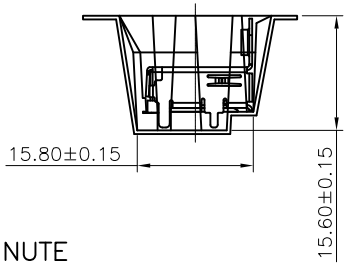

3FF02015510(F0313)

160	7	1120 PCS	--	--
PCS/ REEL	REELS/ CARTON	QUANTITY	GROSS WEIGHT	NET WEIGHT

NOTE:
1.PEELING SPEED: 300mm/MINUTE
2.PEELING RESISTANCE: 20g~120g
3.PEELING ANGLE: 165°~180°

設計驗證
工程課
2025 -03- 12
發行
鈺鐘科技開發股份有限公司

GENERAL TOLERANCE UNLESS OTHERWISE NOTED	
Angle	±5°
X.	±0.38
.X	±0.30
.XX	±0.25
.XXX	±0.10
A4	

德力康电子科技有限公司
DELIKANG ELECTRONICS TECHNOLOGY CO.,LTD

P	名称 TITLE:	DisplayPort SMT Type 带锁扣 9.58H 包装图			
档案名称 FILE NAME.	P-DPT2P-00-00		料号 PART NO:	DPT2PA-20BM4RN10	
DRAWING	邱 宇	CHECKED		APPROVED	
UNIT:	mm	SCALE	1:1	SHEET: 1 of 1	

PRODUCT SPECIFICATION

1.0 Applicable Connector: Applicable to DLK DP Series connector.

（适用于德力康公司 DP 系列连接器.）

Scope: This specification covers the requirements for product performance and test methods of DLK's DP Series Connectors of the part numbers specified as bellow.

（覆盖范围：此规格书内容含盖德力康公司 DP 系列连接器产品性能及测试方法.）

2.0 Rating：（要求）：

2.1 Contact Current Rating: 0.5Ampere.

（额定电流：0.5A）

2.2 Contact Voltage Rating: 40Volt.

（额定电压： 40V）

2.3 Operating Teperature: -20℃ to +85℃

（操作温度：-20℃ 至 +85℃）

3.0 Test Condition:

All tests shall be performed as bellow conditions unless otherwise specified.

（所有的测试都在下列条件下完成，除非另有说明.）

3.1Temperature range : 15℃~35℃

（ 温度：15℃~35℃）

3.2Humidity range: 20%~80%

（湿度：20%~80%）

3.3Atmospheric Pressure : 650 mm to 800 mm (866 to 1066mbar)

（大气压力：650 mm 至 800 mm (866 to 1066 兆帕)）

4.0 Test Methods and Requirements：（测试方法和要求）：

4.1 Mechanical Performance: （机械性能）：

Item（条目）	Test Description（测试内容）	Test Methods（测试方法）	Requirement（要求）
4.1.1	Visual Inspection（外观检查）	Before the qualification test, all these components shall be examined the Features, Construction as per applicable specification and documents.（在测试之前,对所有产品按照其规格和图面进行外观和尺寸检查。）ANSI/EIA-364-18	The inspection results should be compliant with the individual specification.（检验结果应符合规范。）
4.1.2	Insertion Force & Withdrawal Force（插入力/拔出力）	The specimen are mounted to mounting fixtures by the normal mounting means. The peak force shall be recorded at the max. rate of 25±3mm per minute.（将公座或母座焊接在 PC 板上，然后以每分钟 25±3mm 的速度沿轴向插拔 3 次后再测量其插入和拔出力）ANSI/EIA-364-13	Each specimen needs to be recorded three peak force of the mating & un mating movements.（每个样品需沿轴向插拔 3 次后再测量其插入和拔出力） Insert force（插入力）：4.5Kgf max Withdrawal Force (拔出力)：1.0~4.0Kgf
4.1.3	Durability（寿命测试）	Measure contact and shell resistance after the following. Automatic cycling: 10,000 cycles at a rate of 100+/-50cycles per hour.(将公座及母座焊接在 PCB 上，然后以每小时 100±50 次的速度沿轴向插拔 10000 次）ANSI/EIA-364-09	Contact: Change from initial value: 30 mΩ maximum. (端子：测试后不得大于 30 毫欧)

4.1.4	Vibration: （振动测试）	Ampliture:1.52mm P-P or 147m/s² {15G}, （振幅：1.52mm P-P or 147m/s² {15G}） Sweep time: 50-2000-50Hz in 20 minutes. （频率：20 分钟内变换 50-2000-50Hz） Duration: 12 times in each of X, Y, Z axes (Total of 36 times) (持续时间:X, Y, Z 轴各 12 次，共 36 次) Electrical load: DC 100 mA current must be conducted during the test. （电气负载:测试过程必须在直流电流 100 毫安中进行) ANSI/EIA-364-28	Appearance No damage （外观没有损坏）	
			Contact: Change from initial value:30 mΩ maximum. (端子:测试后不得大于 30 毫欧）	
			Discontinuity （断讯）	1 μ sec max. （不能超过 1 微秒）

5.1 Electrical Performance: （电气性能）

Item （条目）	Test Description （测试内容）	Test Methods （测试方法）	Requirement （要求）
5.1.1	Low Level Contact Resistance （接触阻抗）	Mated connectors, Contact: measured by dry circuit, 20m Volts max., and 10mA. (端子：将公母头对插后，在回路施加直流最大 20mV 10mA 的电流） ANSI/EIA-364-23	Contact: Change from initial value = 30 mΩ maximum (端子：接触阻抗最大不能超过 30 毫欧）
5.1.2	Insulation Resistance （绝缘阻抗）	Unmated connectors, apply 500 Volts DC between adjacent terminal and ground. （未对插的连接器，在相邻的端子间施加 DC 500V 1mA 的电流 1 分钟；） ANSI/EIA 364-21, Method302	Unmated: 100 MΩ minimum （未对插：最小为 100 兆欧）
5.1.3	Dielectric Strength Voltage （耐电压）	Unmated connectors, apply 500 Volts AC (RMS.) between adjacent terminal （未对插的连接器，在相邻的端子间施加 AC 500V 1mA 的电流 1 分钟；） ANSI/EIA 364-20, Method301	No Breakdown（没有损坏）

5.2 Environmental Performance: (环境性能)：

Item （条目）	Test Description （测试内容）	Test Methods （测试方法）	Requirement （要求）	
5.2.1	Salt Spray （盐水喷雾）	Place 48H in 5% salt water at 35 ℃ and wash with clean water (在温度 35℃、浓度为 5%的盐水中放置 48H 用清水冲洗后应无被氧化） EIA-364-26B2	Appearance （外观）	No damage 没有损坏 （锡脚镀锡区不作要求）
			After the Salt Spray test , The connectors no evidence of damage and shall meet the requirements of contact resistance: Contact Resistance:contact:value:30 mΩ.max.(Product only) (外观无损坏且需满足端子接触阻抗不得大于 30 毫欧）	
5.2.2	soldering resistance 耐焊接性	Place the connector on the P.C.Board,then immerse the solder pin up to the surface of the board in the solder bath at 260℃+2℃ for 10±0.5 seconds.（ANSI/EIA-364-52） (将连接器置于 PCB 上,然后将露出 PCB 板表面的 Pin 脚部分浸入 260+2℃的锡炉中 10±0.5 秒)	After the test , The connectors no evidence of damage and shall meet the requirements of contact resistance: Contact Resistance:contact:value:30 mΩ.max.(Product only) (外观无损坏且需满足端子接触阻抗不得大于 30 毫欧）	
5.2.3	Heat resistance (耐热性)	After being placed at a temperature of 85 ℃ for 96 hours and at room temperature for 2 hours, the electrical performance meets the Spec requirements (温度在 85℃的状态中放置 96H 后，在常温下放置 2H 后，电气性能满足 Spec 要求)	After the test , The connectors no evidence of damage and shall meet the requirements of contact resistance: Contact Resistance:contact:value:30 mΩ.max.(Product only) （外观无损坏且需满足端子接触阻抗不得大于 30 毫欧）	

5.2.4	Cold resistance (耐寒性)	After being placed at a temperature of -40 ℃ for 96 hours and at room temperature for 2 hours, the electrical performance meets the Spec requirements (温度在-40℃的的状态中放置 96H 后，在常温下放置 2H 后，电气性能满足 Spec 要求)	After the test , The connectors no evidence of damage and shall meet the requirements of contact resistance: Contact Resistance:contact:value:30 mΩ.max.(Product only) (外观无损坏且需满足端子接触阻抗不得大于 30 毫欧)
5.2.5	Humidity resistance (耐湿性)	After being placed at a temperature of 40 ±2℃and a humidity of 90～95％for 96 hours, and then placed at room temperature for 2 hours, the electrical performance meets the Spec requirements (温度 40±2℃，湿度 90～95%的状态中放置 96H 后，在常温下放置 2H 后，电气性能满足 Spec 要求)	After the test , The connectors no evidence of damage and shall meet the requirements of contact resistance: Contact Resistance:contact:value:30 mΩ.max.(Product only) (外观无损坏且需满足端子接触阻抗不得大于 30 毫欧)
5.2.6	Thermal Shock （冷热冲击）	10 cycles of: a)-55°C for 30 minutes b)+85°C for 30 minutes performed. (将连接器焊在 PCB 上后将其暴露在下列环境条件中循环 10 次: 置于–55℃±3℃温度中 30 分钟，再转换标准温度条件 10-15 分钟，再转换至+85℃±2℃下 30 分钟，再换至标准温度条件 10-15 分钟；） ANSI/EIA-364-32 Condition I	Appearance No damage (外观没有损坏) Contact: Change from initial value: 30 mΩ maximum. (端子：测试后不得大于 30 毫欧)

Test Report

No.: SHAEC24013601901 **Date:** Jun 28, 2024

Client Name: KUNSHAN DELIKANG ELECTRONIC TECHNOLOGY CO., LTD

Client Address: NO. 278, HUANGPU JIANGNAN ROAD,DIANSHAN LAKE TOWN,KUNSHAN CITY,JIANGSU PROVINCE

Sample Name: Plastic

Model No.: LCP BK

Supplier: Modeng

The above sample(s) and information were provided by the client.

SGS Job No.: SHP24-019514

Sample Receiving Date: Jun 21, 2024

Testing Period: Jun 21, 2024 ~ Jun 28, 2024

Test Requested: Select test(s) as requested by the client.

Test Method(s): Please refer to next page(s).

Test Result(s): Please refer to next page(s).

Test Requirement	Conclusion
EU RoHS Directive (EU) 2015/863 amending Annex II to Directive 2011/65/EU - Lead, Mercury, Cadmium, Hexavalent chromium, Polybrominated biphenyls (PBB), Polybrominated diphenyl ethers (PBDE), Bis(2-ethylhexyl) phthalate (DEHP), Butyl benzyl phthalate (BBP), Dibutyl phthalate (DBP) and Diisobutyl phthalate (DIBP)	Pass
Halogen	See Results
Red Phosphorus	See Results

Signed for and on behalf of
SGS-CSTC Standards Technical Services (Shanghai) Co., Ltd.

Jenny Lan
Approved Signatory

scan to see the report
C2D55C52

Unless otherwise agreed in writing, this document is issued by the Company subject to its General Conditions of Service printed overleaf, available on request or accessible at http://www.sgs.com/en/Terms-and-Conditions.aspx and, for electronic format documents, subject to Terms and Conditions for Electronic Documents at http://www.sgs.com/en/Terms-and-Conditions/Terms-e-Document.aspx. Attention is drawn to the limitation of liability, indemnification and jurisdiction issues defined therein. Any holder of this document is advised that information contained hereon reflects the Company's findings at the time of its intervention only and within the limits of Client's instructions, if any. The Company's sole responsibility is to its Client and this document does not exonerate parties to a transaction from exercising all their rights and obligations under the transaction documents. This document cannot be reproduced except in full, without prior written approval of the Company. Any unauthorized alteration, forgery or falsification of the content or appearance of this document is unlawful and offenders may be prosecuted to the fullest extent of the law. Unless otherwise stated the results shown in this test report refer only to the sample(s) tested.
Attention: To check the authenticity of testing /inspection report & certificate, please contact us at telephone: (86-755) 8307 1443, or email: CN.Doccheck@sgs.com

3rd Building,No.889 Yishan Road Xuhui District,Shanghai China 200233 t E&E (86-21) 61402553 f E&E (86-21)64953679 www.sgsgroup.com.cn
中国·上海·徐汇区宜山路889号3号楼 邮编: 200233 t HL (86-21) 61402594 f HL (86-21)61156899 e sgs.china@sgs.com

Test Result(s):

Test Part Description：

SN ID	Sample No.	SGS Sample ID	Description
SN1	A1	SHA24-0136019-0001.C001	Black pellet

Remarks:

(1) 1 mg/kg = 1 ppm = 0.0001%
(2) MDL = Method Detection Limit
(3) ND = Not Detected (< MDL)
(4) "-" = Not Regulated

EU RoHS Directive (EU) 2015/863 amending Annex II to Directive 2011/65/EU - Lead, Mercury, Cadmium, Hexavalent chromium, Polybrominated biphenyls (PBB), Polybrominated diphenyl ethers (PBDE), Bis(2-ethylhexyl) phthalate (DEHP), Butyl benzyl phthalate (BBP), Dibutyl phthalate (DBP) and Diisobutyl phthalate (DIBP)

Test Method: With reference to IEC 62321-4:2013+AMD1:2017, IEC 62321-5:2013, IEC 62321-7-2:2017, IEC 62321-6:2015 and IEC 62321-8:2017, analysis was performed by ICP-OES/AAS, UV-Vis and GC-MS.

Test Item(s)	Limit	Unit(s)	MDL	A1
Lead (Pb)	1000	mg/kg	2	ND
Mercury (Hg)	1000	mg/kg	2	ND
Cadmium (Cd)	100	mg/kg	2	ND
Hexavalent Chromium (Cr(VI))	1000	mg/kg	8	ND
Polybromobiphenyl (PBB)	1000	mg/kg	-	ND
Monobrominated biphenyl (MonoBB)	-	mg/kg	5	ND
Dibrominated biphenyl (DiBB)	-	mg/kg	5	ND
Tribrominated biphenyl (TriBB)	-	mg/kg	5	ND
Tetrabrominated biphenyl (TetraBB)	-	mg/kg	5	ND
Pentabrominated biphenyl (PentaBB)	-	mg/kg	5	ND
Hexabrominated biphenyl (HexaBB)	-	mg/kg	5	ND
Heptabrominated biphenyl (HeptaBB)	-	mg/kg	5	ND
Octabrominated biphenyl (OctaBB)	-	mg/kg	5	ND
Nonabrominated biphenyl (NonaBB)	-	mg/kg	5	ND
Decabrominated biphenyl (DecaBB)	-	mg/kg	5	ND
Polybromodiphenyl ether(PBDE)	1000	mg/kg	-	ND
Monobrominated diphenyl ether (MonoBDE)	-	mg/kg	5	ND
Dibrominated diphenyl ether (DiBDE)	-	mg/kg	5	ND
Tribrominated diphenyl ether (TriBDE)	-	mg/kg	5	ND
Tetrabrominated diphenyl ether (TetraBDE)	-	mg/kg	5	ND
Pentabrominated diphenyl ether (PentaBDE)	-	mg/kg	5	ND
Hexabrominated diphenyl ether (HexaBDE)	-	mg/kg	5	ND
Heptabrominated diphenyl ether (HeptaBDE)	-	mg/kg	5	ND

检验检测专用章 Inspection & Testing Services
SGS-CSTC Standards Technical Services (Shanghai) Co., Ltd. Testing Center-Chemical Laboratory

Unless otherwise agreed in writing, this document is issued by the Company subject to its General Conditions of Service printed overleaf, available on request or accessible at http://www.sgs.com/en/Terms-and-Conditions.aspx and, for electronic format documents, subject to Terms and Conditions for Electronic Documents at http://www.sgs.com/en/Terms-and-Conditions/Terms-e-Document.aspx. Attention is drawn to the limitation of liability, indemnification and jurisdiction issues defined therein. Any holder of this document is advised that information contained hereon reflects the Company's findings at the time of its intervention only and within the limits of Client's instructions, if any. The Company's sole responsibility is to its Client and this document does not exonerate parties to a transaction from exercising all their rights and obligations under the transaction documents. This document cannot be reproduced except in full, without prior written approval of the Company. Any unauthorized alteration, forgery or falsification of the content or appearance of this document is unlawful and offenders may be prosecuted to the fullest extent of the law. Unless otherwise stated the results shown in this test report refer only to the sample(s) tested.
Attention: To check the authenticity of testing /inspection report & certificate, please contact us at telephone: (86-755) 8307 1443, or email: CN.Doccheck@sgs.com
3rd Building,No.889 Yishan Road Xuhui District,Shanghai China 200233 t E&E (86-21) 61402553 f E&E (86-21)64953679 www.sgsgroup.com.cn
中国·上海·徐汇区宜山路889号3号楼 邮编: 200233 t HL (86-21) 61402594 f HL (86-21)61156899 e sgs.china@sgs.com
Member of the SGS Group (SGS SA)

Test Item(s)	Limit	Unit(s)	MDL	A1
Octabrominated diphenyl ether (OctaBDE)	-	mg/kg	5	ND
Nonabrominated diphenyl ether (NonaBDE)	-	mg/kg	5	ND
Decabrominated diphenyl ether (DecaBDE)	-	mg/kg	5	ND
Bis(2-ethylhexyl) phthalate (DEHP)	1000	mg/kg	50	ND
Butyl benzyl phthalate (BBP)	1000	mg/kg	50	ND
Dibutyl phthalate (DBP)	1000	mg/kg	50	ND
Diisobutyl phthalate (DIBP)	1000	mg/kg	50	ND

Notes:
(1) The maximum permissible limit is quoted from RoHS Directive (EU) 2015/863.
(2) IEC 62321 series is equivalent to EN 62321 series.
(3) The restriction of DEHP, BBP, DBP and DIBP shall apply to medical devices, including in vitro medical devices, and monitoring and control instruments, including industrial monitoring and control instruments, from 22 July 2021.

Halogen

Test Method: With reference to EN 14582:2016, analysis was performed by IC.

Test Item(s)	Unit(s)	MDL	A1
Fluorine(F)	mg/kg	20	607
Chlorine(Cl)	mg/kg	50	ND
Bromine(Br)	mg/kg	50	ND
Iodine(I)	mg/kg	50	ND

Red Phosphorus

Test Method: With reference to SGS In house method, analysis was performed by ICP-OES and Pyrolysis-GC-MS.

Test Item(s)	CAS No.	Unit(s)	MDL	A1
Red Phosphorus	7723-14-0	mg/kg	500	ND

Notes:
(1) The testing result is based on the worst-case scenario, and confirmed by Pyrolysis-GC-MS.

Unless otherwise stated, the decision rule for conformity reporting is based on Binary Statement for Simple Acceptance Rule (*w*=0) stated in ILAC-G8:09/2019.

Unless otherwise agreed in writing, this document is issued by the Company subject to its General Conditions of Service printed overleaf, available on request or accessible at http://www.sgs.com/en/Terms-and-Conditions.aspx and, for electronic format documents, subject to Terms and Conditions for Electronic Documents at http://www.sgs.com/en/Terms-and-Conditions/Terms-e-Document.aspx. Attention is drawn to the limitation of liability, indemnification and jurisdiction issues defined therein. Any holder of this document is advised that information contained hereon reflects the Company's findings at the time of its intervention only and within the limits of Client's instructions, if any. The Company's sole responsibility is to its Client and this document does not exonerate parties to a transaction from exercising all their rights and obligations under the transaction documents. This document cannot be reproduced except in full, without prior written approval of the Company. Any unauthorized alteration, forgery or falsification of the content or appearance of this document is unlawful and offenders may be prosecuted to the fullest extent of the law. Unless otherwise stated the results shown in this test report refer only to the sample(s) tested .
Attention: To check the authenticity of testing /inspection report & certificate, please contact us at telephone: (86-755) 8307 1443, or email: CN.Doccheck@sgs.com

SGS-CSTC Standards Technical Services (Shanghai) Co.,Ltd. Testing Center-Chemical Laboratory
3rd Building,No.889 Yishan Road Xuhui District,Shanghai China 200233 t E&E (86-21) 61402553 f E&E (86-21)64953679 www.sgsgroup.com.cn
中国·上海·徐汇区宜山路889号3号楼 邮编: 200233 t HL (86-21) 61402594 f HL (86-21)61156899 e sgs.china@sgs.com

ATTACHMENTS

Elements Testing Flow Chart

These samples were dissolved totally by pre-conditioning method according to below flow chart.

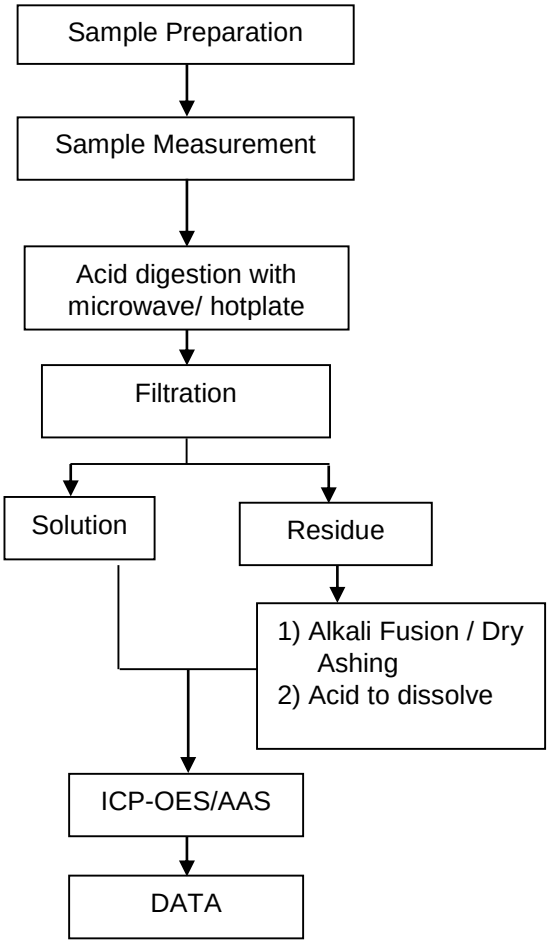

Unless otherwise agreed in writing, this document is issued by the Company subject to its General Conditions of Service printed overleaf, available on request or accessible at http://www.sgs.com/en/Terms-and-Conditions.aspx and, for electronic format documents, subject to Terms and Conditions for Electronic Documents at http://www.sgs.com/en/Terms-and-Conditions/Terms-e-Document.aspx. Attention is drawn to the limitation of liability, indemnification and jurisdiction issues defined therein. Any holder of this document is advised that information contained hereon reflects the Company's findings at the time of its intervention only and within the limits of Client's instructions, if any. The Company's sole responsibility is to its Client and this document does not exonerate parties to a transaction from exercising all their rights and obligations under the transaction documents. This document cannot be reproduced except in full, without prior written approval of the Company. Any unauthorized alteration, forgery or falsification of the content or appearance of this document is unlawful and offenders may be prosecuted to the fullest extent of the law. Unless otherwise stated the results shown in this test report refer only to the sample(s) tested .
Attention: To check the authenticity of testing /inspection report & certificate, please contact us at telephone: (86-755) 8307 1443, or email: CN.Doccheck@sgs.com

SGS-CSTC Standards Technical Services (Shanghai) Co., Ltd. Testing Center-Chemical Laboratory
3rd Building,No.889 Yishan Road Xuhui District,Shanghai China 200233 t E&E (86–21) 61402553 f E&E (86–21)64953679 www.sgsgroup.com.cn
中国·上海·徐汇区宜山路889号3号楼 邮编: 200233 t HL (86–21) 61402594 f HL (86–21)61156899 e sgs.china@sgs.com

Member of the SGS Group (SGS SA)

ATTACHMENTS

Hexavalent Chromium (Cr(VI)) Testing Flow Chart

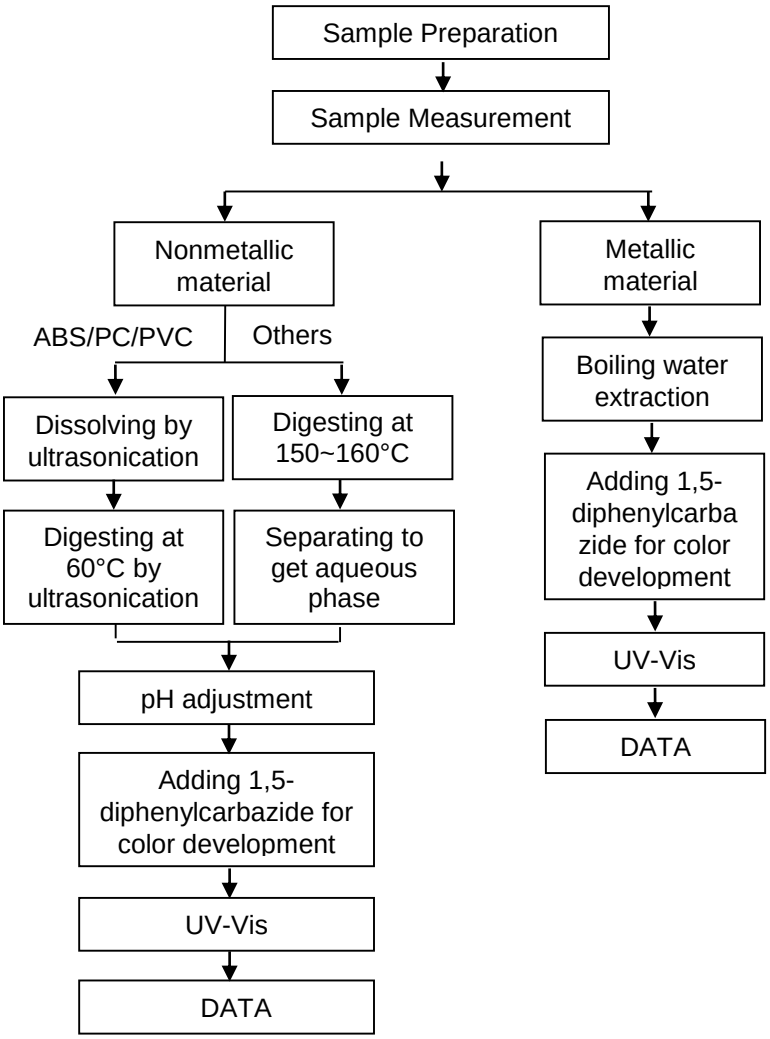

Unless otherwise agreed in writing, this document is issued by the Company subject to its General Conditions of Service printed overleaf, available on request or accessible at http://www.sgs.com/en/Terms-and-Conditions.aspx and, for electronic format documents, subject to Terms and Conditions for Electronic Documents at http://www.sgs.com/en/Terms-and-Conditions/Terms-e-Document.aspx. Attention is drawn to the limitation of liability, indemnification and jurisdiction issues defined therein. Any holder of this document is advised that information contained hereon reflects the Company's findings at the time of its intervention only and within the limits of Client's instructions, if any. The Company's sole responsibility is to its Client and this document does not exonerate parties to a transaction from exercising all their rights and obligations under the transaction documents. This document cannot be reproduced except in full, without prior written approval of the Company. Any unauthorized alteration, forgery or falsification of the content or appearance of this document is unlawful and offenders may be prosecuted to the fullest extent of the law. Unless otherwise stated the results shown in this test report refer only to the sample(s) tested .
Attention: To check the authenticity of testing /inspection report & certificate, please contact us at telephone: (86-755) 8307 1443, or email: CN.Doccheck@sgs.com
SGS-CSTC Standards Technical Services (Shanghai) Co., Ltd. Testing Center-Chemical Laboratory
3rd Building,No.889 Yishan Road Xuhui District,Shanghai China 200233 t E&E (86–21) 61402553 f E&E (86–21)64953679 www.sgsgroup.com.cn
中国·上海·徐汇区宜山路889号3号楼 邮编: 200233 t HL (86–21) 61402594 f HL (86–21)61156899 e sgs.china@sgs.com
Member of the SGS Group (SGS SA)

ATTACHMENTS

PBB/PBDE Testing Flow Chart

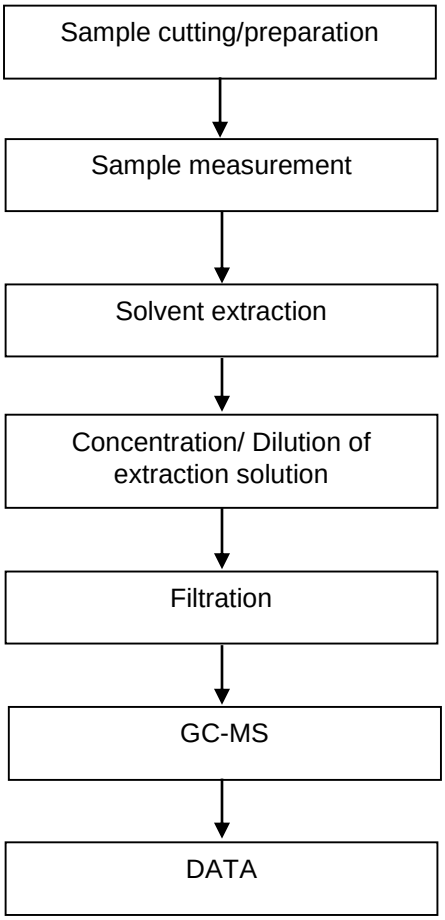

Unless otherwise agreed in writing, this document is issued by the Company subject to its General Conditions of Service printed overleaf, available on request or accessible at http://www.sgs.com/en/Terms-and-Conditions.aspx and, for electronic format documents, subject to Terms and Conditions for Electronic Documents at http://www.sgs.com/en/Terms-and-Conditions/Terms-e-Document.aspx. Attention is drawn to the limitation of liability, indemnification and jurisdiction issues defined therein. Any holder of this document is advised that information contained hereon reflects the Company's findings at the time of its intervention only and within the limits of Client's instructions, if any. The Company's sole responsibility is to its Client and this document does not exonerate parties to a transaction from exercising all their rights and obligations under the transaction documents. This document cannot be reproduced except in full, without prior written approval of the Company. Any unauthorized alteration, forgery or falsification of the content or appearance of this document is unlawful and offenders may be prosecuted to the fullest extent of the law. Unless otherwise stated the results shown in this test report refer only to the sample(s) tested .
Attention: To check the authenticity of testing /inspection report & certificate, please contact us at telephone: (86-755) 8307 1443, or email: CN.Doccheck@sgs.com
SGS-CSTC Standards Technical Services (Shanghai) Co.,Ltd. Testing Center-Chemical Laboratory
3rd Building,No.889 Yishan Road Xuhui District,Shanghai China 200233 t E&E (86–21) 61402553 f E&E (86–21)64953679 www.sgsgroup.com.cn
中国·上海·徐汇区宜山路889号3号楼 邮编: 200233 t HL (86–21) 61402594 f HL (86–21)61156899 e sgs.china@sgs.com
Member of the SGS Group (SGS SA)

ATTACHMENTS

Phthalates Testing Flow Chart

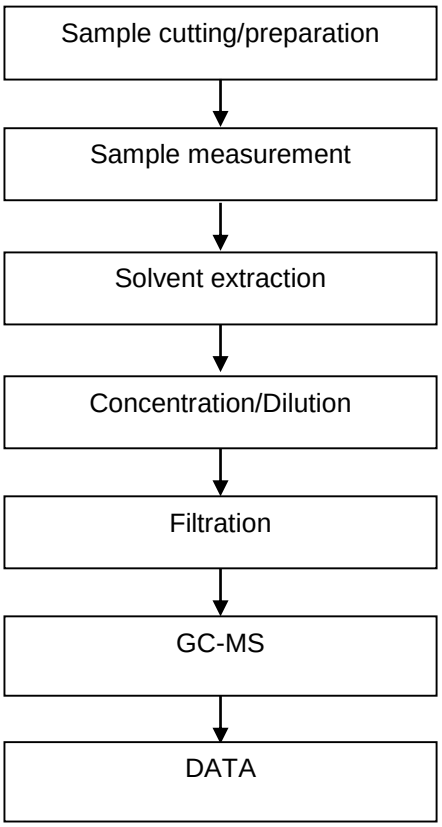

Unless otherwise agreed in writing, this document is issued by the Company subject to its General Conditions of Service printed overleaf, available on request or accessible at http://www.sgs.com/en/Terms-and-Conditions.aspx and, for electronic format documents, subject to Terms and Conditions for Electronic Documents at http://www.sgs.com/en/Terms-and-Conditions/Terms-e-Document.aspx. Attention is drawn to the limitation of liability, indemnification and jurisdiction issues defined therein. Any holder of this document is advised that information contained hereon reflects the Company's findings at the time of its intervention only and within the limits of Client's instructions, if any. The Company's sole responsibility is to its Client and this document does not exonerate parties to a transaction from exercising all their rights and obligations under the transaction documents. This document cannot be reproduced except in full, without prior written approval of the Company. Any unauthorized alteration, forgery or falsification of the content or appearance of this document is unlawful and offenders may be prosecuted to the fullest extent of the law. Unless otherwise stated the results shown in this test report refer only to the sample(s) tested .
Attention: To check the authenticity of testing /inspection report & certificate, please contact us at telephone: (86-755) 8307 1443, or email: CN.Doccheck@sgs.com
SGS-CSTC Standards Technical Services (Shanghai) Co.,Ltd. Testing Center-Chemical Laboratory
3rd Building,No.889 Yishan Road Xuhui District,Shanghai China 200233 t E&E (86–21) 61402553 f E&E (86–21)64953679 www.sgsgroup.com.cn
中国·上海·徐汇区宜山路889号3号楼 邮编: 200233 t HL (86–21) 61402594 f HL (86–21)61156899 e sgs.china@sgs.com
Member of the SGS Group (SGS SA)

ATTACHMENTS

Halogen Testing Flow Chart

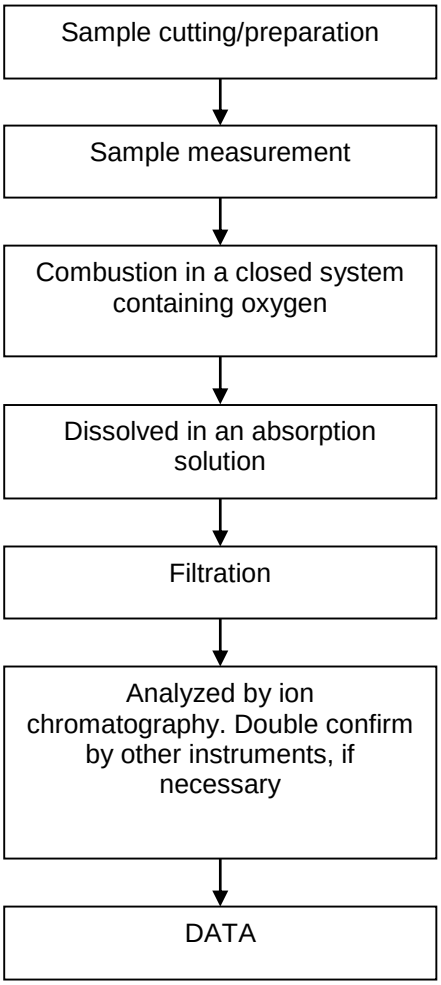

Unless otherwise agreed in writing, this document is issued by the Company subject to its General Conditions of Service printed overleaf, available on request or accessible at http://www.sgs.com/en/Terms-and-Conditions.aspx and, for electronic format documents, subject to Terms and Conditions for Electronic Documents at http://www.sgs.com/en/Terms-and-Conditions/Terms-e-Document.aspx. Attention is drawn to the limitation of liability, indemnification and jurisdiction issues defined therein. Any holder of this document is advised that information contained hereon reflects the Company's findings at the time of its intervention only and within the limits of Client's instructions, if any. The Company's sole responsibility is to its Client and this document does not exonerate parties to a transaction from exercising all their rights and obligations under the transaction documents. This document cannot be reproduced except in full, without prior written approval of the Company. Any unauthorized alteration, forgery or falsification of the content or appearance of this document is unlawful and offenders may be prosecuted to the fullest extent of the law. Unless otherwise stated the results shown in this test report refer only to the sample(s) tested .
Attention: To check the authenticity of testing /inspection report & certificate, please contact us at telephone: (86-755) 8307 1443, or email: CN.Doccheck@sgs.com

3rd Building,No.889 Yishan Road Xuhui District,Shanghai China 200233 t E&E (86–21) 61402553 f E&E (86–21)64953679 www.sgsgroup.com.cn
中国·上海·徐汇区宜山路889号3号楼 邮编: 200233 t HL (86–21) 61402594 f HL (86–21)61156899 e sgs.china@sgs.com

Member of the SGS Group (SGS SA)

ATTACHMENTS

Red Phosphorus Testing Flow Chart

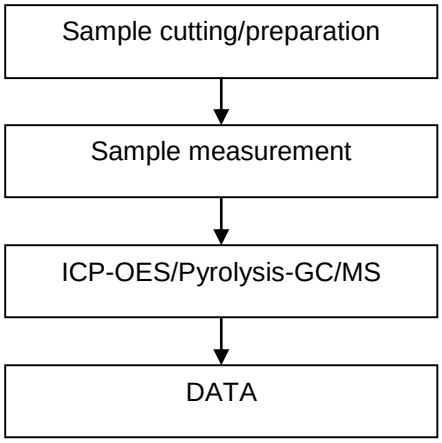

Unless otherwise agreed in writing, this document is issued by the Company subject to its General Conditions of Service printed overleaf, available on request or accessible at http://www.sgs.com/en/Terms-and-Conditions.aspx and, for electronic format documents, subject to Terms and Conditions for Electronic Documents at http://www.sgs.com/en/Terms-and-Conditions/Terms-e-Document.aspx. Attention is drawn to the limitation of liability, indemnification and jurisdiction issues defined therein. Any holder of this document is advised that information contained hereon reflects the Company's findings at the time of its intervention only and within the limits of Client's instructions, if any. The Company's sole responsibility is to its Client and this document does not exonerate parties to a transaction from exercising all their rights and obligations under the transaction documents. This document cannot be reproduced except in full, without prior written approval of the Company. Any unauthorized alteration, forgery or falsification of the content or appearance of this document is unlawful and offenders may be prosecuted to the fullest extent of the law. Unless otherwise stated the results shown in this test report refer only to the sample(s) tested .
Attention: To check the authenticity of testing /inspection report & certificate, please contact us at telephone: (86-755) 8307 1443, or email: CN.Doccheck@sgs.com
SGS-CSTC Standards Technical Services (Shanghai) Co.,Ltd. Testing Center-Chemical Laboratory
3rd Building,No.889 Yishan Road Xuhui District,Shanghai China 200233 t E&E (86–21) 61402553 f E&E (86–21)64953679 www.sgsgroup.com.cn
中国·上海·徐汇区宜山路889号3号楼 邮编: 200233 t HL (86–21) 61402594 f HL (86–21)61156899 e sgs.china@sgs.com
Member of the SGS Group (SGS SA)

Sample Photo:



SHA24-0136019-0001.C001

SGS authenticate the photo on original report only

*** End of Report ***

Unless otherwise agreed in writing, this document is issued by the Company subject to its General Conditions of Service printed overleaf, available on request or accessible at http://www.sgs.com/en/Terms-and-Conditions.aspx and, for electronic format documents, subject to Terms and Conditions for Electronic Documents at http://www.sgs.com/en/Terms-and-Conditions/Terms-e-Document.aspx. Attention is drawn to the limitation of liability, indemnification and jurisdiction issues defined therein. Any holder of this document is advised that information contained hereon reflects the Company's findings at the time of its intervention only and within the limits of Client's instructions, if any. The Company's sole responsibility is to its Client and this document does not exonerate parties to a transaction from exercising all their rights and obligations under the transaction documents. This document cannot be reproduced except in full, without prior written approval of the Company. Any unauthorized alteration, forgery or falsification of the content or appearance of this document is unlawful and offenders may be prosecuted to the fullest extent of the law. Unless otherwise stated the results shown in this test report refer only to the sample(s) tested .
Attention: To check the authenticity of testing /inspection report & certificate, please contact us at telephone: (86-755) 8307 1443, or email: CN.Doccheck@sgs.com

SGS-CSTC Standards Technical Services (Shanghai) Co.,Ltd. Testing Center-Chemical Laboratory.
3rd Building,No.889 Yishan Road Xuhui District,Shanghai China 200233 t E&E (86–21) 61402553 f E&E (86–21)64953679 www.sgsgroup.com.cn
中国·上海·徐汇区宜山路889号3号楼 邮编: 200233 t HL (86–21) 61402594 f HL (86–21)61156899 e sgs.china@sgs.com

Member of the SGS Group (SGS SA)

Test Report

No.: CANEC25002788913 **Date:** Feb 24, 2025

Client Name: GUANGZHOU COPPER MATERIALS CO., LTD.

Client Address: NO.5 LONGDONG ROAD, HIGH-TECH INDUSTRIAL PARK, CONGHUA GUANGDONG ECONOMIC DEVELOPMENT ZONE，GUANGZHOU CITY, GUANGDONG PROVINCE, CHINA

Sample Name: C2680

The above sample(s) and information were provided by the client.

SGS Job No.: GZP25-002672

Sample Receiving Date: Feb 18, 2025

Testing Period: Feb 18, 2025 ~ Feb 24, 2025

Test Requested: Select test(s) as requested by the client.

Test Method(s): Please refer to next page(s).

Test Result(s): Please refer to next page(s).

Test Requirement	Conclusion
EU RoHS Directive (EU) 2015/863 amending Annex II to Directive 2011/65/EU - Lead, Mercury, Cadmium, Hexavalent chromium, Polybrominated biphenyls (PBB), Polybrominated diphenyl ethers (PBDE), Bis(2-ethylhexyl) phthalate (DEHP), Butyl benzyl phthalate (BBP), Dibutyl phthalate (DBP) and Diisobutyl phthalate (DIBP)	Pass

Signed for and on behalf of
SGS-CSTC Standards Technical Services Co., Ltd. Guangzhou Branch

Dongyu Xie
Approved Signatory

Scan to see the report

224E5843

Unless otherwise agreed in writing, this document is issued by the Company subject to its General Conditions of Service printed overleaf, available on request or accessible at https://www.sgs.com/en/Terms-and-Conditions. Attention is drawn to the limitation of liability, indemnification and jurisdiction issues defined therein. Any holder of this document is advised that information contained hereon reflects the Company's findings at the time of its intervention only and within the limits of Client's instructions, if any. The Company's sole responsibility is to its Client and this document does not exonerate parties to a transaction from exercising all their rights and obligations under the transaction documents. This document cannot be reproduced except in full, without prior written approval of the Company. Any unauthorized alteration, forgery or falsification of the content or appearance of this document is unlawful and offenders may be prosecuted to the fullest extent of the law. Unless otherwise stated the results shown in this test report refer only to the sample(s) tested.
Attention: To check the authenticity of testing /inspection report & certificate, please contact us at telephone: (86-755) 8307 1443, or email: CN.Doccheck@sgs.com

SGS-CSTC Standards Technical Services Co., Ltd. Guangzhou Branch Technical Services Technical Laboratory.
No.198, Kezhu Road, Science City, Economic & Technological Development Area, Guangzhou, Guangdong, China 510663 t (86-20) 82155555 www.sgsgroup.com.cn
中国·广东·广州高新技术产业开发区科学城科珠路198号 邮编: 510663 t (86-20) 82155555 sgs.china@sgs.com

Test Result(s):

Test Part Description：

SN ID	Sample No.	SGS Sample ID	Description
SN1	A7	CAN25-0027889-0001.C007	Golden metal sheet

Remarks:

(1) 1 mg/kg = 1 ppm = 0.0001%
(2) MDL = Method Detection Limit
(3) ND = Not Detected (< MDL)
(4) "-" = Not Regulated

EU RoHS Directive (EU) 2015/863 amending Annex II to Directive 2011/65/EU - Lead, Mercury, Cadmium, Hexavalent chromium, Polybrominated biphenyls (PBB), Polybrominated diphenyl ethers (PBDE), Bis(2-ethylhexyl) phthalate (DEHP), Butyl benzyl phthalate (BBP), Dibutyl phthalate (DBP) and Diisobutyl phthalate (DIBP)

Test Method: With reference to IEC 62321-4:2013+AMD1:2017, IEC 62321-5:2013, IEC 62321-7-1:2015 and IEC 62321-12:2023, analysis was performed by ICP-OES/AAS, UV-Vis and GC-MS.

Test Item(s)	Limit	Unit(s)	MDL	A7
Lead (Pb)	1000	mg/kg	2	35
Mercury (Hg)	1000	mg/kg	2	ND
Cadmium (Cd)	100	mg/kg	2	ND
Hexavalent Chromium (Cr(VI))▼	-	µg/cm²	0.10	ND
Polybrominated biphenyls (PBB)	1000	mg/kg	-	ND
Monobrominated biphenyl (MonoBB)	-	mg/kg	25	ND
Dibrominated biphenyl (DiBB)	-	mg/kg	25	ND
Tribrominated biphenyl (TriBB)	-	mg/kg	25	ND
Tetrabrominated biphenyl (TetraBB)	-	mg/kg	25	ND
Pentabrominated biphenyl (PentaBB)	-	mg/kg	25	ND
Hexabrominated biphenyl (HexaBB)	-	mg/kg	25	ND
Heptabrominated biphenyl (HeptaBB)	-	mg/kg	25	ND
Octabrominated biphenyl (OctaBB)	-	mg/kg	25	ND
Nonabrominated biphenyl (NonaBB)	-	mg/kg	25	ND
Decabrominated biphenyl (DecaBB)	-	mg/kg	25	ND
Polybrominated diphenyl ethers (PBDE)	1000	mg/kg	-	ND
Monobrominated diphenyl ether (MonoBDE)	-	mg/kg	25	ND
Dibrominated diphenyl ether (DiBDE)	-	mg/kg	25	ND
Tribrominated diphenyl ether (TriBDE)	-	mg/kg	25	ND
Tetrabrominated diphenyl ether (TetraBDE)	-	mg/kg	25	ND
Pentabrominated diphenyl ether (PentaBDE)	-	mg/kg	25	ND
Hexabrominated diphenyl ether (HexaBDE)	-	mg/kg	25	ND
Heptabrominated diphenyl ether (HeptaBDE)	-	mg/kg	25	ND

SGS-CSTC Standards Technical Services Co., Ltd. Guangzhou Branch Technical Services Chemical Laboratory
检验检测专用章 Inspection & Testing Services

Unless otherwise agreed in writing, this document is issued by the Company subject to its General Conditions of Service printed overleaf, available on request or accessible at https://www.sgs.com/en/Terms-and-Conditions. Attention is drawn to the limitation of liability, indemnification and jurisdiction issues defined therein. Any holder of this document is advised that information contained hereon reflects the Company's findings at the time of its intervention only and within the limits of Client's instructions, if any. The Company's sole responsibility is to its Client and this document does not exonerate parties to a transaction from exercising all their rights and obligations under the transaction documents. This document cannot be reproduced except in full, without prior written approval of the Company. Any unauthorized alteration, forgery or falsification of the content or appearance of this document is unlawful and offenders may be prosecuted to the fullest extent of the law. Unless otherwise stated the results shown in this test report refer only to the sample(s) tested.
Attention: To check the authenticity of testing /inspection report & certificate, please contact us at telephone: (86-755) 8307 1443, or email: CN.Doccheck@sgs.com

No.198, Kezhu Road, Science City, Economic & Technological Development Area, Guangzhou, Guangdong, China 510663 t (86-20) 82155555 www.sgsgroup.com.cn
中国·广东·广州高新技术产业开发区科学城科珠路198号 邮编: 510663 t (86-20) 82155555 sgs.china@sgs.com

Test Item(s)	Limit	Unit(s)	MDL	A7
Octabrominated diphenyl ether (OctaBDE)	-	mg/kg	25	ND
Nonabrominated diphenyl ether (NonaBDE)	-	mg/kg	25	ND
Decabrominated diphenyl ether (DecaBDE)	-	mg/kg	25	ND
Bis(2-ethylhexyl) phthalate (DEHP)	1000	mg/kg	50	ND
Butyl benzyl phthalate (BBP)	1000	mg/kg	50	ND
Dibutyl Phthalate (DBP)	1000	mg/kg	50	ND
Diisobutyl Phthalate (DIBP)	1000	mg/kg	50	ND

Notes:

(1) The maximum permissible limit is quoted from RoHS Directive (EU) 2015/863.

(2) IEC 62321 series is equivalent to EN 62321 series.

(3) ▼ =
a. The sample is positive for Cr(VI) if the Cr(VI)concentration is greater than 0.13 μg/cm^2. The sample coating is considered to contain Cr(VI).
b. The sample is negative for Cr(VI) if Cr(VI) is ND (concentration less than 0.10 μg/cm^2). The coating is considered a non-Cr(VI) based coating.
c. The result between 0.10 μg/cm^2 and 0.13 μg/cm^2 is considered to be inconclusive-unavoidable coating variations may influence the determination.

Information on storage conditions and production date of the tested sample is unavailable and thus Cr(VI) results represent status of the sample at the time of testing.

Unless otherwise stated, the decision rule for conformity reporting is based on Binary Statement for Simple Acceptance Rule (*w*=0) stated in ILAC-G8:09/2019.

SGS-CSTC Standards Technical Services Co., Ltd. Guangzhou Branch Testing Center Chemical Laboratory
检验检测专用章 Inspection & Testing Services

Unless otherwise agreed in writing, this document is issued by the Company subject to its General Conditions of Service printed overleaf, available on request or accessible at https://www.sgs.com/en/Terms-and-Conditions. Attention is drawn to the limitation of liability, indemnification and jurisdiction issues defined therein. Any holder of this document is advised that information contained hereon reflects the Company's findings at the time of its intervention only and within the limits of Client's instructions, if any. The Company's sole responsibility is to its Client and this document does not exonerate parties to a transaction from exercising all their rights and obligations under the transaction documents. This document cannot be reproduced except in full, without prior written approval of the Company. Any unauthorized alteration, forgery or falsification of the content or appearance of this document is unlawful and offenders may be prosecuted to the fullest extent of the law. Unless otherwise stated the results shown in this test report refer only to the sample(s) tested.
Attention: To check the authenticity of testing /inspection report & certificate, please contact us at telephone: (86-755) 8307 1443, or email: CN.Doccheck@sgs.com

No.198, Kezhu Road, Science City, Economic & Technological Development Area, Guangzhou, Guangdong, China 510663 t (86–20) 82155555 www.sgsgroup.com.cn
中国·广东·广州高新技术产业开发区科学城科珠路198号 邮编: 510663 t (86–20) 82155555 sgs.china@sgs.com

ATTACHMENTS

Elements Testing Flow Chart

These samples were dissolved totally by pre-conditioning method according to below flow chart.

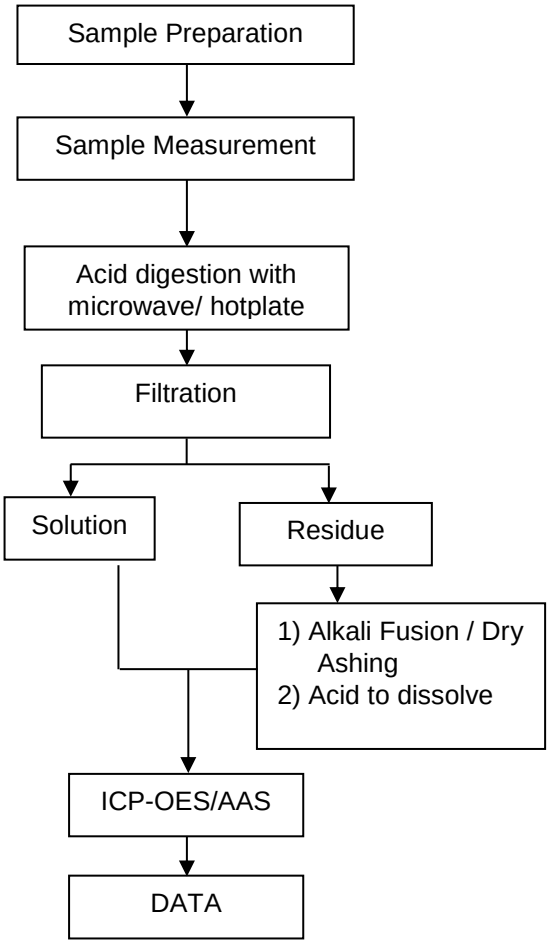

Unless otherwise agreed in writing, this document is issued by the Company subject to its General Conditions of Service printed overleaf, available on request or accessible at https://www.sgs.com/en/Terms-and-Conditions. Attention is drawn to the limitation of liability, indemnification and jurisdiction issues defined therein. Any holder of this document is advised that information contained hereon reflects the Company's findings at the time of its intervention only and within the limits of Client's instructions, if any. The Company's sole responsibility is to its Client and this document does not exonerate parties to a transaction from exercising all their rights and obligations under the transaction documents. This document cannot be reproduced except in full, without prior written approval of the Company. Any unauthorized alteration, forgery or falsification of the content or appearance of this document is unlawful and offenders may be prosecuted to the fullest extent of the law. Unless otherwise stated the results shown in this test report refer only to the sample(s) tested.
Attention: To check the authenticity of testing /inspection report & certificate, please contact us at telephone: (86-755) 8307 1443, or email: CN.Doccheck@sgs.com

SGS-CSTC Standards Technical Services Co., Ltd. Guangzhou Branch Technical Services Co., Ltd. Chemical Laboratory.
No.198, Kezhu Road, Science City, Economic & Technological Development Area, Guangzhou, Guangdong, China 510663 t (86-20) 82155555 www.sgsgroup.com.cn
中国·广东·广州高新技术产业开发区科学城科珠路198号 邮编: 510663 t (86-20) 82155555 sgs.china@sgs.com

ATTACHMENTS

Hexavalent Chromium (Cr(VI)) Testing Flow Chart

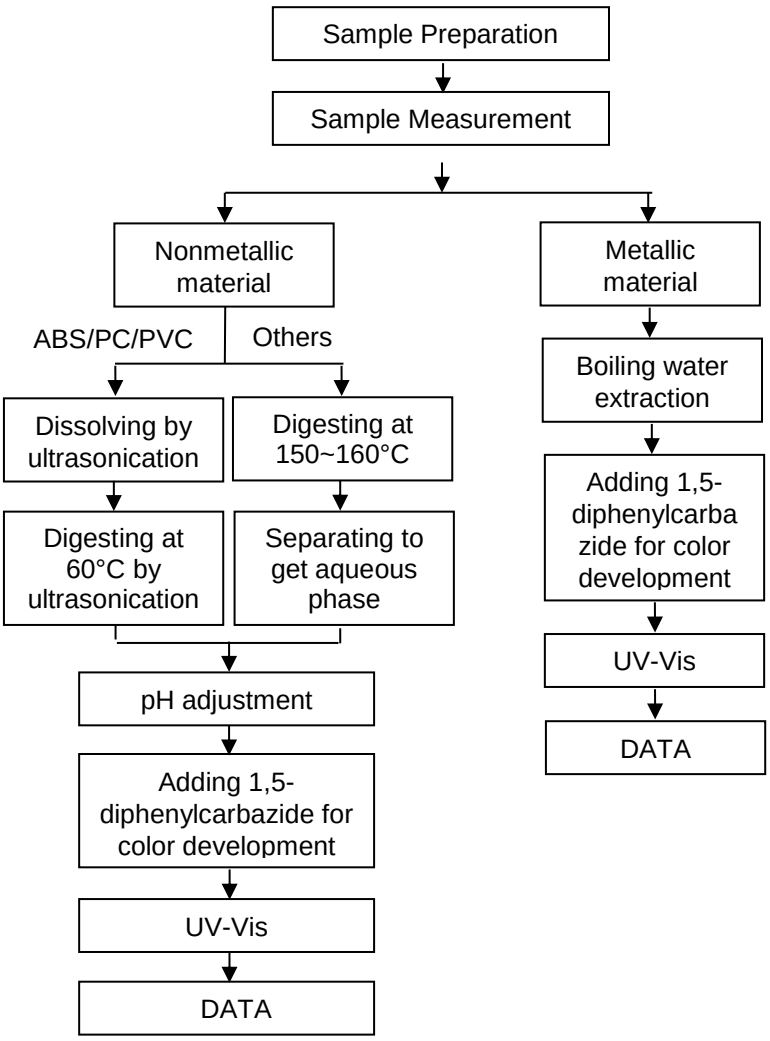

Unless otherwise agreed in writing, this document is issued by the Company subject to its General Conditions of Service printed overleaf, available on request or accessible at https://www.sgs.com/en/Terms-and-Conditions. Attention is drawn to the limitation of liability, indemnification and jurisdiction issues defined therein. Any holder of this document is advised that information contained hereon reflects the Company's findings at the time of its intervention only and within the limits of Client's instructions, if any. The Company's sole responsibility is to its Client and this document does not exonerate parties to a transaction from exercising all their rights and obligations under the transaction documents. This document cannot be reproduced except in full, without prior written approval of the Company. Any unauthorized alteration, forgery or falsification of the content or appearance of this document is unlawful and offenders may be prosecuted to the fullest extent of the law. Unless otherwise stated the results shown in this test report refer only to the sample(s) tested.
Attention: To check the authenticity of testing /inspection report & certificate, please contact us at telephone: (86-755) 8307 1443, or email: CN.Doccheck@sgs.com

SGS-CSTC Standards Technical Services Co., Ltd. Guangzhou Branch Technical Services Co., Ltd. Chemical Laboratory.
No.198, Kezhu Road, Science City, Economic & Technological Development Area, Guangzhou, Guangdong, China 510663 t (86-20) 82155555 www.sgsgroup.com.cn
中国·广东·广州高新技术产业开发区科学城科珠路198号 邮编: 510663 t (86-20) 82155555 sgs.china@sgs.com

ATTACHMENTS

PBB/PBDE/Phthalates Testing Flow Chart

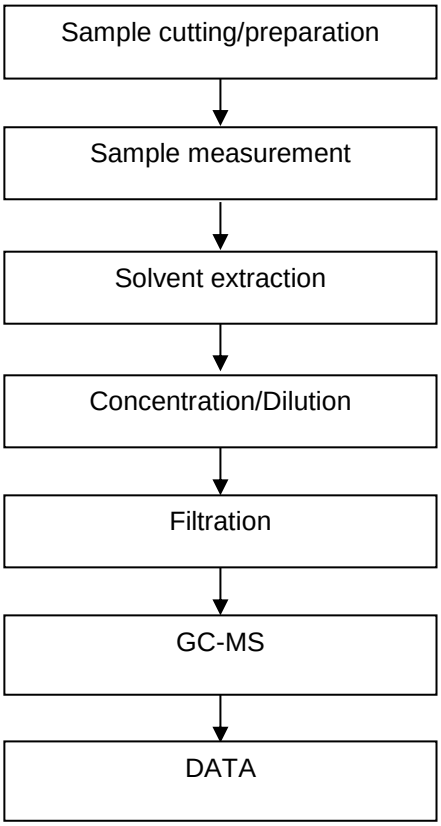

Unless otherwise agreed in writing, this document is issued by the Company subject to its General Conditions of Service printed overleaf, available on request or accessible at https://www.sgs.com/en/Terms-and-Conditions. Attention is drawn to the limitation of liability, indemnification and jurisdiction issues defined therein. Any holder of this document is advised that information contained hereon reflects the Company's findings at the time of its intervention only and within the limits of Client's instructions, if any. The Company's sole responsibility is to its Client and this document does not exonerate parties to a transaction from exercising all their rights and obligations under the transaction documents. This document cannot be reproduced except in full, without prior written approval of the Company. Any unauthorized alteration, forgery or falsification of the content or appearance of this document is unlawful and offenders may be prosecuted to the fullest extent of the law. Unless otherwise stated the results shown in this test report refer only to the sample(s) tested.
Attention: To check the authenticity of testing /inspection report & certificate, please contact us at telephone: (86-755) 8307 1443, or email: CN.Doccheck@sgs.com

SGS-CSTC Standards Technical Services Co., Ltd. Guangzhou Branch Technical Service Chemical Laboratory.
No.198, Kezhu Road, Science City, Economic & Technological Development Area, Guangzhou, Guangdong, China 510663 t (86-20) 82155555 www.sgsgroup.com.cn
中国·广东·广州高新技术产业开发区科学城科珠路198号 邮编: 510663 t (86-20) 82155555 sgs.china@sgs.com

Sample Photo:



CAN25-0027889-0001.C007

SGS authenticate the photo on original report only

*** End of Report ***

检验检测专用章 Inspection & Testing Services
SGS-CSTC Standards Technical Services Co., Ltd. Guangzhou Branch Testing Center / Chemical Laboratory.

Unless otherwise agreed in writing, this document is issued by the Company subject to its General Conditions of Service printed overleaf, available on request or accessible at https://www.sgs.com/en/Terms-and-Conditions. Attention is drawn to the limitation of liability, indemnification and jurisdiction issues defined therein. Any holder of this document is advised that information contained hereon reflects the Company's findings at the time of its intervention only and within the limits of Client's instructions, if any. The Company's sole responsibility is to its Client and this document does not exonerate parties to a transaction from exercising all their rights and obligations under the transaction documents. This document cannot be reproduced except in full, without prior written approval of the Company. Any unauthorized alteration, forgery or falsification of the content or appearance of this document is unlawful and offenders may be prosecuted to the fullest extent of the law. Unless otherwise stated the results shown in this test report refer only to the sample(s) tested.
Attention: To check the authenticity of testing /inspection report & certificate, please contact us at telephone: (86-755) 8307 1443, or email: CN.Doccheck@sgs.com

No.198, Kezhu Road, Science City, Economic & Technological Development Area, Guangzhou, Guangdong, China 510663 t (86–20) 82155555 www.sgsgroup.com.cn
中国·广东·广州高新技术产业开发区科学城科珠路198号 邮编: 510663 t (86–20) 82155555 sgs.china@sgs.com

Member of the SGS Group (SGS SA)

Test Report

No.: SHAEC24013616009 **Date:** Jun 27, 2024

Client Name: Xuancheng Changfeng Electroplating Technology Co., Ltd.

Client Address: No. 16 Jinniu Xi Road, Langxi County Economic Development Zone, Xuancheng, Anhui

Sample Name: Plating

Model No.: Fog tin plating

Supplier: CHANGFENG

The above sample(s) and information were provided by the client.

SGS Job No.: SHP24-019514

Sample Receiving Date: Jun 21, 2024

Testing Period: Jun 21, 2024 ~ Jun 25, 2024

Test Requested: Select test(s) as requested by the client.

Test Method(s): Please refer to next page(s).

Test Result(s): Please refer to next page(s).

Test Requirement	Conclusion
EU RoHS Directive (EU) 2015/863 amending Annex II to Directive 2011/65/EU - Lead, Mercury, Cadmium, Hexavalent chromium, Polybrominated biphenyls (PBB), Polybrominated diphenyl ethers (PBDE), Bis(2-ethylhexyl) phthalate (DEHP), Butyl benzyl phthalate (BBP), Dibutyl phthalate (DBP) and Diisobutyl phthalate (DIBP)	Pass

Signed for and on behalf of
SGS-CSTC Standards Technical Services (Shanghai) Co., Ltd.

Carol Luo

Carol Luo
Approved Signatory

scan to see the report

04E0E014

Unless otherwise agreed in writing, this document is issued by the Company subject to its General Conditions of Service printed overleaf, available on request or accessible at http://www.sgs.com/en/Terms-and-Conditions.aspx and, for electronic format documents, subject to Terms and Conditions for Electronic Documents at http://www.sgs.com/en/Terms-and-Conditions/Terms-e-Document.aspx. Attention is drawn to the limitation of liability, indemnification and jurisdiction issues defined therein. Any holder of this document is advised that information contained hereon reflects the Company's findings at the time of its intervention only and within the limits of Client's instructions, if any. The Company's sole responsibility is to its Client and this document does not exonerate parties to a transaction from exercising all their rights and obligations under the transaction documents. This document cannot be reproduced except in full, without prior written approval of the Company. Any unauthorized alteration, forgery or falsification of the content or appearance of this document is unlawful and offenders may be prosecuted to the fullest extent of the law. Unless otherwise stated the results shown in this test report refer only to the sample(s) tested.
Attention: To check the authenticity of testing /inspection report & certificate, please contact us at telephone: (86-755) 8307 1443, or email: CN.Doccheck@sgs.com

3rd Building,No.889 Yishan Road Xuhui District,Shanghai China 200233 t E&E (86-21) 61402553 f E&E (86-21)64953679 www.sgsgroup.com.cn
中国·上海·徐汇区宜山路889号3号楼 邮编: 200233 t HL (86-21) 61402594 f HL (86-21)61156899 e sgs.china@sgs.com

Test Result(s):

Test Part Description：

SN ID	Sample No.	SGS Sample ID	Description
SN1	A48	SHA24-0136160-0001.C048	Silver plating

Remarks:

(1) 1 mg/kg = 1 ppm = 0.0001%
(2) MDL = Method Detection Limit
(3) ND = Not Detected (< MDL)
(4) "-" = Not Regulated

EU RoHS Directive (EU) 2015/863 amending Annex II to Directive 2011/65/EU - Lead, Mercury, Cadmium, Hexavalent chromium, Polybrominated biphenyls (PBB), Polybrominated diphenyl ethers (PBDE), Bis(2-ethylhexyl) phthalate (DEHP), Butyl benzyl phthalate (BBP), Dibutyl phthalate (DBP) and Diisobutyl phthalate (DIBP)

Test Method: With reference to IEC 62321-4:2013+AMD1:2017, IEC 62321-5:2013, IEC 62321-7-1:2015， IEC 62321-6:2015 and IEC 62321-8:2017, analysis was performed by ICP-OES, UV-Vis and GC-MS.

Test Item(s)	Limit	Unit(s)	MDL	A48
Cadmium(Cd)	100	mg/kg	10	ND
Lead (Pb)	1000	mg/kg	10	27
Mercury (Hg)	1000	mg/kg	10	ND
Hexavalent Chromium (Cr(VI))▼	-	μg/cm²	0.10	ND
Polybromobiphenyl (PBB)	1000	mg/kg	-	ND
Monobrominated biphenyl (MonoBB)	-	mg/kg	5	ND
Dibrominated biphenyl (DiBB)	-	mg/kg	5	ND
Tribrominated biphenyl (TriBB)	-	mg/kg	5	ND
Tetrabrominated biphenyl (TetraBB)	-	mg/kg	5	ND
Pentabrominated biphenyl (PentaBB)	-	mg/kg	5	ND
Hexabrominated biphenyl (HexaBB)	-	mg/kg	5	ND
Heptabrominated biphenyl (HeptaBB)	-	mg/kg	5	ND
Octabrominated biphenyl (OctaBB)	-	mg/kg	5	ND
Nonabrominated biphenyl (NonaBB)	-	mg/kg	5	ND
Decabrominated biphenyl (DecaBB)	-	mg/kg	5	ND
Polybromodiphenyl ether(PBDE)	1000	mg/kg	-	ND
Monobrominated diphenyl ether (MonoBDE)	-	mg/kg	5	ND
Dibrominated diphenyl ether (DiBDE)	-	mg/kg	5	ND
Tribrominated diphenyl ether (TriBDE)	-	mg/kg	5	ND
Tetrabrominated diphenyl ether (TetraBDE)	-	mg/kg	5	ND
Pentabrominated diphenyl ether (PentaBDE)	-	mg/kg	5	ND
Hexabrominated diphenyl ether (HexaBDE)	-	mg/kg	5	ND
Heptabrominated diphenyl ether (HeptaBDE)	-	mg/kg	5	ND

Unless otherwise agreed in writing, this document is issued by the Company subject to its General Conditions of Service printed overleaf, available on request or accessible at http://www.sgs.com/en/Terms-and-Conditions.aspx and, for electronic format documents, subject to Terms and Conditions for Electronic Documents at http://www.sgs.com/en/Terms-and-Conditions/Terms-e-Document.aspx. Attention is drawn to the limitation of liability, indemnification and jurisdiction issues defined therein. Any holder of this document is advised that information contained hereon reflects the Company's findings at the time of its intervention only and within the limits of Client's instructions, if any. The Company's sole responsibility is to its Client and this document does not exonerate parties to a transaction from exercising all their rights and obligations under the transaction documents. This document cannot be reproduced except in full, without prior written approval of the Company. Any unauthorized alteration, forgery or falsification of the content or appearance of this document is unlawful and offenders may be prosecuted to the fullest extent of the law. Unless otherwise stated the results shown in this test report refer only to the sample(s) tested .
Attention: To check the authenticity of testing /inspection report & certificate, please contact us at telephone: (86-755) 8307 1443, or email: CN.Doccheck@sgs.com

SGS-CSTC Standards Technical Services (Shanghai) Co., Ltd. Testing Center-Chemical Laboratory
3rd Building,No.889 Yishan Road Xuhui District,Shanghai China 200233 t E&E (86–21) 61402553 f E&E (86–21)64953679 www.sgsgroup.com.cn
中国·上海·徐汇区宜山路889号3号楼 邮编: 200233 t HL (86–21) 61402594 f HL (86–21)61156899 e sgs.china@sgs.com

Test Item(s)	Limit	Unit(s)	MDL	A48
Octabrominated diphenyl ether (OctaBDE)	-	mg/kg	5	ND
Nonabrominated diphenyl ether (NonaBDE)	-	mg/kg	5	ND
Decabrominated diphenyl ether (DecaBDE)	-	mg/kg	5	ND
Dibutyl phthalate (DBP)	1000	mg/kg	50	ND
Butyl benzyl phthalate (BBP)	1000	mg/kg	50	ND
Bis(2-ethylhexyl) phthalate (DEHP)	1000	mg/kg	50	ND
Diisobutyl phthalate (DIBP)	1000	mg/kg	50	ND

Notes:

(1) The maximum permissible limit is quoted from RoHS Directive (EU) 2015/863.

(2) IEC 62321 series is equivalent to EN 62321 series.

(3) ▼ = a. The sample is positive for Cr(VI) if the Cr(VI)concentration is greater than 0.13 μg/cm2. The sample coating is considered to contain Cr(VI)

b. The sample is negative for Cr(VI) if Cr(VI) is ND (concentration less than 0.10 μg/cm2). The coating is considered a non-Cr(VI) based coating

c. The result between 0.10 μg/cm2 and 0.13 μg/cm2 is considered to be inconclusive - unavoidable coating variations may influence the determination

Information on storage conditions and production date of the tested sample is unavailable and thus Cr(VI) results represent status of the sample at the time of testing.

(4) The results of PBBs, PBDEs, DBP, BBP, DEHP & DIBP are based on the complete samples submitted by the client, including plating and substrate.

Results & photo(s) of this report refer to test report SHAEC24013616004

Unless otherwise stated, the decision rule for conformity reporting is based on Binary Statement for Simple Acceptance Rule (*w*=0) stated in ILAC-G8:09/2019.

检验检测专用章 Inspection & Testing Services

SGS-CSTC Standards Technical Services (Shanghai) Co.,Ltd. Testing Center-Chemical Laboratory

Unless otherwise agreed in writing, this document is issued by the Company subject to its General Conditions of Service printed overleaf, available on request or accessible at http://www.sgs.com/en/Terms-and-Conditions.aspx and, for electronic format documents, subject to Terms and Conditions for Electronic Documents at http://www.sgs.com/en/Terms-and-Conditions/Terms-e-Document.aspx. Attention is drawn to the limitation of liability, indemnification and jurisdiction issues defined therein. Any holder of this document is advised that information contained hereon reflects the Company's findings at the time of its intervention only and within the limits of Client's instructions, if any. The Company's sole responsibility is to its Client and this document does not exonerate parties to a transaction from exercising all their rights and obligations under the transaction documents. This document cannot be reproduced except in full, without prior written approval of the Company. Any unauthorized alteration, forgery or falsification of the content or appearance of this document is unlawful and offenders may be prosecuted to the fullest extent of the law. Unless otherwise stated the results shown in this test report refer only to the sample(s) tested .

Attention: To check the authenticity of testing /inspection report & certificate, please contact us at telephone: (86-755) 8307 1443, or email: CN.Doccheck@sgs.com

3rd Building,No.889 Yishan Road Xuhui District,Shanghai China 200233 t E&E (86–21) 61402553 f E&E (86–21)64953679 www.sgsgroup.com.cn

中国·上海·徐汇区宜山路889号3号楼 邮编: 200233 t HL (86–21) 61402594 f HL (86–21)61156899 e sgs.china@sgs.com

Member of the SGS Group (SGS SA)

ATTACHMENTS

Plating Element Testing Flow Chart

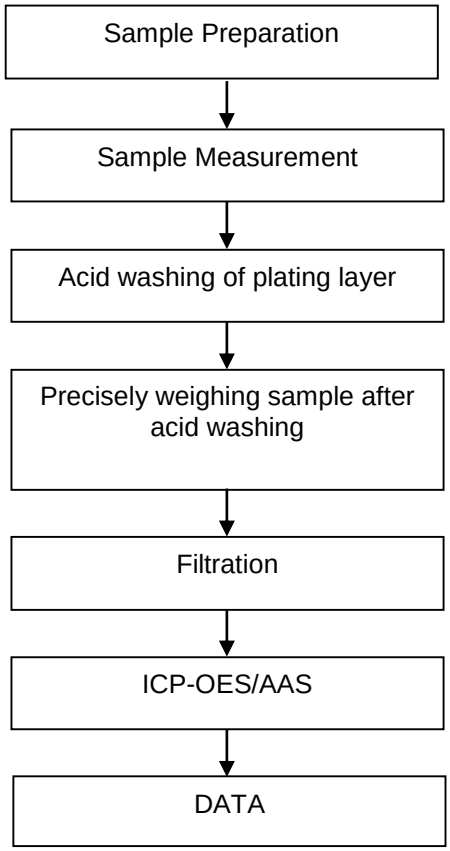

Unless otherwise agreed in writing, this document is issued by the Company subject to its General Conditions of Service printed overleaf, available on request or accessible at http://www.sgs.com/en/Terms-and-Conditions.aspx and, for electronic format documents, subject to Terms and Conditions for Electronic Documents at http://www.sgs.com/en/Terms-and-Conditions/Terms-e-Document.aspx. Attention is drawn to the limitation of liability, indemnification and jurisdiction issues defined therein. Any holder of this document is advised that information contained hereon reflects the Company's findings at the time of its intervention only and within the limits of Client's instructions, if any. The Company's sole responsibility is to its Client and this document does not exonerate parties to a transaction from exercising all their rights and obligations under the transaction documents. This document cannot be reproduced except in full, without prior written approval of the Company. Any unauthorized alteration, forgery or falsification of the content or appearance of this document is unlawful and offenders may be prosecuted to the fullest extent of the law. Unless otherwise stated the results shown in this test report refer only to the sample(s) tested .
Attention: To check the authenticity of testing /inspection report & certificate, please contact us at telephone: (86-755) 8307 1443, or email: CN.Doccheck@sgs.com
SGS-CSTC Standards Technical Services (Shanghai) Co.,Ltd. Testing Center-Chemical Laboratory
3rd Building,No.889 Yishan Road Xuhui District,Shanghai China 200233 t E&E (86–21) 61402553 f E&E (86–21)64953679 www.sgsgroup.com.cn
中国·上海·徐汇区宜山路889号3号楼 邮编: 200233 t HL (86–21) 61402594 f HL (86–21)61156899 e sgs.china@sgs.com
Member of the SGS Group (SGS SA)

ATTACHMENTS

Hexavalent Chromium (Cr(VI)) Testing Flow Chart

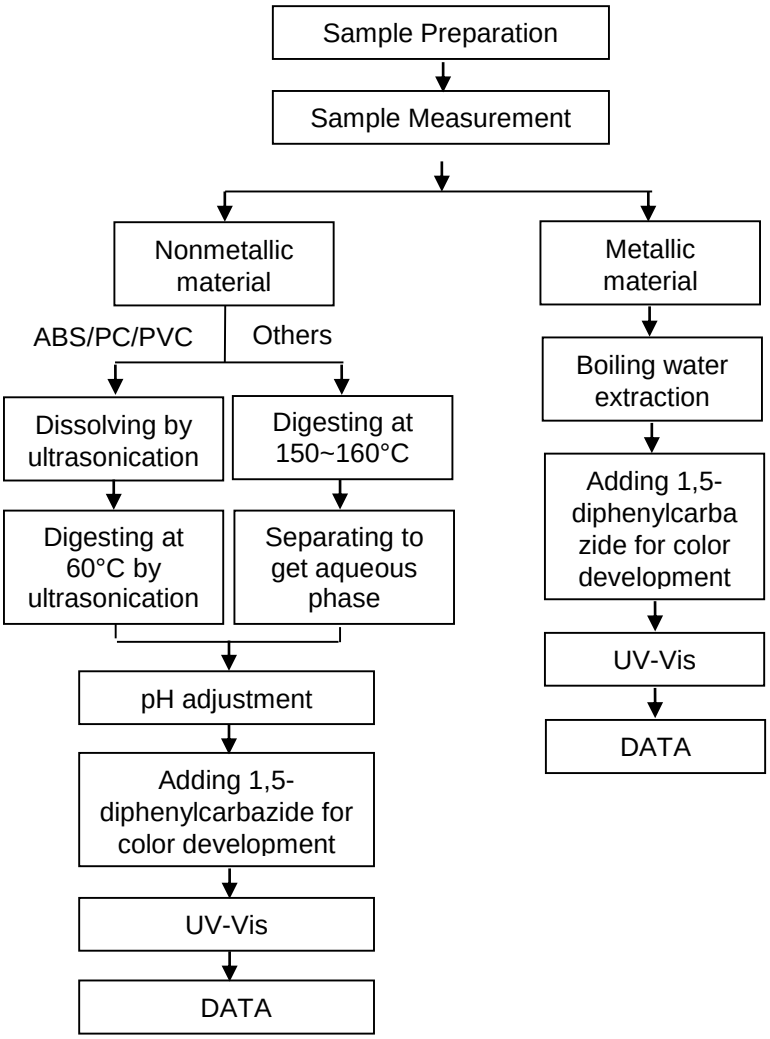

Unless otherwise agreed in writing, this document is issued by the Company subject to its General Conditions of Service printed overleaf, available on request or accessible at http://www.sgs.com/en/Terms-and-Conditions.aspx and, for electronic format documents, subject to Terms and Conditions for Electronic Documents at http://www.sgs.com/en/Terms-and-Conditions/Terms-e-Document.aspx. Attention is drawn to the limitation of liability, indemnification and jurisdiction issues defined therein. Any holder of this document is advised that information contained hereon reflects the Company's findings at the time of its intervention only and within the limits of Client's instructions, if any. The Company's sole responsibility is to its Client and this document does not exonerate parties to a transaction from exercising all their rights and obligations under the transaction documents. This document cannot be reproduced except in full, without prior written approval of the Company. Any unauthorized alteration, forgery or falsification of the content or appearance of this document is unlawful and offenders may be prosecuted to the fullest extent of the law. Unless otherwise stated the results shown in this test report refer only to the sample(s) tested .
Attention: To check the authenticity of testing /inspection report & certificate, please contact us at telephone: (86-755) 8307 1443, or email: CN.Doccheck@sgs.com
SGS-CSTC Standards Technical Services (Shanghai) Co., Ltd. Testing Center-Chemical Laboratory
3rd Building,No.889 Yishan Road Xuhui District,Shanghai China 200233 t E&E (86–21) 61402553 f E&E (86–21)64953679 www.sgsgroup.com.cn
中国·上海·徐汇区宜山路889号3号楼 邮编: 200233 t HL (86–21) 61402594 f HL (86–21)61156899 e sgs.china@sgs.com
Member of the SGS Group (SGS SA)

ATTACHMENTS

PBB/PBDE Testing Flow Chart

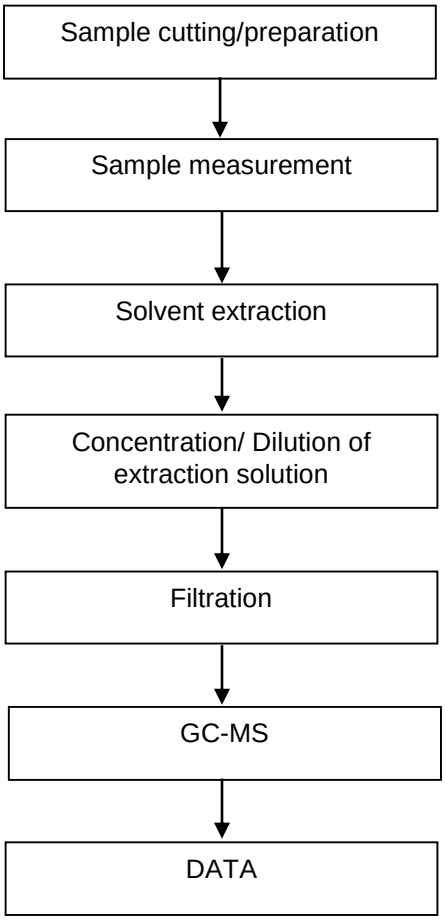

Unless otherwise agreed in writing, this document is issued by the Company subject to its General Conditions of Service printed overleaf, available on request or accessible at http://www.sgs.com/en/Terms-and-Conditions.aspx and, for electronic format documents, subject to Terms and Conditions for Electronic Documents at http://www.sgs.com/en/Terms-and-Conditions/Terms-e-Document.aspx. Attention is drawn to the limitation of liability, indemnification and jurisdiction issues defined therein. Any holder of this document is advised that information contained hereon reflects the Company's findings at the time of its intervention only and within the limits of Client's instructions, if any. The Company's sole responsibility is to its Client and this document does not exonerate parties to a transaction from exercising all their rights and obligations under the transaction documents. This document cannot be reproduced except in full, without prior written approval of the Company. Any unauthorized alteration, forgery or falsification of the content or appearance of this document is unlawful and offenders may be prosecuted to the fullest extent of the law. Unless otherwise stated the results shown in this test report refer only to the sample(s) tested .
Attention: To check the authenticity of testing /inspection report & certificate, please contact us at telephone: (86-755) 8307 1443, or email: CN.Doccheck@sgs.com
SGS-CSTC Standards Technical Services (Shanghai) Co.,Ltd. Testing Center-Chemical Laboratory
3rd Building,No.889 Yishan Road Xuhui District,Shanghai China 200233 t E&E (86–21) 61402553 f E&E (86–21)64953679 www.sgsgroup.com.cn
中国·上海·徐汇区宜山路889号3号楼 邮编: 200233 t HL (86–21) 61402594 f HL (86–21)61156899 e sgs.china@sgs.com
Member of the SGS Group (SGS SA)

ATTACHMENTS

Phthalates Testing Flow Chart

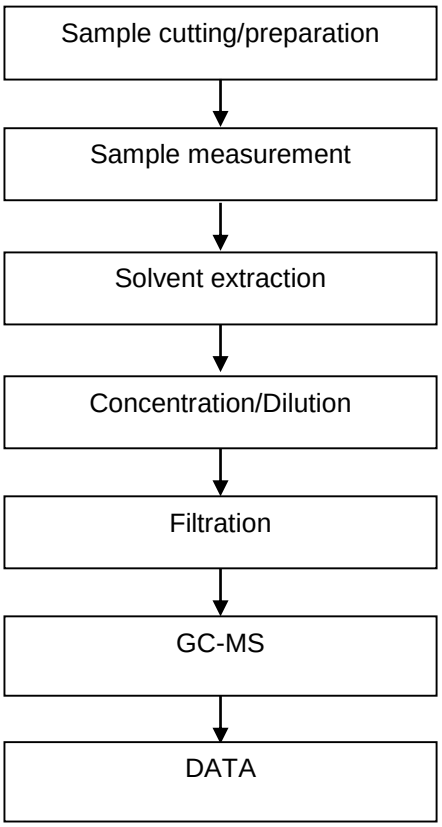

Unless otherwise agreed in writing, this document is issued by the Company subject to its General Conditions of Service printed overleaf, available on request or accessible at http://www.sgs.com/en/Terms-and-Conditions.aspx and, for electronic format documents, subject to Terms and Conditions for Electronic Documents at http://www.sgs.com/en/Terms-and-Conditions/Terms-e-Document.aspx. Attention is drawn to the limitation of liability, indemnification and jurisdiction issues defined therein. Any holder of this document is advised that information contained hereon reflects the Company's findings at the time of its intervention only and within the limits of Client's instructions, if any. The Company's sole responsibility is to its Client and this document does not exonerate parties to a transaction from exercising all their rights and obligations under the transaction documents. This document cannot be reproduced except in full, without prior written approval of the Company. Any unauthorized alteration, forgery or falsification of the content or appearance of this document is unlawful and offenders may be prosecuted to the fullest extent of the law. Unless otherwise stated the results shown in this test report refer only to the sample(s) tested .
Attention: To check the authenticity of testing /inspection report & certificate, please contact us at telephone: (86-755) 8307 1443, or email: CN.Doccheck@sgs.com

SGS-CSTC Standards Technical Services (Shanghai) Co.,Ltd. Testing Center-Chemical Laboratory
3rd Building,No.889 Yishan Road Xuhui District,Shanghai China 200233 t E&E (86–21) 61402553 f E&E (86–21)64953679 www.sgsgroup.com.cn
中国·上海·徐汇区宜山路889号3号楼 邮编: 200233 t HL (86–21) 61402594 f HL (86–21)61156899 e sgs.china@sgs.com

Member of the SGS Group (SGS SA)

Sample Photo:

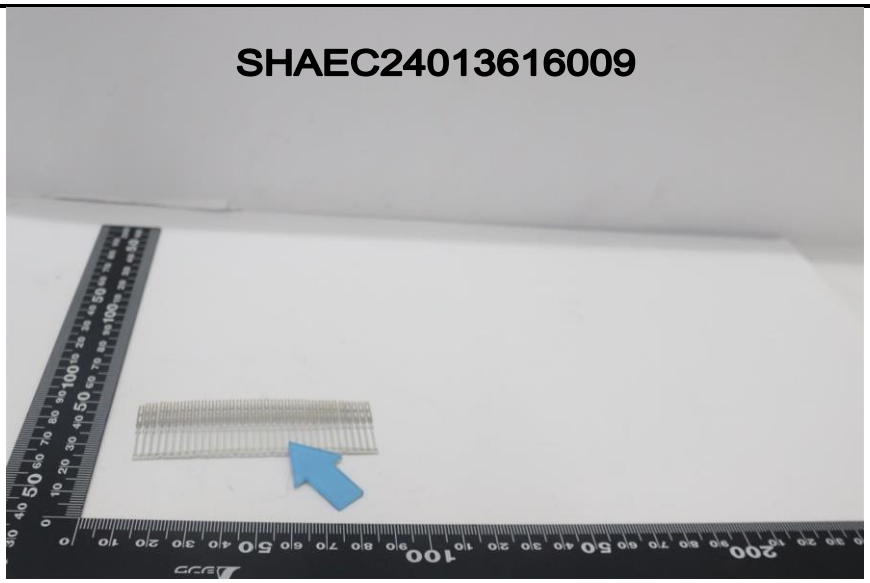

SHA24-0136160-0001.C048

SGS authenticate the photo on original report only

*** End of Report ***

Unless otherwise agreed in writing, this document is issued by the Company subject to its General Conditions of Service printed overleaf, available on request or accessible at http://www.sgs.com/en/Terms-and-Conditions.aspx and, for electronic format documents, subject to Terms and Conditions for Electronic Documents at http://www.sgs.com/en/Terms-and-Conditions/Terms-e-Document.aspx. Attention is drawn to the limitation of liability, indemnification and jurisdiction issues defined therein. Any holder of this document is advised that information contained hereon reflects the Company's findings at the time of its intervention only and within the limits of Client's instructions, if any. The Company's sole responsibility is to its Client and this document does not exonerate parties to a transaction from exercising all their rights and obligations under the transaction documents. This document cannot be reproduced except in full, without prior written approval of the Company. Any unauthorized alteration, forgery or falsification of the content or appearance of this document is unlawful and offenders may be prosecuted to the fullest extent of the law. Unless otherwise stated the results shown in this test report refer only to the sample(s) tested .
Attention: To check the authenticity of testing /inspection report & certificate, please contact us at telephone: (86-755) 8307 1443, or email: CN.Doccheck@sgs.com

SGS-CSTC Standards Technical Services (Shanghai) Co.,Ltd. Testing Center-Chemical Laboratory
3rd Building,No.889 Yishan Road Xuhui District,Shanghai China 200233 t E&E (86–21) 61402553 f E&E (86–21)64953679 www.sgsgroup.com.cn
中国·上海·徐汇区宜山路889号3号楼 邮编: 200233 t HL (86–21) 61402594 f HL (86–21)61156899 e sgs.china@sgs.com

Member of the SGS Group (SGS SA)

Test Report

No.: SHAEC24013616006 **Date:** Jun 27, 2024

Client Name: Xuancheng Changfeng Electroplating Technology Co., Ltd.

Client Address: No. 16 Jinniu Xi Road, Langxi County Economic Development Zone, Xuancheng, Anhui

Sample Name: Plating

Model No.: Gold plating

Supplier: CHANGFENG

The above sample(s) and information were provided by the client.

SGS Job No.: SHP24-019514

Sample Receiving Date: Jun 21, 2024

Testing Period: Jun 21, 2024 ~ Jun 25, 2024

Test Requested: Select test(s) as requested by the client.

Test Method(s): Please refer to next page(s).

Test Result(s): Please refer to next page(s).

Test Requirement	Conclusion
EU RoHS Directive (EU) 2015/863 amending Annex II to Directive 2011/65/EU - Lead, Mercury, Cadmium, Hexavalent chromium, Polybrominated biphenyls (PBB), Polybrominated diphenyl ethers (PBDE), Bis(2-ethylhexyl) phthalate (DEHP), Butyl benzyl phthalate (BBP), Dibutyl phthalate (DBP) and Diisobutyl phthalate (DIBP)	Pass

Signed for and on behalf of
SGS-CSTC Standards Technical Services (Shanghai) Co., Ltd.

Carol Luo
Approved Signatory

scan to see the report
47F40652

Unless otherwise agreed in writing, this document is issued by the Company subject to its General Conditions of Service printed overleaf, available on request or accessible at http://www.sgs.com/en/Terms-and-Conditions.aspx and, for electronic format documents, subject to Terms and Conditions for Electronic Documents at http://www.sgs.com/en/Terms-and-Conditions/Terms-e-Document.aspx. Attention is drawn to the limitation of liability, indemnification and jurisdiction issues defined therein. Any holder of this document is advised that information contained hereon reflects the Company's findings at the time of its intervention only and within the limits of Client's instructions, if any. The Company's sole responsibility is to its Client and this document does not exonerate parties to a transaction from exercising all their rights and obligations under the transaction documents. This document cannot be reproduced except in full, without prior written approval of the Company. Any unauthorized alteration, forgery or falsification of the content or appearance of this document is unlawful and offenders may be prosecuted to the fullest extent of the law. Unless otherwise stated the results shown in this test report refer only to the sample(s) tested.
Attention: To check the authenticity of testing /inspection report & certificate, please contact us at telephone: (86-755) 8307 1443, or email: CN.Doccheck@sgs.com

3rd Building,No.889 Yishan Road Xuhui District,Shanghai China 200233 t E&E (86-21) 61402553 f E&E (86-21)64953679 www.sgsgroup.com.cn
中国·上海·徐汇区宜山路889号3号楼 邮编: 200233 t HL (86-21) 61402594 f HL (86-21)61156899 e sgs.china@sgs.com

Member of the SGS Group (SGS SA)

Test Result(s):

Test Part Description：

SN ID	Sample No.	SGS Sample ID	Description
SN1	A45	SHA24-0136160-0001.C045	Golden plating

Remarks:

(1) 1 mg/kg = 1 ppm = 0.0001%
(2) MDL = Method Detection Limit
(3) ND = Not Detected (< MDL)
(4) "-" = Not Regulated

EU RoHS Directive (EU) 2015/863 amending Annex II to Directive 2011/65/EU - Lead, Mercury, Cadmium, Hexavalent chromium, Polybrominated biphenyls (PBB), Polybrominated diphenyl ethers (PBDE), Bis(2-ethylhexyl) phthalate (DEHP), Butyl benzyl phthalate (BBP), Dibutyl phthalate (DBP) and Diisobutyl phthalate (DIBP)

Test Method: With reference to IEC 62321-4:2013+AMD1:2017, IEC 62321-5:2013, IEC 62321-7-1:2015， IEC 62321-6:2015 and IEC 62321-8:2017, analysis was performed by ICP-OES, UV-Vis and GC-MS.

Test Item(s)	Limit	Unit(s)	MDL	A45
Cadmium(Cd)	100	mg/kg	10	ND
Lead (Pb)	1000	mg/kg	10	12
Mercury (Hg)	1000	mg/kg	10	ND
Hexavalent Chromium (Cr(VI))▼	-	μg/cm²	0.10	ND
Polybromobiphenyl (PBB)	1000	mg/kg	-	ND
Monobrominated biphenyl (MonoBB)	-	mg/kg	5	ND
Dibrominated biphenyl (DiBB)	-	mg/kg	5	ND
Tribrominated biphenyl (TriBB)	-	mg/kg	5	ND
Tetrabrominated biphenyl (TetraBB)	-	mg/kg	5	ND
Pentabrominated biphenyl (PentaBB)	-	mg/kg	5	ND
Hexabrominated biphenyl (HexaBB)	-	mg/kg	5	ND
Heptabrominated biphenyl (HeptaBB)	-	mg/kg	5	ND
Octabrominated biphenyl (OctaBB)	-	mg/kg	5	ND
Nonabrominated biphenyl (NonaBB)	-	mg/kg	5	ND
Decabrominated biphenyl (DecaBB)	-	mg/kg	5	ND
Polybromodiphenyl ether(PBDE)	1000	mg/kg	-	ND
Monobrominated diphenyl ether (MonoBDE)	-	mg/kg	5	ND
Dibrominated diphenyl ether (DiBDE)	-	mg/kg	5	ND
Tribrominated diphenyl ether (TriBDE)	-	mg/kg	5	ND
Tetrabrominated diphenyl ether (TetraBDE)	-	mg/kg	5	ND
Pentabrominated diphenyl ether (PentaBDE)	-	mg/kg	5	ND
Hexabrominated diphenyl ether (HexaBDE)	-	mg/kg	5	ND
Heptabrominated diphenyl ether (HeptaBDE)	-	mg/kg	5	ND

SGS-CSTC Standards Technical Services (Shanghai) Co., Ltd. Testing Center-Chemical Laboratory
检验检测专用章 Inspection & Testing Services

Unless otherwise agreed in writing, this document is issued by the Company subject to its General Conditions of Service printed overleaf, available on request or accessible at http://www.sgs.com/en/Terms-and-Conditions.aspx and, for electronic format documents, subject to Terms and Conditions for Electronic Documents at http://www.sgs.com/en/Terms-and-Conditions/Terms-e-Document.aspx. Attention is drawn to the limitation of liability, indemnification and jurisdiction issues defined therein. Any holder of this document is advised that information contained hereon reflects the Company's findings at the time of its intervention only and within the limits of Client's instructions, if any. The Company's sole responsibility is to its Client and this document does not exonerate parties to a transaction from exercising all their rights and obligations under the transaction documents. This document cannot be reproduced except in full, without prior written approval of the Company. Any unauthorized alteration, forgery or falsification of the content or appearance of this document is unlawful and offenders may be prosecuted to the fullest extent of the law. Unless otherwise stated the results shown in this test report refer only to the sample(s) tested .
Attention: To check the authenticity of testing /inspection report & certificate, please contact us at telephone: (86-755) 8307 1443, or email: CN.Doccheck@sgs.com
3rd Building,No.889 Yishan Road Xuhui District,Shanghai China 200233 t E&E (86–21) 61402553 f E&E (86–21)64953679 www.sgsgroup.com.cn
中国·上海·徐汇区宜山路889号3号楼 邮编: 200233 t HL (86–21) 61402594 f HL (86–21)61156899 e sgs.china@sgs.com
Member of the SGS Group (SGS SA)

Test Item(s)	Limit	Unit(s)	MDL	A45
Octabrominated diphenyl ether (OctaBDE)	-	mg/kg	5	ND
Nonabrominated diphenyl ether (NonaBDE)	-	mg/kg	5	ND
Decabrominated diphenyl ether (DecaBDE)	-	mg/kg	5	ND
Dibutyl phthalate (DBP)	1000	mg/kg	50	ND
Butyl benzyl phthalate (BBP)	1000	mg/kg	50	ND
Bis(2-ethylhexyl) phthalate (DEHP)	1000	mg/kg	50	ND
Diisobutyl phthalate (DIBP)	1000	mg/kg	50	ND

Notes:

(1) The maximum permissible limit is quoted from RoHS Directive (EU) 2015/863.

(2) IEC 62321 series is equivalent to EN 62321 series.

(3) ▼ = a. The sample is positive for Cr(VI) if the Cr(VI)concentration is greater than 0.13 μg/cm2. The sample coating is considered to contain Cr(VI)

b. The sample is negative for Cr(VI) if Cr(VI) is ND (concentration less than 0.10 μg/cm2). The coating is considered a non-Cr(VI) based coating

c. The result between 0.10 μg/cm2 and 0.13 μg/cm2 is considered to be inconclusive - unavoidable coating variations may influence the determination

Information on storage conditions and production date of the tested sample is unavailable and thus Cr(VI) results represent status of the sample at the time of testing.

(4) The results of PBBs, PBDEs, DBP, BBP, DEHP & DIBP are based on the complete samples submitted by the client, including plating and substrate.

Results & photo(s) of this report refer to test report SHAEC24013616001

Unless otherwise stated, the decision rule for conformity reporting is based on Binary Statement for Simple Acceptance Rule (*w*=0) stated in ILAC-G8:09/2019.

SGS-CSTC Standards Technical Services (Shanghai) Co., Ltd. Testing Center-Chemical Laboratory

Unless otherwise agreed in writing, this document is issued by the Company subject to its General Conditions of Service printed overleaf, available on request or accessible at http://www.sgs.com/en/Terms-and-Conditions.aspx and, for electronic format documents, subject to Terms and Conditions for Electronic Documents at http://www.sgs.com/en/Terms-and-Conditions/Terms-e-Document.aspx. Attention is drawn to the limitation of liability, indemnification and jurisdiction issues defined therein. Any holder of this document is advised that information contained hereon reflects the Company's findings at the time of its intervention only and within the limits of Client's instructions, if any. The Company's sole responsibility is to its Client and this document does not exonerate parties to a transaction from exercising all their rights and obligations under the transaction documents. This document cannot be reproduced except in full, without prior written approval of the Company. Any unauthorized alteration, forgery or falsification of the content or appearance of this document is unlawful and offenders may be prosecuted to the fullest extent of the law. Unless otherwise stated the results shown in this test report refer only to the sample(s) tested .

Attention: To check the authenticity of testing /inspection report & certificate, please contact us at telephone: (86-755) 8307 1443, or email: CN.Doccheck@sgs.com

3rd Building,No.889 Yishan Road Xuhui District,Shanghai China 200233 t E&E (86–21) 61402553 f E&E (86–21)64953679 www.sgsgroup.com.cn

中国·上海·徐汇区宜山路889号3号楼 邮编: 200233 t HL (86–21) 61402594 f HL (86–21)61156899 e sgs.china@sgs.com

Member of the SGS Group (SGS SA)

ATTACHMENTS

Plating Element Testing Flow Chart

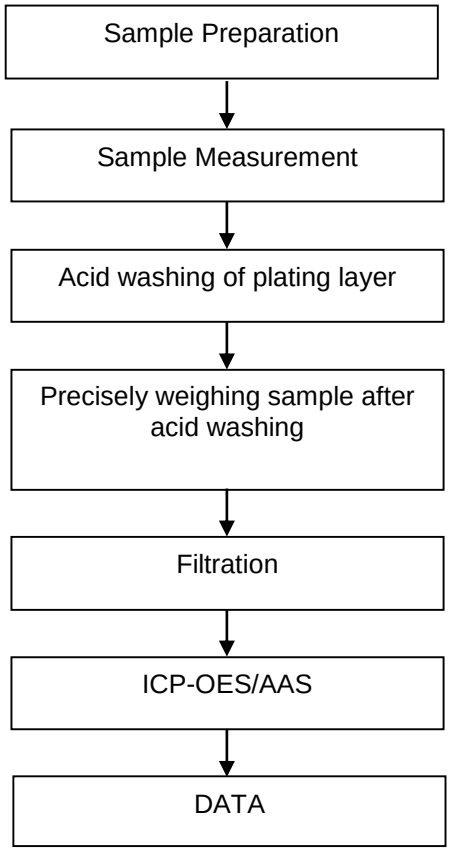

Unless otherwise agreed in writing, this document is issued by the Company subject to its General Conditions of Service printed overleaf, available on request or accessible at http://www.sgs.com/en/Terms-and-Conditions.aspx and, for electronic format documents, subject to Terms and Conditions for Electronic Documents at http://www.sgs.com/en/Terms-and-Conditions/Terms-e-Document.aspx. Attention is drawn to the limitation of liability, indemnification and jurisdiction issues defined therein. Any holder of this document is advised that information contained hereon reflects the Company's findings at the time of its intervention only and within the limits of Client's instructions, if any. The Company's sole responsibility is to its Client and this document does not exonerate parties to a transaction from exercising all their rights and obligations under the transaction documents. This document cannot be reproduced except in full, without prior written approval of the Company. Any unauthorized alteration, forgery or falsification of the content or appearance of this document is unlawful and offenders may be prosecuted to the fullest extent of the law. Unless otherwise stated the results shown in this test report refer only to the sample(s) tested .
Attention: To check the authenticity of testing /inspection report & certificate, please contact us at telephone: (86-755) 8307 1443, or email: CN.Doccheck@sgs.com
SGS-CSTC Standards Technical Services (Shanghai) Co.,Ltd. Testing Center-Chemical Laboratory
3rd Building,No.889 Yishan Road Xuhui District,Shanghai China 200233 t E&E (86–21) 61402553 f E&E (86–21)64953679 www.sgsgroup.com.cn
中国·上海·徐汇区宜山路889号3号楼 邮编: 200233 t HL (86–21) 61402594 f HL (86–21)61156899 e sgs.china@sgs.com
Member of the SGS Group (SGS SA)

ATTACHMENTS

Hexavalent Chromium (Cr(VI)) Testing Flow Chart

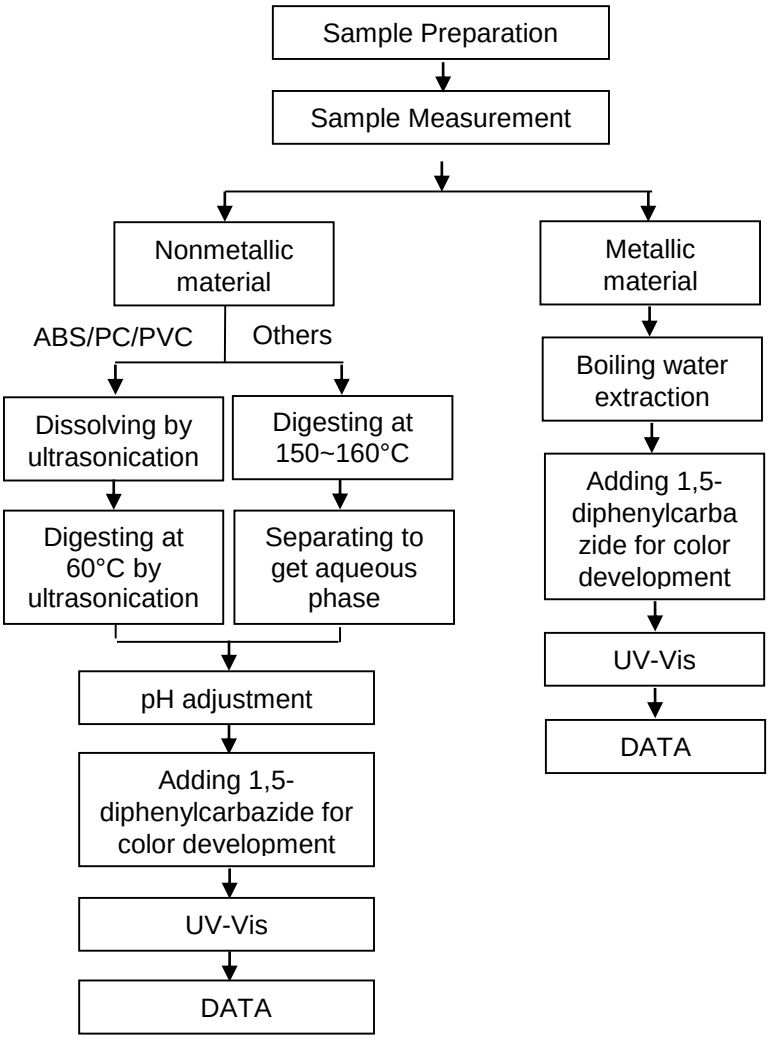

Unless otherwise agreed in writing, this document is issued by the Company subject to its General Conditions of Service printed overleaf, available on request or accessible at http://www.sgs.com/en/Terms-and-Conditions.aspx and, for electronic format documents, subject to Terms and Conditions for Electronic Documents at http://www.sgs.com/en/Terms-and-Conditions/Terms-e-Document.aspx. Attention is drawn to the limitation of liability, indemnification and jurisdiction issues defined therein. Any holder of this document is advised that information contained hereon reflects the Company's findings at the time of its intervention only and within the limits of Client's instructions, if any. The Company's sole responsibility is to its Client and this document does not exonerate parties to a transaction from exercising all their rights and obligations under the transaction documents. This document cannot be reproduced except in full, without prior written approval of the Company. Any unauthorized alteration, forgery or falsification of the content or appearance of this document is unlawful and offenders may be prosecuted to the fullest extent of the law. Unless otherwise stated the results shown in this test report refer only to the sample(s) tested .
Attention: To check the authenticity of testing /inspection report & certificate, please contact us at telephone: (86-755) 8307 1443, or email: CN.Doccheck@sgs.com
SGS-CSTC Standards Technical Services (Shanghai) Co., Ltd. Testing Center-Chemical Laboratory
3rd Building,No.889 Yishan Road Xuhui District,Shanghai China 200233 t E&E (86–21) 61402553 f E&E (86–21)64953679 www.sgsgroup.com.cn
中国·上海·徐汇区宜山路889号3号楼 邮编: 200233 t HL (86–21) 61402594 f HL (86–21)61156899 e sgs.china@sgs.com
Member of the SGS Group (SGS SA)

ATTACHMENTS

PBB/PBDE Testing Flow Chart

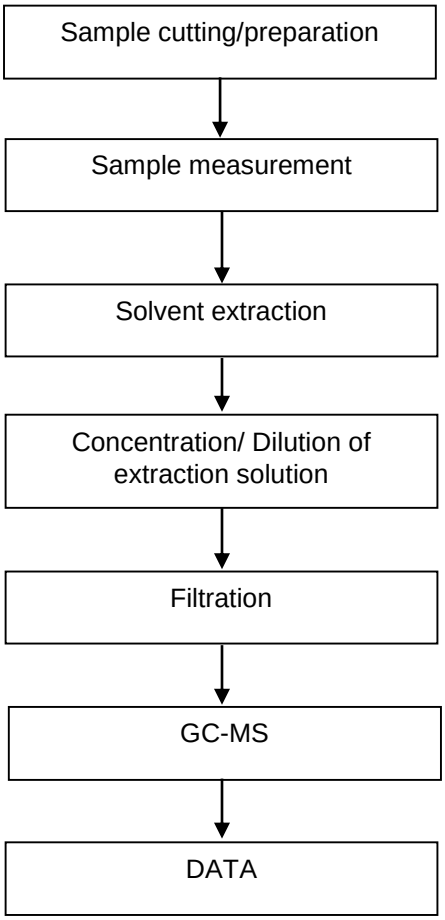

Unless otherwise agreed in writing, this document is issued by the Company subject to its General Conditions of Service printed overleaf, available on request or accessible at http://www.sgs.com/en/Terms-and-Conditions.aspx and, for electronic format documents, subject to Terms and Conditions for Electronic Documents at http://www.sgs.com/en/Terms-and-Conditions/Terms-e-Document.aspx. Attention is drawn to the limitation of liability, indemnification and jurisdiction issues defined therein. Any holder of this document is advised that information contained hereon reflects the Company's findings at the time of its intervention only and within the limits of Client's instructions, if any. The Company's sole responsibility is to its Client and this document does not exonerate parties to a transaction from exercising all their rights and obligations under the transaction documents. This document cannot be reproduced except in full, without prior written approval of the Company. Any unauthorized alteration, forgery or falsification of the content or appearance of this document is unlawful and offenders may be prosecuted to the fullest extent of the law. Unless otherwise stated the results shown in this test report refer only to the sample(s) tested .
Attention: To check the authenticity of testing /inspection report & certificate, please contact us at telephone: (86-755) 8307 1443, or email: CN.Doccheck@sgs.com
SGS-CSTC Standards Technical Services (Shanghai) Co.,Ltd. Testing Center-Chemical Laboratory
3rd Building,No.889 Yishan Road Xuhui District,Shanghai China 200233 t E&E (86–21) 61402553 f E&E (86–21)64953679 www.sgsgroup.com.cn
中国·上海·徐汇区宜山路889号3号楼 邮编: 200233 t HL (86–21) 61402594 f HL (86–21)61156899 e sgs.china@sgs.com
Member of the SGS Group (SGS SA)

ATTACHMENTS

Phthalates Testing Flow Chart

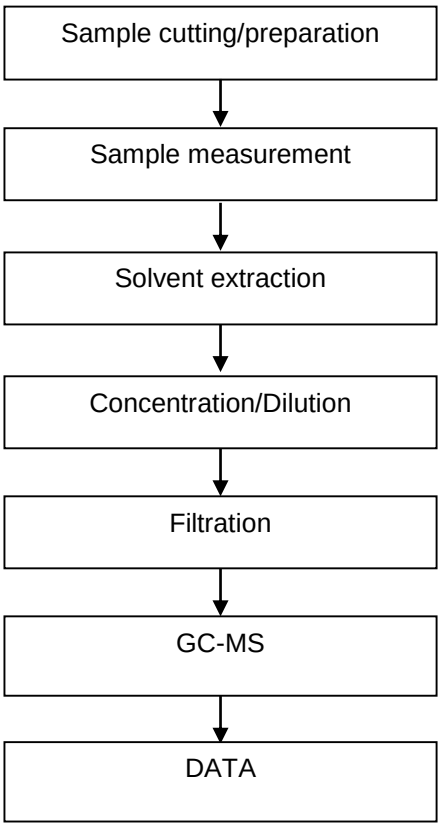

Unless otherwise agreed in writing, this document is issued by the Company subject to its General Conditions of Service printed overleaf, available on request or accessible at http://www.sgs.com/en/Terms-and-Conditions.aspx and, for electronic format documents, subject to Terms and Conditions for Electronic Documents at http://www.sgs.com/en/Terms-and-Conditions/Terms-e-Document.aspx. Attention is drawn to the limitation of liability, indemnification and jurisdiction issues defined therein. Any holder of this document is advised that information contained hereon reflects the Company's findings at the time of its intervention only and within the limits of Client's instructions, if any. The Company's sole responsibility is to its Client and this document does not exonerate parties to a transaction from exercising all their rights and obligations under the transaction documents. This document cannot be reproduced except in full, without prior written approval of the Company. Any unauthorized alteration, forgery or falsification of the content or appearance of this document is unlawful and offenders may be prosecuted to the fullest extent of the law. Unless otherwise stated the results shown in this test report refer only to the sample(s) tested .
Attention: To check the authenticity of testing /inspection report & certificate, please contact us at telephone: (86-755) 8307 1443, or email: CN.Doccheck@sgs.com

SGS-CSTC Standards Technical Services (Shanghai) Co.,Ltd. Testing Center-Chemical Laboratory
3rd Building,No.889 Yishan Road Xuhui District,Shanghai China 200233 t E&E (86–21) 61402553 f E&E (86–21)64953679 www.sgsgroup.com.cn
中国·上海·徐汇区宜山路889号3号楼 邮编: 200233 t HL (86–21) 61402594 f HL (86–21)61156899 e sgs.china@sgs.com

Member of the SGS Group (SGS SA)

Sample Photo:



SHA24-0136160-0001.C045

SGS authenticate the photo on original report only

*** End of Report ***

Unless otherwise agreed in writing, this document is issued by the Company subject to its General Conditions of Service printed overleaf, available on request or accessible at http://www.sgs.com/en/Terms-and-Conditions.aspx and, for electronic format documents, subject to Terms and Conditions for Electronic Documents at http://www.sgs.com/en/Terms-and-Conditions/Terms-e-Document.aspx. Attention is drawn to the limitation of liability, indemnification and jurisdiction issues defined therein. Any holder of this document is advised that information contained hereon reflects the Company's findings at the time of its intervention only and within the limits of Client's instructions, if any. The Company's sole responsibility is to its Client and this document does not exonerate parties to a transaction from exercising all their rights and obligations under the transaction documents. This document cannot be reproduced except in full, without prior written approval of the Company. Any unauthorized alteration, forgery or falsification of the content or appearance of this document is unlawful and offenders may be prosecuted to the fullest extent of the law. Unless otherwise stated the results shown in this test report refer only to the sample(s) tested .
Attention: To check the authenticity of testing /inspection report & certificate, please contact us at telephone: (86-755) 8307 1443, or email: CN.Doccheck@sgs.com

SGS-CSTC Standards Technical Services (Shanghai) Co.,Ltd. Testing Center-Chemical Laboratory.
3rd Building,No.889 Yishan Road Xuhui District,Shanghai China 200233 t E&E (86–21) 61402553 f E&E (86–21)64953679 www.sgsgroup.com.cn
中国·上海·徐汇区宜山路889号3号楼 邮编: 200233 t HL (86–21) 61402594 f HL (86–21)61156899 e sgs.china@sgs.com

Member of the SGS Group (SGS SA)

Test Report

No.: SHAEC24013616007 **Date:** Jun 27, 2024

Client Name: Xuancheng Changfeng Electroplating Technology Co., Ltd.

Client Address: No. 16 Jinniu Xi Road, Langxi County Economic Development Zone, Xuancheng, Anhui

Sample Name: Plating

Model No.: Nickel plating

Supplier: CHANGFENG

The above sample(s) and information were provided by the client.

SGS Job No.: SHP24-019514

Sample Receiving Date: Jun 21, 2024

Testing Period: Jun 21, 2024 ~ Jun 25, 2024

Test Requested: Select test(s) as requested by the client.

Test Method(s): Please refer to next page(s).

Test Result(s): Please refer to next page(s).

Test Requirement	Conclusion
EU RoHS Directive (EU) 2015/863 amending Annex II to Directive 2011/65/EU - Lead, Mercury, Cadmium, Hexavalent chromium, Polybrominated biphenyls (PBB), Polybrominated diphenyl ethers (PBDE), Bis(2-ethylhexyl) phthalate (DEHP), Butyl benzyl phthalate (BBP), Dibutyl phthalate (DBP) and Diisobutyl phthalate (DIBP)	Pass

Signed for and on behalf of
SGS-CSTC Standards Technical Services (Shanghai) Co., Ltd.

Carol Luo

Carol Luo
Approved Signatory

scan to see the report
64C96704

Unless otherwise agreed in writing, this document is issued by the Company subject to its General Conditions of Service printed overleaf, available on request or accessible at http://www.sgs.com/en/Terms-and-Conditions.aspx and, for electronic format documents, subject to Terms and Conditions for Electronic Documents at http://www.sgs.com/en/Terms-and-Conditions/Terms-e-Document.aspx. Attention is drawn to the limitation of liability, indemnification and jurisdiction issues defined therein. Any holder of this document is advised that information contained hereon reflects the Company's findings at the time of its intervention only and within the limits of Client's instructions, if any. The Company's sole responsibility is to its Client and this document does not exonerate parties to a transaction from exercising all their rights and obligations under the transaction documents. This document cannot be reproduced except in full, without prior written approval of the Company. Any unauthorized alteration, forgery or falsification of the content or appearance of this document is unlawful and offenders may be prosecuted to the fullest extent of the law. Unless otherwise stated the results shown in this test report refer only to the sample(s) tested.
Attention: To check the authenticity of testing /inspection report & certificate, please contact us at telephone: (86-755) 8307 1443, or email: CN.Doccheck@sgs.com

3rd Building,No.889 Yishan Road Xuhui District,Shanghai China 200233 t E&E (86-21) 61402553 f E&E (86-21)64953679 www.sgsgroup.com.cn
中国·上海·徐汇区宜山路889号3号楼 邮编: 200233 t HL (86-21) 61402594 f HL (86-21)61156899 e sgs.china@sgs.com

Member of the SGS Group (SGS SA)

Test Result(s):

Test Part Description：

SN ID	Sample No.	SGS Sample ID	Description
SN1	A46	SHA24-0136160-0001.C046	Silver plating

Remarks:

(1) 1 mg/kg = 1 ppm = 0.0001%
(2) MDL = Method Detection Limit
(3) ND = Not Detected (< MDL)
(4) "-" = Not Regulated

EU RoHS Directive (EU) 2015/863 amending Annex II to Directive 2011/65/EU - Lead, Mercury, Cadmium, Hexavalent chromium, Polybrominated biphenyls (PBB), Polybrominated diphenyl ethers (PBDE), Bis(2-ethylhexyl) phthalate (DEHP), Butyl benzyl phthalate (BBP), Dibutyl phthalate (DBP) and Diisobutyl phthalate (DIBP)

Test Method: With reference to IEC 62321-4:2013+AMD1:2017, IEC 62321-5:2013, IEC 62321-7-1:2015， IEC 62321-6:2015 and IEC 62321-8:2017, analysis was performed by ICP-OES, UV-Vis and GC-MS.

Test Item(s)	Limit	Unit(s)	MDL	A46
Cadmium(Cd)	100	mg/kg	10	ND
Lead (Pb)	1000	mg/kg	10	ND
Mercury (Hg)	1000	mg/kg	10	ND
Hexavalent Chromium (Cr(VI))▼	-	µg/cm²	0.10	ND
Polybromobiphenyl (PBB)	1000	mg/kg	-	ND
Monobrominated biphenyl (MonoBB)	-	mg/kg	5	ND
Dibrominated biphenyl (DiBB)	-	mg/kg	5	ND
Tribrominated biphenyl (TriBB)	-	mg/kg	5	ND
Tetrabrominated biphenyl (TetraBB)	-	mg/kg	5	ND
Pentabrominated biphenyl (PentaBB)	-	mg/kg	5	ND
Hexabrominated biphenyl (HexaBB)	-	mg/kg	5	ND
Heptabrominated biphenyl (HeptaBB)	-	mg/kg	5	ND
Octabrominated biphenyl (OctaBB)	-	mg/kg	5	ND
Nonabrominated biphenyl (NonaBB)	-	mg/kg	5	ND
Decabrominated biphenyl (DecaBB)	-	mg/kg	5	ND
Polybromodiphenyl ether(PBDE)	1000	mg/kg	-	ND
Monobrominated diphenyl ether (MonoBDE)	-	mg/kg	5	ND
Dibrominated diphenyl ether (DiBDE)	-	mg/kg	5	ND
Tribrominated diphenyl ether (TriBDE)	-	mg/kg	5	ND
Tetrabrominated diphenyl ether (TetraBDE)	-	mg/kg	5	ND
Pentabrominated diphenyl ether (PentaBDE)	-	mg/kg	5	ND
Hexabrominated diphenyl ether (HexaBDE)	-	mg/kg	5	ND
Heptabrominated diphenyl ether (HeptaBDE)	-	mg/kg	5	ND

SGS-CSTC Standards Technical Services (Shanghai) Co., Ltd. Testing Center-Chemical Laboratory

Unless otherwise agreed in writing, this document is issued by the Company subject to its General Conditions of Service printed overleaf, available on request or accessible at http://www.sgs.com/en/Terms-and-Conditions.aspx and, for electronic format documents, subject to Terms and Conditions for Electronic Documents at http://www.sgs.com/en/Terms-and-Conditions/Terms-e-Document.aspx. Attention is drawn to the limitation of liability, indemnification and jurisdiction issues defined therein. Any holder of this document is advised that information contained hereon reflects the Company's findings at the time of its intervention only and within the limits of Client's instructions, if any. The Company's sole responsibility is to its Client and this document does not exonerate parties to a transaction from exercising all their rights and obligations under the transaction documents. This document cannot be reproduced except in full, without prior written approval of the Company. Any unauthorized alteration, forgery or falsification of the content or appearance of this document is unlawful and offenders may be prosecuted to the fullest extent of the law. Unless otherwise stated the results shown in this test report refer only to the sample(s) tested .
Attention: To check the authenticity of testing /inspection report & certificate, please contact us at telephone: (86-755) 8307 1443, or email: CN.Doccheck@sgs.com
3rd Building,No.889 Yishan Road Xuhui District,Shanghai China 200233 t E&E (86–21) 61402553 f E&E (86–21)64953679 www.sgsgroup.com.cn
中国·上海·徐汇区宜山路889号3号楼 邮编: 200233 t HL (86–21) 61402594 f HL (86–21)61156899 e sgs.china@sgs.com
Member of the SGS Group (SGS SA)

Test Item(s)	Limit	Unit(s)	MDL	A46
Octabrominated diphenyl ether (OctaBDE)	-	mg/kg	5	ND
Nonabrominated diphenyl ether (NonaBDE)	-	mg/kg	5	ND
Decabrominated diphenyl ether (DecaBDE)	-	mg/kg	5	ND
Dibutyl phthalate (DBP)	1000	mg/kg	50	ND
Butyl benzyl phthalate (BBP)	1000	mg/kg	50	ND
Bis(2-ethylhexyl) phthalate (DEHP)	1000	mg/kg	50	ND
Diisobutyl phthalate (DIBP)	1000	mg/kg	50	ND

Notes:

(1) The maximum permissible limit is quoted from RoHS Directive (EU) 2015/863.

(2) IEC 62321 series is equivalent to EN 62321 series.

(3) ▼ = a. The sample is positive for Cr(VI) if the Cr(VI)concentration is greater than 0.13 μg/cm2. The sample coating is considered to contain Cr(VI)

b. The sample is negative for Cr(VI) if Cr(VI) is ND (concentration less than 0.10 μg/cm2). The coating is considered a non-Cr(VI) based coating

c. The result between 0.10 μg/cm2 and 0.13 μg/cm2 is considered to be inconclusive - unavoidable coating variations may influence the determination

Information on storage conditions and production date of the tested sample is unavailable and thus Cr(VI) results represent status of the sample at the time of testing.

(4) The results of PBBs, PBDEs, DBP, BBP, DEHP & DIBP are based on the complete samples submitted by the client, including plating and substrate.

Results & photo(s) of this report refer to test report SHAEC24013616002

Unless otherwise stated, the decision rule for conformity reporting is based on Binary Statement for Simple Acceptance Rule (*w*=0) stated in ILAC-G8:09/2019.

检验检测专用章 Inspection & Testing Services

SGS-CSTC Standards Technical Services (Shanghai) Co.,Ltd. Testing Center-Chemical Laboratory

Unless otherwise agreed in writing, this document is issued by the Company subject to its General Conditions of Service printed overleaf, available on request or accessible at http://www.sgs.com/en/Terms-and-Conditions.aspx and, for electronic format documents, subject to Terms and Conditions for Electronic Documents at http://www.sgs.com/en/Terms-and-Conditions/Terms-e-Document.aspx. Attention is drawn to the limitation of liability, indemnification and jurisdiction issues defined therein. Any holder of this document is advised that information contained hereon reflects the Company's findings at the time of its intervention only and within the limits of Client's instructions, if any. The Company's sole responsibility is to its Client and this document does not exonerate parties to a transaction from exercising all their rights and obligations under the transaction documents. This document cannot be reproduced except in full, without prior written approval of the Company. Any unauthorized alteration, forgery or falsification of the content or appearance of this document is unlawful and offenders may be prosecuted to the fullest extent of the law. Unless otherwise stated the results shown in this test report refer only to the sample(s) tested .

Attention: To check the authenticity of testing /inspection report & certificate, please contact us at telephone: (86-755) 8307 1443, or email: CN.Doccheck@sgs.com

3rd Building,No.889 Yishan Road Xuhui District,Shanghai China 200233 t E&E (86–21) 61402553 f E&E (86–21)64953679 www.sgsgroup.com.cn

中国·上海·徐汇区宜山路889号3号楼 邮编: 200233 t HL (86–21) 61402594 f HL (86–21)61156899 e sgs.china@sgs.com

Member of the SGS Group (SGS SA)

ATTACHMENTS

Plating Element Testing Flow Chart

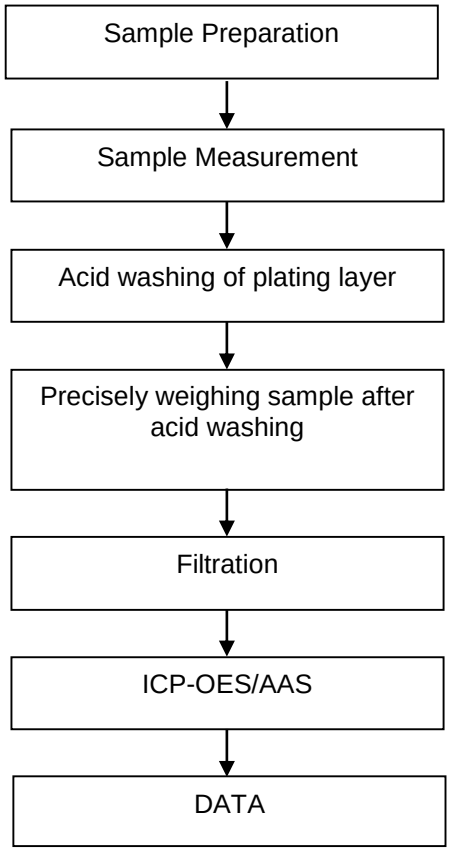

Unless otherwise agreed in writing, this document is issued by the Company subject to its General Conditions of Service printed overleaf, available on request or accessible at http://www.sgs.com/en/Terms-and-Conditions.aspx and, for electronic format documents, subject to Terms and Conditions for Electronic Documents at http://www.sgs.com/en/Terms-and-Conditions/Terms-e-Document.aspx. Attention is drawn to the limitation of liability, indemnification and jurisdiction issues defined therein. Any holder of this document is advised that information contained hereon reflects the Company's findings at the time of its intervention only and within the limits of Client's instructions, if any. The Company's sole responsibility is to its Client and this document does not exonerate parties to a transaction from exercising all their rights and obligations under the transaction documents. This document cannot be reproduced except in full, without prior written approval of the Company. Any unauthorized alteration, forgery or falsification of the content or appearance of this document is unlawful and offenders may be prosecuted to the fullest extent of the law. Unless otherwise stated the results shown in this test report refer only to the sample(s) tested .
Attention: To check the authenticity of testing /inspection report & certificate, please contact us at telephone: (86-755) 8307 1443, or email: CN.Doccheck@sgs.com
SGS-CSTC Standards Technical Services (Shanghai) Co.,Ltd. Testing Center-Chemical Laboratory
3rd Building,No.889 Yishan Road Xuhui District,Shanghai China 200233 t E&E (86–21) 61402553 f E&E (86–21)64953679 www.sgsgroup.com.cn
中国·上海·徐汇区宜山路889号3号楼 邮编: 200233 t HL (86–21) 61402594 f HL (86–21)61156899 e sgs.china@sgs.com
Member of the SGS Group (SGS SA)

ATTACHMENTS

Hexavalent Chromium (Cr(VI)) Testing Flow Chart

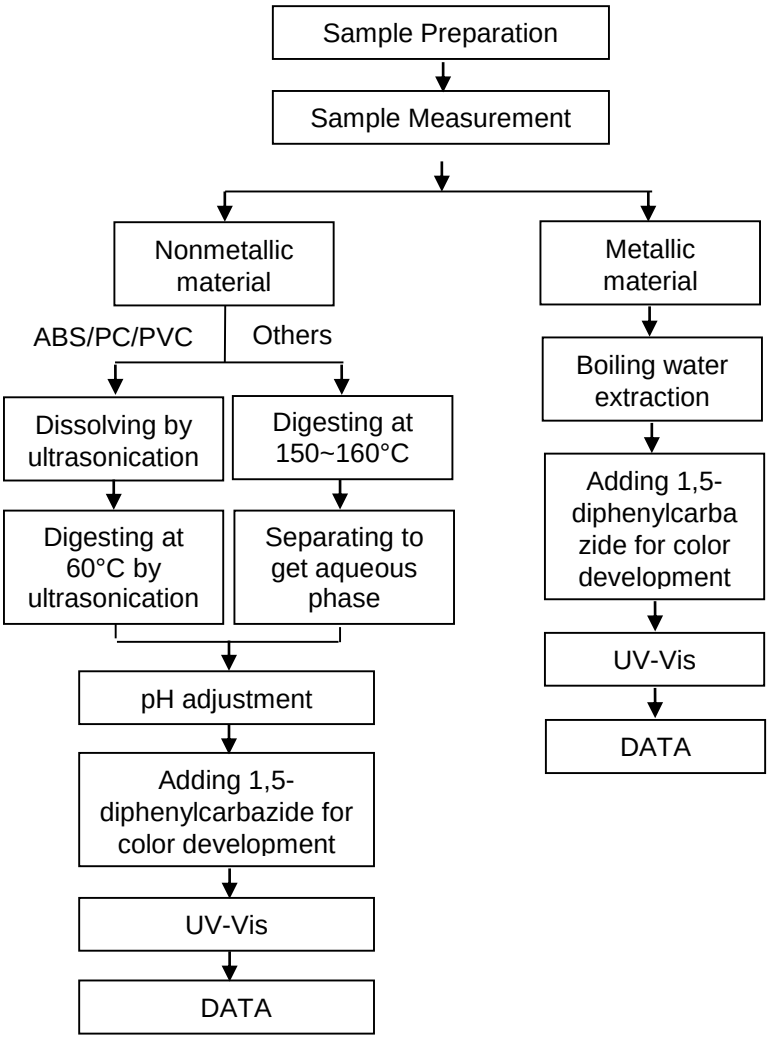

Unless otherwise agreed in writing, this document is issued by the Company subject to its General Conditions of Service printed overleaf, available on request or accessible at http://www.sgs.com/en/Terms-and-Conditions.aspx and, for electronic format documents, subject to Terms and Conditions for Electronic Documents at http://www.sgs.com/en/Terms-and-Conditions/Terms-e-Document.aspx. Attention is drawn to the limitation of liability, indemnification and jurisdiction issues defined therein. Any holder of this document is advised that information contained hereon reflects the Company's findings at the time of its intervention only and within the limits of Client's instructions, if any. The Company's sole responsibility is to its Client and this document does not exonerate parties to a transaction from exercising all their rights and obligations under the transaction documents. This document cannot be reproduced except in full, without prior written approval of the Company. Any unauthorized alteration, forgery or falsification of the content or appearance of this document is unlawful and offenders may be prosecuted to the fullest extent of the law. Unless otherwise stated the results shown in this test report refer only to the sample(s) tested .
Attention: To check the authenticity of testing /inspection report & certificate, please contact us at telephone: (86-755) 8307 1443, or email: CN.Doccheck@sgs.com

SGS-CSTC Standards Technical Services (Shanghai) Co., Ltd. Testing Center-Chemical Laboratory
3rd Building,No.889 Yishan Road Xuhui District,Shanghai China 200233 t E&E (86–21) 61402553 f E&E (86–21)64953679 www.sgsgroup.com.cn
中国·上海·徐汇区宜山路889号3号楼 邮编: 200233 t HL (86–21) 61402594 f HL (86–21)61156899 e sgs.china@sgs.com

Member of the SGS Group (SGS SA)

ATTACHMENTS

PBB/PBDE Testing Flow Chart

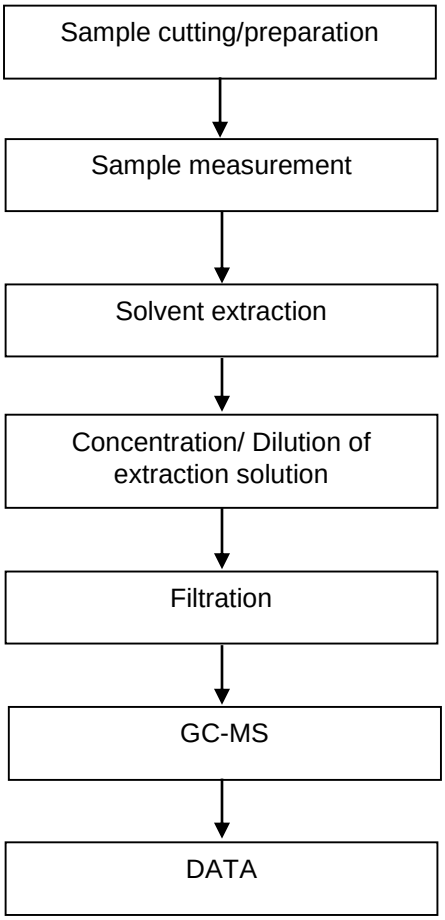

Unless otherwise agreed in writing, this document is issued by the Company subject to its General Conditions of Service printed overleaf, available on request or accessible at http://www.sgs.com/en/Terms-and-Conditions.aspx and, for electronic format documents, subject to Terms and Conditions for Electronic Documents at http://www.sgs.com/en/Terms-and-Conditions/Terms-e-Document.aspx. Attention is drawn to the limitation of liability, indemnification and jurisdiction issues defined therein. Any holder of this document is advised that information contained hereon reflects the Company's findings at the time of its intervention only and within the limits of Client's instructions, if any. The Company's sole responsibility is to its Client and this document does not exonerate parties to a transaction from exercising all their rights and obligations under the transaction documents. This document cannot be reproduced except in full, without prior written approval of the Company. Any unauthorized alteration, forgery or falsification of the content or appearance of this document is unlawful and offenders may be prosecuted to the fullest extent of the law. Unless otherwise stated the results shown in this test report refer only to the sample(s) tested .
Attention: To check the authenticity of testing /inspection report & certificate, please contact us at telephone: (86-755) 8307 1443, or email: CN.Doccheck@sgs.com
SGS-CSTC Standards Technical Services (Shanghai) Co.,Ltd. Testing Center-Chemical Laboratory
3rd Building,No.889 Yishan Road Xuhui District,Shanghai China 200233 t E&E (86–21) 61402553 f E&E (86–21)64953679 www.sgsgroup.com.cn
中国·上海·徐汇区宜山路889号3号楼 邮编: 200233 t HL (86–21) 61402594 f HL (86–21)61156899 e sgs.china@sgs.com
Member of the SGS Group (SGS SA)

ATTACHMENTS

Phthalates Testing Flow Chart

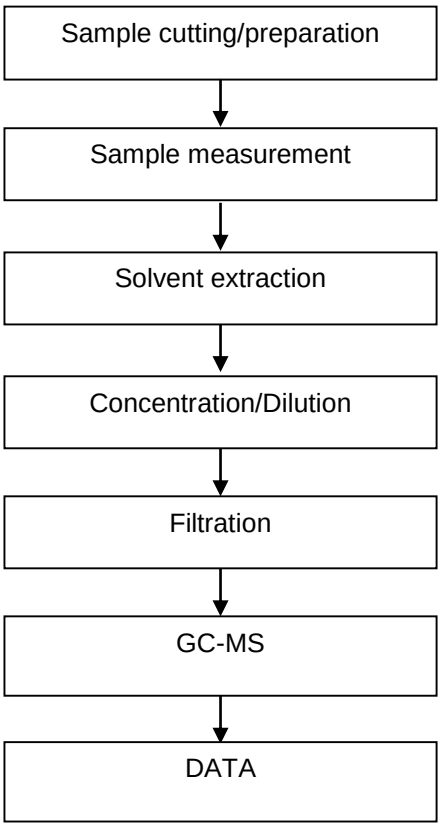

Unless otherwise agreed in writing, this document is issued by the Company subject to its General Conditions of Service printed overleaf, available on request or accessible at http://www.sgs.com/en/Terms-and-Conditions.aspx and, for electronic format documents, subject to Terms and Conditions for Electronic Documents at http://www.sgs.com/en/Terms-and-Conditions/Terms-e-Document.aspx. Attention is drawn to the limitation of liability, indemnification and jurisdiction issues defined therein. Any holder of this document is advised that information contained hereon reflects the Company's findings at the time of its intervention only and within the limits of Client's instructions, if any. The Company's sole responsibility is to its Client and this document does not exonerate parties to a transaction from exercising all their rights and obligations under the transaction documents. This document cannot be reproduced except in full, without prior written approval of the Company. Any unauthorized alteration, forgery or falsification of the content or appearance of this document is unlawful and offenders may be prosecuted to the fullest extent of the law. Unless otherwise stated the results shown in this test report refer only to the sample(s) tested .
Attention: To check the authenticity of testing /inspection report & certificate, please contact us at telephone: (86-755) 8307 1443, or email: CN.Doccheck@sgs.com

SGS-CSTC Standards Technical Services (Shanghai) Co.,Ltd. Testing Center-Chemical Laboratory
3rd Building,No.889 Yishan Road Xuhui District,Shanghai China 200233 t E&E (86–21) 61402553 f E&E (86–21)64953679 www.sgsgroup.com.cn
中国·上海·徐汇区宜山路889号3号楼 邮编: 200233 t HL (86–21) 61402594 f HL (86–21)61156899 e sgs.china@sgs.com

Member of the SGS Group (SGS SA)

Sample Photo:



SHA24-0136160-0001.C046

SGS authenticate the photo on original report only

*** End of Report ***

Unless otherwise agreed in writing, this document is issued by the Company subject to its General Conditions of Service printed overleaf, available on request or accessible at http://www.sgs.com/en/Terms-and-Conditions.aspx and, for electronic format documents, subject to Terms and Conditions for Electronic Documents at http://www.sgs.com/en/Terms-and-Conditions/Terms-e-Document.aspx. Attention is drawn to the limitation of liability, indemnification and jurisdiction issues defined therein. Any holder of this document is advised that information contained hereon reflects the Company's findings at the time of its intervention only and within the limits of Client's instructions, if any. The Company's sole responsibility is to its Client and this document does not exonerate parties to a transaction from exercising all their rights and obligations under the transaction documents. This document cannot be reproduced except in full, without prior written approval of the Company. Any unauthorized alteration, forgery or falsification of the content or appearance of this document is unlawful and offenders may be prosecuted to the fullest extent of the law. Unless otherwise stated the results shown in this test report refer only to the sample(s) tested .
Attention: To check the authenticity of testing /inspection report & certificate, please contact us at telephone: (86-755) 8307 1443, or email: CN.Doccheck@sgs.com

SGS-CSTC Standards Technical Services (Shanghai) Co., Ltd. Testing Center-Chemical Laboratory
3rd Building,No.889 Yishan Road Xuhui District,Shanghai China 200233 t E&E (86–21) 61402553 f E&E (86–21)64953679 www.sgsgroup.com.cn
中国·上海·徐汇区宜山路889号3号楼 邮编: 200233 t HL (86–21) 61402594 f HL (86–21)61156899 e sgs.china@sgs.com

Member of the SGS Group (SGS SA)

环境管理物质不使用证书
（原材料及原材料厂家 LIST）

向贵司销售的零部件及组件的使用材料、包装材料等中未使用 **DLK《环境管理物质技术标准》（508000-D-002）**要求的管理物质（禁止使用对象）及其用途，特此证明。

且：零部件及组件的使用在材料，由以下成分构成。特此报告

1.零件料号：DPT2PA-20BM4RN10

以下清单所列均质原材料为本产品中所用到的所有原材料

ITEM	Raw Material	Raw Material Supplier	Cd	Pb	Cr^{6+}	Hg	PBB/PBDE	Cl	Br	PAHs	第三方测试报告号码
			含量(ppm)	含量(ppm)	含量(ppm)	含量(ppm)	含量(ppm)	含量(ppm)	含量(ppm)	含量(ppm)	
Housing	LCP	摩登	N.D	N.D	N.D	N.D	N.D	N.D	N.D		SHAEC24013601901
Contact/ Shell	C2680	广铜	N.D	35	N.D	N.D	N.D				CANEC25002788913
Plating Sn	Matte Sn	长风	N.D	27	N.D	N.D	N.D				SHAEC24013616009
Plating Au	Au	长风	N.D	12	N.D	N.D	N.D				SHAEC24013616006
Plating Ni	Ni	长风	N.D	N.D	N.D	N.D	N.D				SHAEC24013616007

2、 ICP 测试对象物质（塑料（含橡胶）涂料、油墨和线材料中的镉和铅）测试要求的 ICP 数据另附。ICP 测试对象物质的成分表或 MSDS 另附。

备注：请填写该类零部件用到的所有部件、原材料、辅助材料的详细信息。

必须详细、正确的填写部件、原材料、辅助材料的供应商名称、材料型号

主管/职位：

公司全称：昆山德力康电子科技有限公司

公司公章：