☐ **Preliminary Specification**
■ **Final Specification**

Module	**18.5 Inch Color TFT-LCD**
Model Name	**G185HAN01.0(04)** 3TFTLCD18F2(T0210)

Company	**Approved by**	**Date**
	Elsie Kuo	2023/10/11
Checked & Approved by	**Prepared by**	
設計驗證 工程課 2025 -03- 28 發行	Eugene Yu	2023/10/11
	General Display Business Unit / AUO Display Plus Corporation	

AUO Display Plus Confidential For ACMEPOINT Internal Use Only 2023/11/14 16:46:34

© AUO Display Plus Corporation Proprietary

For ACMEPOINT internal use only - provided by kevintsai on 2023/11/14

Contents

1.0 Handling Precautions 4
2.0 General Description 5
2.1 Display Characteristics 5
2.2 Optical Characteristics 6
3.0 Functional Block Diagram 9
4.0 Absolute Maximum Ratings 10
4.1 TFT LCD Module 10
4.2 Absolute Ratings of Environment 10
5.0 Electrical characteristics 11
5.1 TFT LCD Module 11
5.1.1 Power Specification 11
5.1.2 Signal Electrical Characteristics 12
5.2 Backlight Unit 13
6.0 Signal Characteristic 14
6.1 Pixel Format Image 14
6.2 The input data format 15
6.3 Signal Description 16
6.4 Timing Characteristics 18
6.5 Timing diagram 19
6.6 Power ON/OFF Sequence 20
7.0 Connector & Pin Assignment 21
7.1 TFT LCD Module 21
7.2 LED Backlight Unit: LED Driver Connector 21
7.3 LED Driver Connector Pin Assignment 22
8.0 Reliability Test 23
9.0 Shipping Label & Packaging 24
9.1 Shipping Label 24
9.2 Packaging 25
9.3 Palletizing 26
10.0 Mechanical Characteristics 27
11 Safety 29
11.1 Keen Edge Requirements 29
11.2 Materials 29
11.3 Capacitors 29
11.4 International Safety Standard Compliance 29

AUO Display Plus Confidential
For ACMEPOINT Internal Use Only
2023/11/14 16:46:34

© AUO Display Plus Corporation Proprietary

For ACMEPOINT internal use only - provided by kevintsai on 2023/11/14

Record of Revision

Version & Date	Page	Old description	New Description
0.1 / 2023/01/30		First Edition	
0.2 / 2023/07/10	5 13	Power Consumption (VDD line + LED line) [Watt] 20. 15W Symbol / Parameter / Min. / Typ. / Max. / Unit / Remark VCC / Input Voltage / 10.8 / 12 / 13.2 / [Volt] Ivcc / Input Current / 1.07 / 1.37 / [A] / 100% PWM Duty Pvcc / Power Consumption / 12.84 / 14.8 / [Watt] / 100% PWM Duty	Update power [Watt] 20. 95W (max) eter / Min. / Typ. / Max. / Unit / Remark oltage / 10.8 / 12 / 13.2 / [Volt] rrent / 1.07 / 1.3 / [A] / VCC=12V, 100% PWM Duty sumption / 12. 84 / 15. 6 / [Watt] / VCC=12V, 100% PWM Duty
	6	Color / Chromaticity Coordinates (CIE) Red x 0.596 0.646 0.696 Red y 0.283 0.333 0.383 Green x 0.255 0.305 0.355 Green y 0.565 0.615 0.665 Blue x 0.105 0.155 0.205 Blue y 0.010 0.060 0.110 Color Coordinates (CIE) White White x 0.249 0.299 0.349 White y 0.265 0.315 0.365	Update Color / Chromaticity Color / Chromaticity Coordinates (CIE) Red x 0.594 0.644 0.694 Red y 0.282 0.332 0.382 Green x 0.244 0.294 0.344 Green y 0.556 0.606 0.656 Blue x 0.096 0.146 0.196 Blue y 0.020 0.070 0.120 Color Coordinates (CIE) White White x 0.249 0.299 0.349 White y 0.265 0.315 0.365
	25	9.2 Packaging 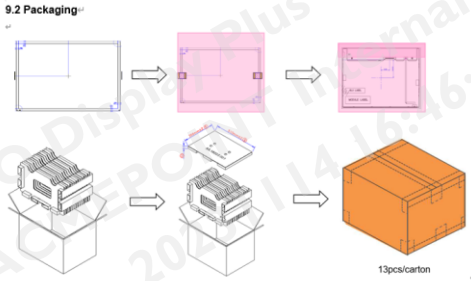 13pcs/carton Max capacity : 13 TFT-LCD module per carton Max weight: 18.5 kg per carton Outside dimension of carton: 530mm(L)* 384mm(W)*355mm(H) Pallet size : 1180 mm *1150 mm * 132mm Box stacked By air_max : (2 *3) *4 layers , one pallet put 24 boxes , total 312pcs module By sea_max : (2 *3) *4 layers + (2 *3) *1 layers , two pallet put 30 boxes , total 390pcs module By sea_HQ_max : (2 *3) *4 layers+(2 *3) *2 layers, two pallet put 36 boxes, total 468pcs module	Update Packing content 9.2 Packaging 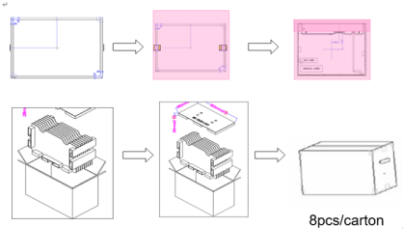 8pcs/carton Max capacity : 8 TFT-LCD module per carton Max weight: 17 kg per carton Outside dimension of carton: 520mm(L)* 280mm(W)*352mm(H) Pallet size: 1150 mm *1100 mm * 132mm Box stacked By air_max : (2 *4) *4 layers , one pallet put 32 boxes , total 256pcs module By sea_max : (2 *4) *4 layers + (2 *4) *1 layers , two pallet put 40 boxes , total320pcs module By sea_HQ_max : (2 *4) *4 layers+(2 *4) *2 layers, two pallet put 48 boxes, total 384pcs module
	26	9.3 Palletizing 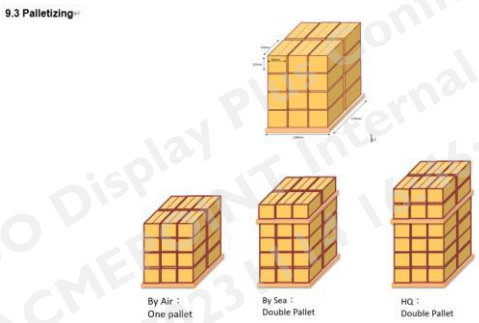 By Air : One pallet By Sea : Double Pallet HQ : Double Pallet	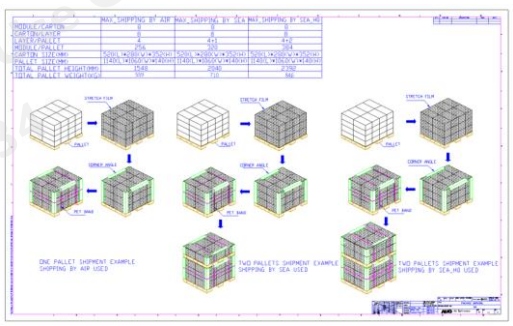
1.0 2023/08/23	11	* 5.1.1 Power Specification Input power specifications are as follows: Symbol / Parameter / Min / Typ / Max / Unit / Conditions VDD / Logic/LCD Drive Voltage / 4.5 / 5.0 / 5.5 / [Volt] / +/-10% IDD / Input Current / -- / 0.89 / 1.07 / [A] / VDD= 5.0V, All White Pattern At 60Hz, PDD / VDD Power / -- / 4.45 / 5.35 / [Watt] / VDD= 5.0V, All White Pattern At 60Hz IRush / Inrush Current / -- / 2.7 / 3.4 / [A] / Note 1 VDDrp / Allowable Logic/LCD Drive Ripple Voltage / -- / -- / 300 / [mV] p-p / VDD= 5.0V, All White Pattern At 60Hz	* 5.1.1 Power Specification Input power specifications are as follows: Symbol / Parameter / Min / Typ / Max / Unit / Conditions VDD / Logic/LCD Drive Voltage / 4.5 / 5.0 / 5.5 / [Volt] / +/-10% IDD / Input Current / -- / 0.89 / 1.07 / [A] / VDD= 5.0V, All White Pattern At 60Hz, PDD / VDD Power / -- / 4.45 / 5.35 / [Watt] / VDD= 5.0V, All White Pattern At 60Hz IRush / Inrush Current / -- / 2 / 2.5 / [A] / Note 1 VDDrp / Allowable Logic/LCD Drive Ripple Voltage / -- / -- / 300 / [mV] p-p / VDD= 5.0V, All White Pattern At 60Hz
1.1 2023/10/11	25	Pallet size: 1150 mm *1100 mm * 132mm	Update Packing info. Pallet size: 1150 mm *1070 mm * 132mm

© AUO Display Plus Corporation Proprietary

For ACMEPOINT internal use only - provided by kevintsai on 2023/11/14

1.0 Handling Precautions

1) Since front polarizer is easily damaged, pay attention not to scratch it.
2) Be sure to turn off power supply when inserting or disconnecting from input connector.
3) Wipe off water drop immediately. Long contact with water may cause discoloration or spots.
4) When the panel surface is soiled, wipe it with absorbent cotton or other soft cloth.
5) Since the panel is made of glass, it may break or crack if dropped or bumped on hard surface.
6) Since CMOS LSI is used in this module, take care of static electricity and insure human earth when handling.
7) Do not open or modify the Module Assembly.
8) Do not press the reflector sheet at the back of the module to any directions.
9) In case if a Module has to be put back into the packing container slot after it was taken out from the container, do not press the center of LED lightbar edge. Instead, press at the far ends of the LED light bar edge softly. Otherwise the TFT Module may be damaged.
10) At the insertion or removal of the Signal Interface Connector, be sure not to rotate nor tilt the Interface Connector of the TFT Module.
11) After installation of the TFT Module into an enclosure, do not twist nor bend the TFT Module even momentarily. While designing the enclosure, it should be taken into consideration that no bending/twisting forces are applied to the TFT Module from outside. Otherwise the TFT Module may be damaged.
12) Small amount of materials having no flammability grade is used in the LCD module. The LCD module should be supplied by power complied with requirements of Limited Power Source (IEC60950-1 or UL60950-1), or be applied exemption.

AUO Display Plus Confidential
For ACMEPOINT Internal Use Only
2023/11/14 16:46:34

© AUO Display Plus Corporation Proprietary

For ACMEPOINT internal use only - provided by kevintsai on 2023/11/14

2.0 General Description

This specification applies to the 18.5 inch-wide Color AHVA (IPS-like) TFT-LCD Module G185HAN01.0. The display supports the FHD [1920(H) x 1080(V)] screen format and 16.7M colors (True 8 bit). All input signals are LVDS interface comaptible.

2.1 Display Characteristics

The following items are characteristics summary on the table under 25°C condition:

ITEMS	Unit	SPECIFICATIONS
Screen Diagonal	[mm]	469.16(18.47")
Active Area	[mm]	408.96 (H) x 230.04 (V)
Pixels H x V		1920x1080
Pixel Pitch	[um]	213 (per one triad) × 213
Pixel Arrangement		R.G.B. Vertical Stripe
Display Mode		AHVA mode, Normally black
White Luminance (Center)	[cd/m^2]	350 cd/m^2 (Typ.)
Contrast Ratio		1000 (Typ.)
Optical Response Time	[msec]	20ms
Nominal Input Voltage VDD	[Volt]	5 V (Typ)
Power Consumption (VDD line + LED line)	[Watt]	20.95 W(max)
Weight	[Grams]	1750 (Typ)
Physical Size	[mm]	430.4 (W) x 254.6 (H) Typ. x 12.0(D)Typ
Electrical Interface		Dual LVDS
Support Color		16.7M colors, True 8 bit
Surface Treatment		Anti-Glare, 3H
RoHS Compliance		RoHS Compliance
Temperature Range Operating Storage (Shipping)	 [°C] [°C]	 -30~ 80 -30~ 80

© AUO Display Plus Corporation Proprietary

For ACMEPOINT internal use only - provided by kevintsai on 2023/11/14

2.2 Optical Characteristics

The optical characteristics are measured under stable conditions at 25 °C:

Item	Unit	Conditions	Min.	Typ.	Max.	Note
Viewing Angle	[degree]	Horizontal (Right) CR >10 (Left)		89 89	- -	*2*
		Vertical (Up) CR > 10 (Down)		89 89	- -	
Contrast ratio		Normal Direction	800	1000	-	*3*
Response Time	[msec]	Raising Time (T_{rR})		10	20	*4*
		Falling Time (T_{rF})		10	20	
		Raising + Falling		20	40	
Color / Chromaticity Coordinates (CIE)		Red x	0.594	0.644	0.694	*5*
		Red y	0.282	0.332	0.382	
		Green x	0.244	0.294	0.344	
		Green y	0.556	0.606	0.656	
		Blue x	0.096	0.146	0.196	
		Blue y	0.020	0.070	0.120	
Color Coordinates (CIE) White		White x	0.249	0.299	0.349	
		White y	0.265	0.315	0.365	
Central Luminance	[cd/m^2]		280	350		*6*
Luminance Uniformity	[%]		80	85		*7*
Color Gamut	%			72		

AUO Display Plus Confidential
For ACMEPOINT Internal Use Only
2023/11/14 16:46:34

For ACMEPOINT internal use only - provided by kevintsai on 2023/11/14

Note 1: Measurement method

The LCD module should be stabilized at given temperature for 30 minutes to avoid abrupt temperature change during measuring (at surface 35°C). In order to stabilize the luminance, the measurement should be executed after lighting Backlight for 30 minutes in a stable, windless and dark room.

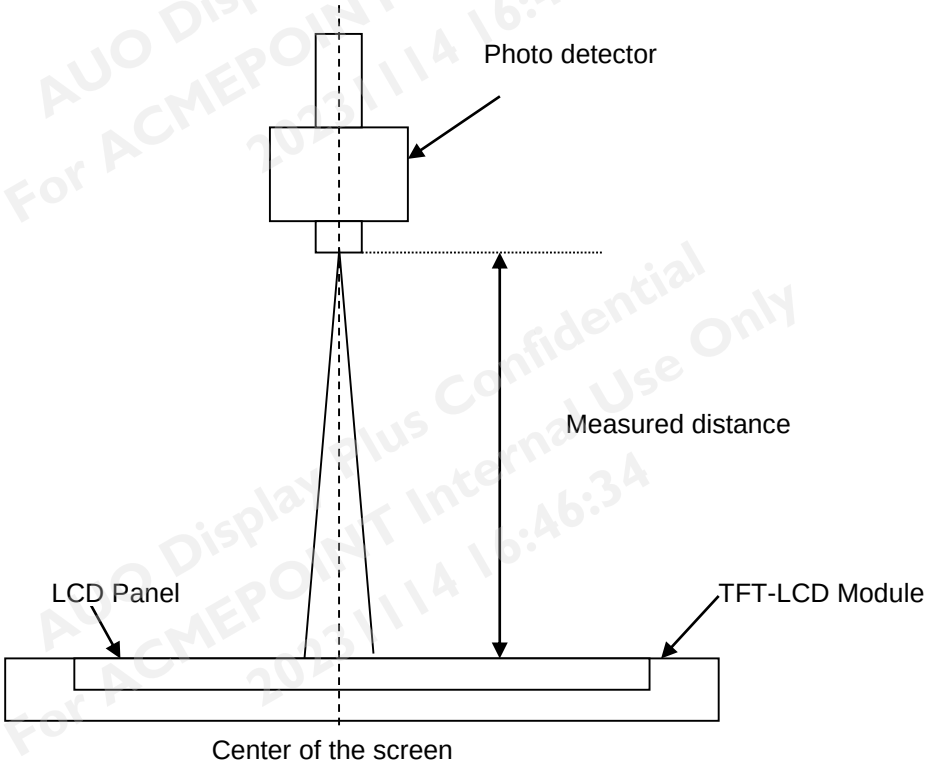

Note 2: Definition of viewing angle measured by ELDIM (EZContrast 88)

Viewing angle is the measurement of contrast ratio ≧10, at the screen center, over a 180° horizontal and 180° vertical range (off-normal viewing angles). The 180° viewing angle range is broken down as follows; 90° (θ) horizontal left and right and 90° (Φ) vertical, high (up) and low (down). The measurement direction is typically perpendicular to the display surface with the screen rotated about its center to develop the desired measurement viewing angle.

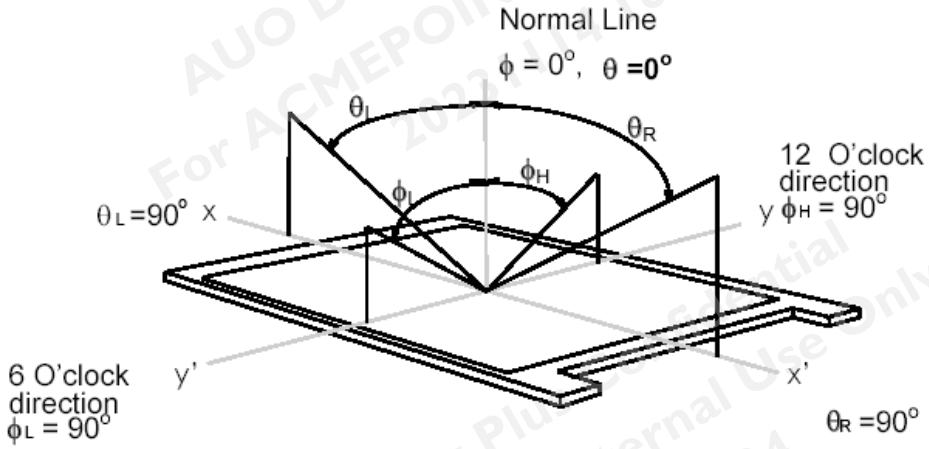

Note 3: Contrast ratio is measured by TOPCON SR-3

© AUO Display Plus Corporation Proprietary

For ACMEPOINT internal use only - provided by kevintsai on 2023/11/14

Note 4: Definition of Response time measured by Westar TRD-100A

The output signals of photo detector are measured when the input signals are changed from “Full Black” to “Full White” (rising time, Tr_R), and from “Full White” to “Full Black” (falling time, Tf_F), respectively. The response time is interval between the 10% and 90% (1 frame at 60 Hz) of amplitudes.
$Tr_R + Tf_F$ = 20 msec (typ.).

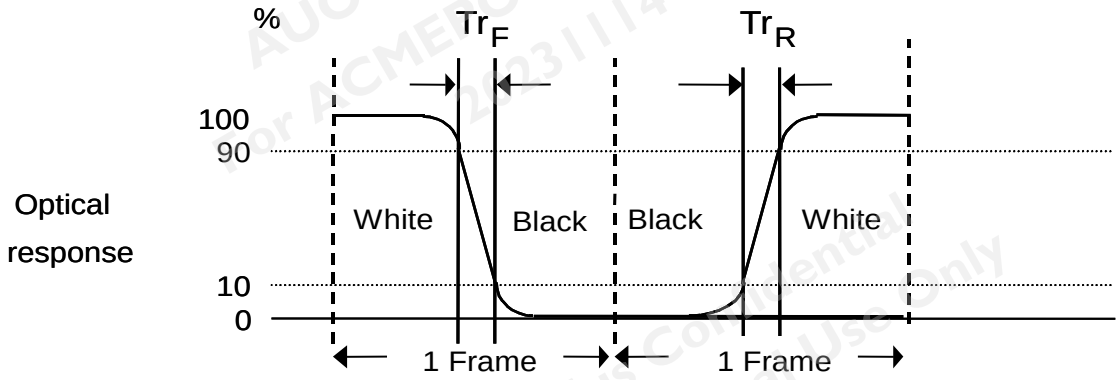

Note 5: Color chromaticity and coordinates (CIE) is measured by TOPCON SR-3

Note 6: Central luminance is measured by TOPCON SR-3

Note 7: Luminance uniformity of these 9 points is defined as below and measured by TOPCON SR-3

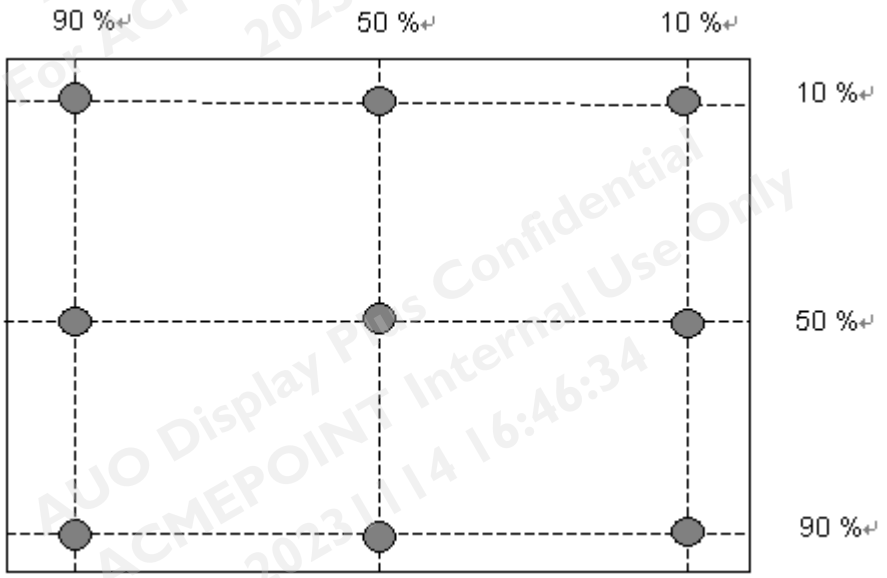

$$\text{Uniformity} = \frac{\text{Minimum Luminance in 9 points (1 - 9)}}{\text{Maximum Luminance in 9 Points (1 - 9)}}$$

© AUO Display Plus Corporation Proprietary

For ACMEPOINT internal use only - provided by kevintsai on 2023/11/14

3.0 Functional Block Diagram

The following diagram shows the functional block of the 18.5 inch Color TFT-LCD Module:

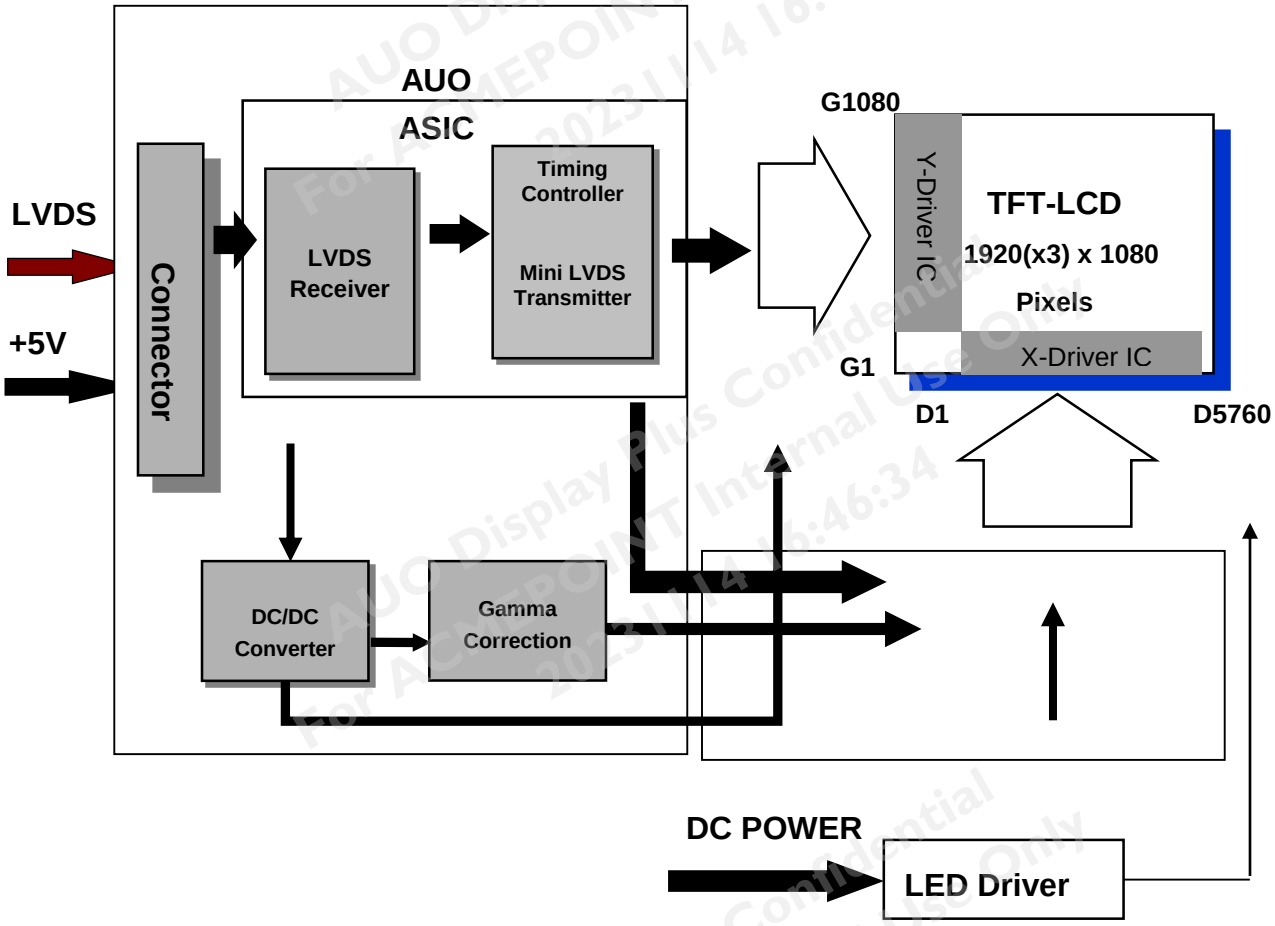

I/F PCB Interface:
FI-XB30SSRLA-HF-16-R3500 (JAE)
Mating Type:
FI-X30HL or FI-X30C2L-NPB

© AUO Display Plus Corporation Proprietary

For ACMEPOINT internal use only - provided by kevintsai on 2023/11/14

4.0 Absolute Maximum Ratings

Absolute maximum ratings of the module are as following:

4.1 TFT LCD Module

Item	Symbol	Min	Max	Unit	Conditions
Logic/LCD Drive Voltage	VDD	-0.3	+5.5	[Volt]	***Note 1,2***

4.2 Absolute Ratings of Environment

Item	Symbol	Min.	Max.	Unit	Conditions
Operating Temperature	TOP	-30	80	[°C]	***Note 3 & 4***
Operation Humidity	HOP	5	95	[%RH]	
Storage Temperature	TST	-30	80	[°C]	
Storage Humidity	HST	5	95	[%RH]	

Note 1: With in Ta (25 °C)
Note 2: Permanent damage to the device may occur if exceeding maximum values
Note 3: For quality perfermance, please refer to AUO IIS(Incoming Inspection Standard).

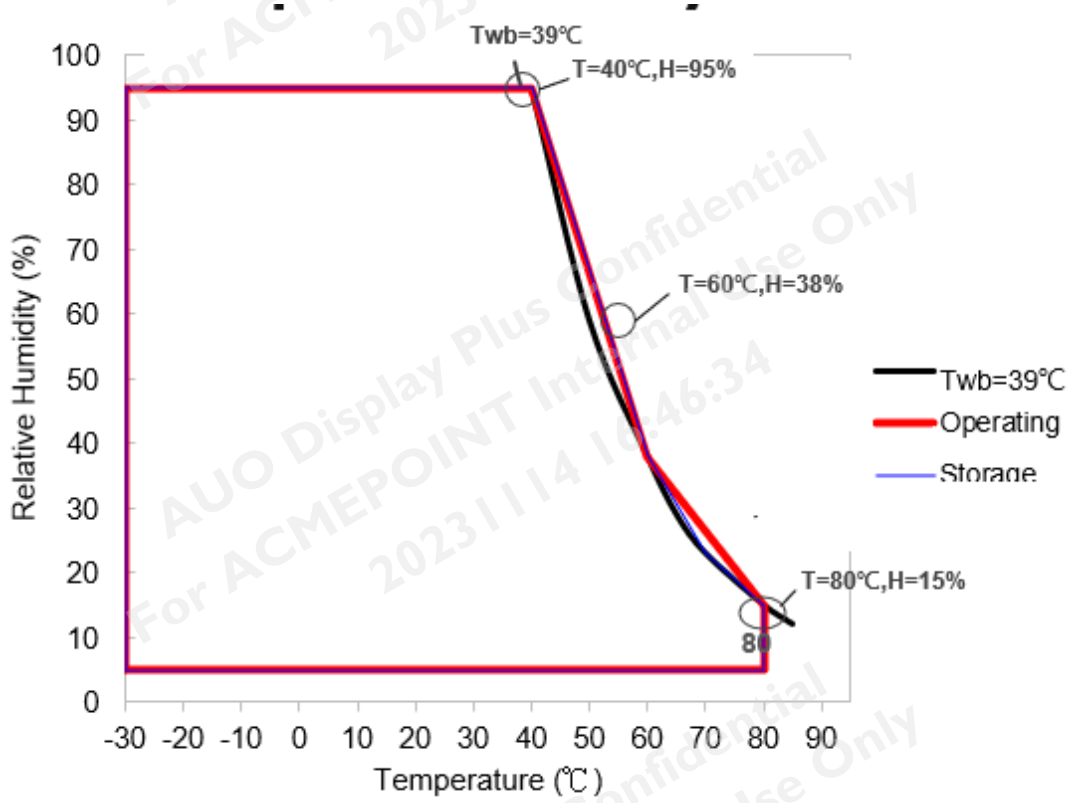

© AUO Display Plus Corporation Proprietary

For ACMEPOINT internal use only - provided by kevintsai on 2023/11/14

5.0 Electrical characteristics

5.1 TFT LCD Module

5.1.1 Power Specification

Input power specifications are as follows:

Symbol	Parameter	Min	Typ	Max	Unit	Conditions
VDD	Logic/LCD Drive Voltage	4.5	5.0	5.5	[Volt]	+/-10%
IDD	Input Current	-	0.89	1.07	[A]	VDD= 5.0V, All White Pattern At 60Hz,
PDD	VDD Power	-	4.45	5.35	[Watt]	VDD= 5.0V, All White Pattern At 60Hz
IRush	Inrush Current	-	2	2.5	[A]	Note 1
VDDrp	Allowable Logic/LCD Drive Ripple Voltage	-	-	300	[mV] p-p	VDD= 5.0V, All White Pattern At 60Hz

Note 1: Measurement conditions:

The duration of rising time of power input is 470us.

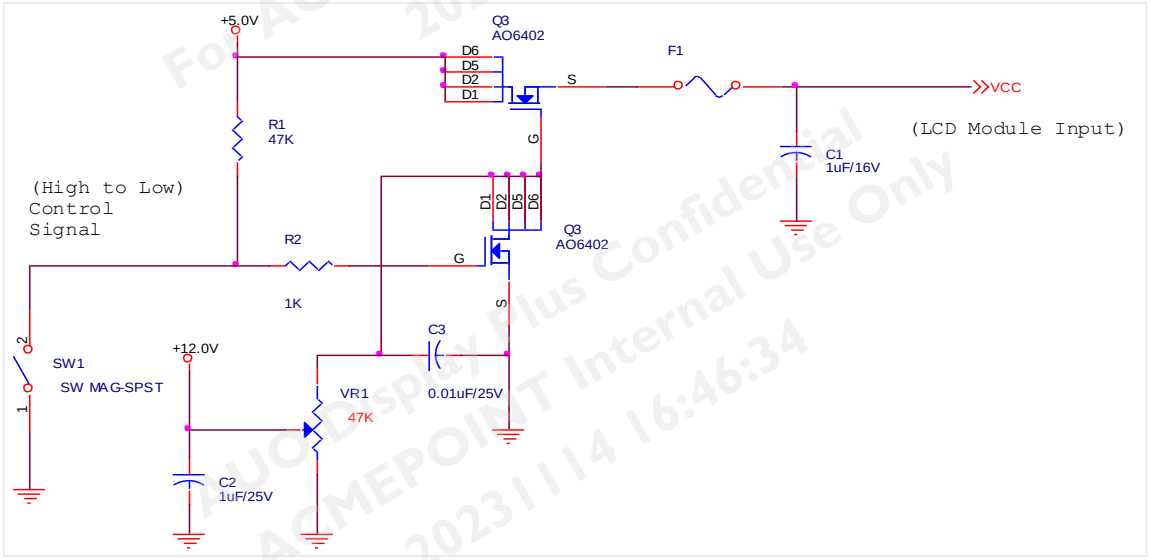

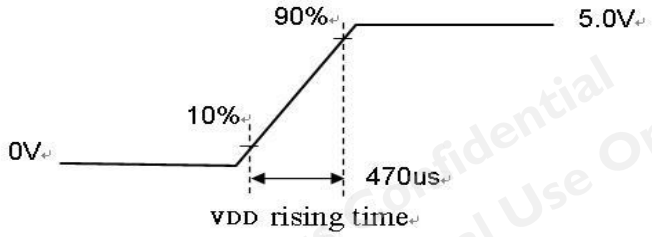

© AUO Display Plus Corporation Proprietary

For ACMEPOINT internal use only - provided by kevintsai on 2023/11/14

5.1.2 Signal Electrical Characteristics

Input signals shall be low or Hi-Z state when VDD is off. Please refer to specifications of SN75LVDS82DGG (Texas Instruments) in detail.

Characteristics of each signal are as follows:

Symbol	Parameter	Min	Typ	Max	Units	Condition
VTH	Differential Input High Threshold	-		100	[mV]	VICM = 1.2V ***Note 1***
VTL	Differential Input Low Threshold	-100		-	[mV]	VICM = 1.2V ***Note 1***
|VID|	Input Differential Voltage	100	400	600	[mV]	VICM = 1.2V ***Note 1***
VICM	Differential Input Common Mode Voltage	1.125	-	1.375	[V]	VTH-VTL = 200MV (max) ***Note 1***

Note 1: LVDS Signal Waveform

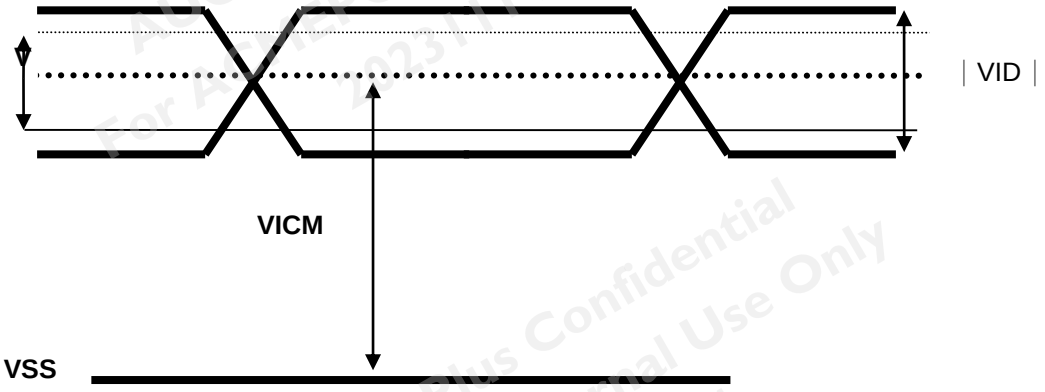

© AUO Display Plus Corporation Proprietary

For ACMEPOINT internal use only - provided by kevintsai on 2023/11/14

5.2 Backlight Unit

Following characteristics are measured under a stable condition at 25 °C (Room Temperature):

Symbol	Parameter	Min.	Typ.	Max.	Unit	Remark
VCC	Input Voltage	10.8	12	13.2	[Volt]	
I_{VCC}	Input Current		1.07	1.3	[A]	VCC=12V, 100% PWM Duty
P_{VCC}	Power Consumption		12.84	15.6	[Watt]	VCC=12V,100% PWM Duty
Irush LED	Inrush Current	-		3	[A]	at rising time=470us
VLED on/off	On Control Voltage	3	5	5.5	Volt	
	Off Control Voltage			0.8	Volt	
F_{PWM}	Dimming Frequency	200	-	20k	[Hz]	
	Swing Voltage	3	3.3	5	V	
	High Voltage	3	3.3	5	Volt	
	Low Voltage			0.8	Volt	
	Dimming Duty 200~5K	5	-	100	%	
	Dimming Duty 5K~20K	15	-	100	%	
I_F	LED Forward Current		58		mA	Ta = 25 °C
V_F	LED Forward Voltage	-	3.0	3.3	Volt	I_F =58mA,Ta = 25°C
P_{LED}	LED Power Consumption	-		10.72	Watt	I_F =58mA, Ta = 25°C
LED Lifetime		50,000			Hrs	I_F=58mA, Ta= 25°C

Note 1: Ta means ambient temperature of TFT-LCD module.

Note 2: VCC, Ivcc, P_{VCC}, Irush LED are defined for LED B/L.(100% duty of PWM dimming)

Note 3: I_F, V_F , P_{LED} are defined for single LED.

Note 4: If G185HAN01.0 module is driven by high current or at high ambient temperature & humidity condition. The operating life will be reduced.

Note 5: Operation life means brightness goes down to 50% initial brightness. Minimum operating life time is estimated data.

Note 6: Each LED light bar consists of 56 pcs LED package (7 strings x 8pcs / string)

© AUO Display Plus Corporation Proprietary

For ACMEPOINT internal use only - provided by kevintsai on 2023/11/14

6.0 Signal Characteristic

6.1 Pixel Format Image

Following figure shows the relationship of the input signals and LCD pixel format.

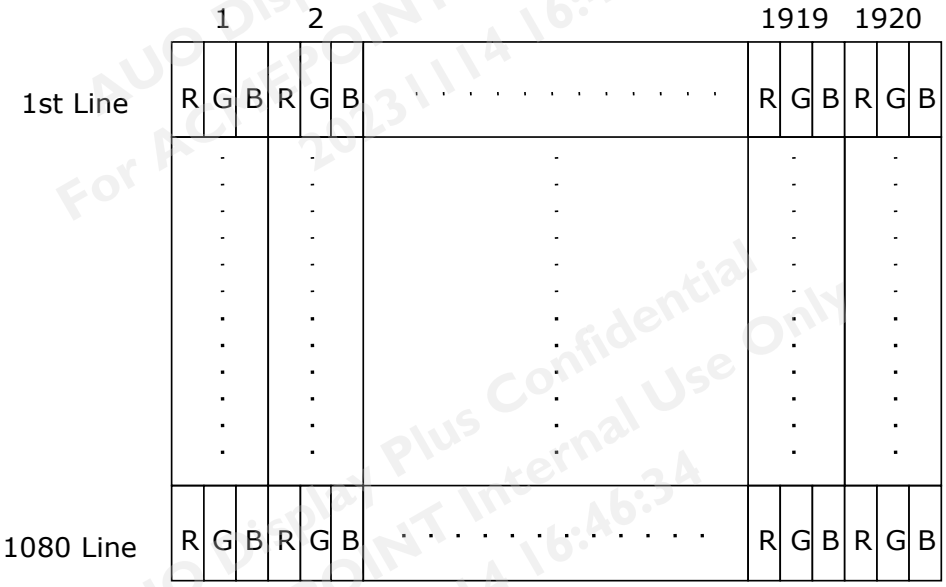

AUO Display Plus Confidential
For ACMEPOINT Internal Use Only
20231114 16:46:34

© AUO Display Plus Corporation Proprietary

For ACMEPOINT internal use only - provided by kevintsai on 2023/11/14

6.2 The input data format

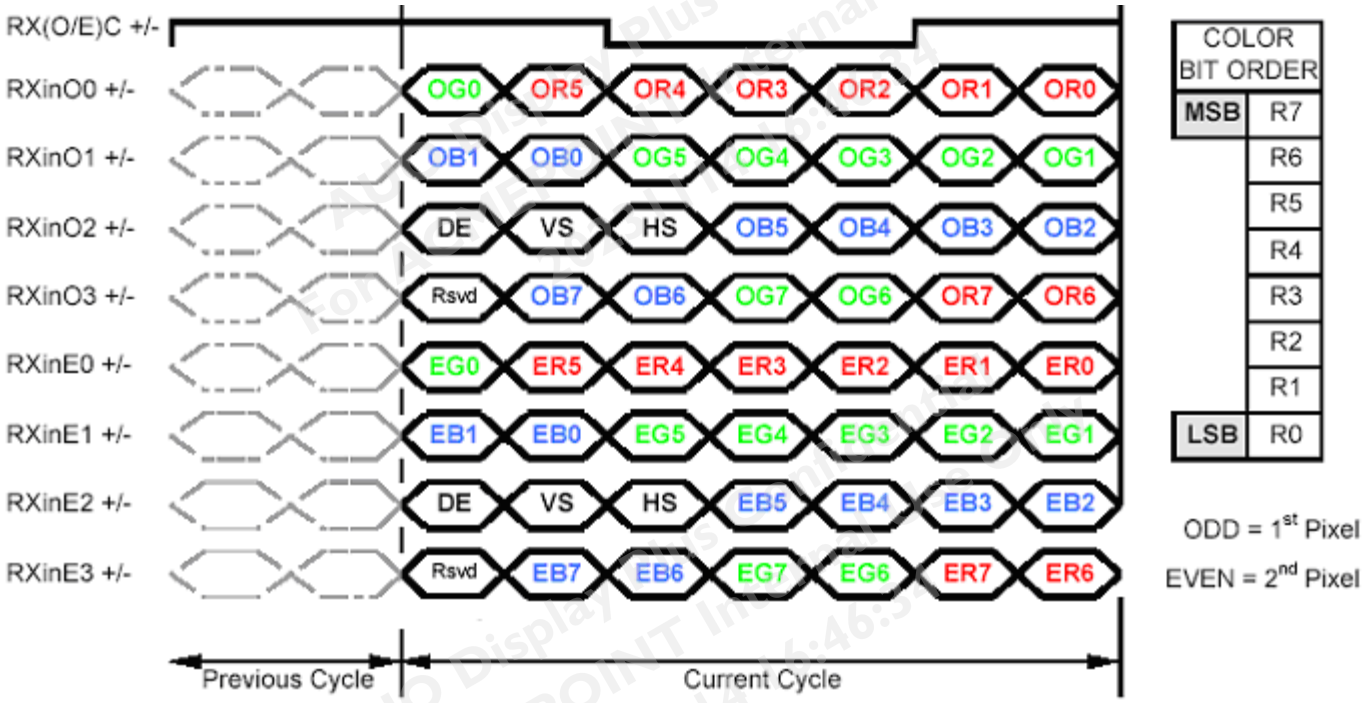

Note1: Normally DE mode only. VS and HS on EVEN channel are not used.

Note2: Please follow VESA.

Note3: 8-bits signal input.

© AUO Display Plus Corporation Proprietary

For ACMEPOINT internal use only - provided by kevintsai on 2023/11/14

6.3 Signal Description

The module using a pair of LVDS receiver **SN75LVDS82** / **SN75LVDS83** (Texas Instruments) or compatible. LVDS is a differential signal technology for LCD interface and high speed data transfer device. Transmitter shall be SN75LVDS83(negative edge sampling) or compatible**.** The first LVDS port(RxOxxx) transmits odd pixels while the second LVDS port(RxExxx) transmits even pixels.

PIN #	SIGNAL NAME	DESCRIPTION
1	RXOIN0-	Negative LVDS differential data input (Odd data)
2	RXOIN0+	Positive LVDS differential data input (Odd data)
3	RXOIN1-	Negative LVDS differential data input (Odd data)
4	RXOIN1+	Positive LVDS differential data input (Odd data)
5	RXOIN2-	Negative LVDS differential data input (Odd data, H-Sync,V-Sync,DSPTMG)
6	RXOIN2+	Positive LVDS differential data input (Odd data, H-Sync,V-Sync,DSPTMG)
7	GND	Power Ground
8	RXOCLKIN-	Negative LVDS differential clock input (Odd clock)
9	RXOCLKIN+	Positive LVDS differential clock input (Odd clock)
10	RXOIN3-	Negative LVDS differential data input (Odd data)
11	RXOIN3+	Positive LVDS differential data input (Odd data)
12	RXEIN0-	Negative LVDS differential data input (Even data)
13	RXEIN0+	Positive LVDS differential data input (Even data)
14	GND	Power Ground
15	RXEIN1-	Negative LVDS differential data input (Even data)
16	RXEIN1+	Positive LVDS differential data input (Even data)
17	GND	Power Ground
18	RXEIN2-	Negative LVDS differential data input (Even data)
19	RXEIN2+	Positive LVDS differential data input (Even data)
20	RXECLKIN-	Negative LVDS differential clock input (Even clock)
21	RXECLKIN+	Positive LVDS differential clock input (Even clock)
22	RXEIN3-	Negative LVDS differential data input (Even data)
23	RXEIN3+	Positive LVDS differential data input (Even data)
24	GND	Power GND
25	NC	NC
26	NC	NC
27	NC	NC
28	VDD	+5.0V Power Supply
29	VDD	+5.0V Power Supply
30	VDD	+5.0V Power Supply

Note1: Start from left side

© AUO Display Plus Corporation Proprietary

For ACMEPOINT internal use only - provided by kevintsai on 2023/11/14

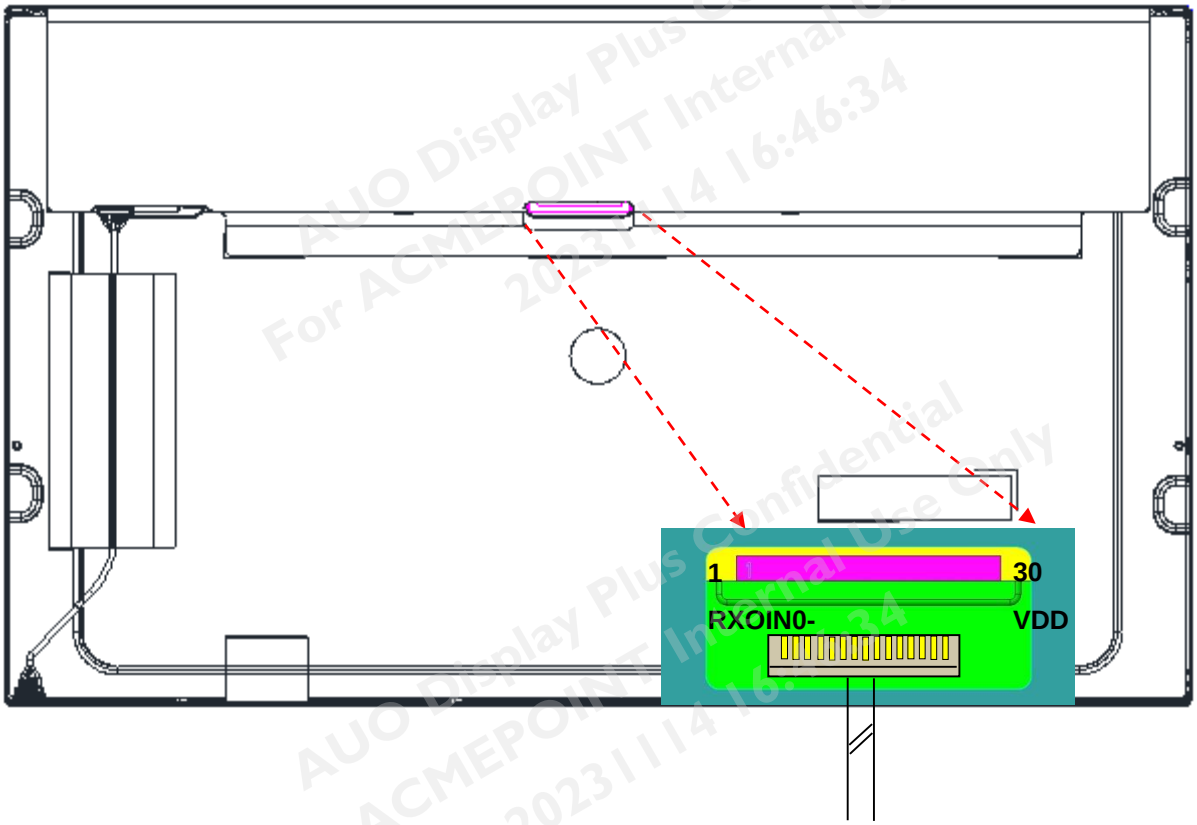

Note2: Input signals of clock shall be the same timing.

Note3: Please follow TV VESA Pin Assignment.

© AUO Display Plus Corporation Proprietary

For ACMEPOINT internal use only - provided by kevintsai on 2023/11/14

6.4 Timing Characteristics

Signal	Item	Symbol	Min	Typ	Max	Unit
V-section	Period	Tv	1090	1100	1160	Th
	Active	Tdisp(v)	1080	1080	1080	Th
	Blanking	Tbp(v)+Tfp(v)+PWvs	10	20	80	Th
H-section	Period	Th	1000	1088	1120	Tclk
	Active	Tdisp(h)	960	960	960	Tclk
	Blanking	Tbp(h)+Tfp(h)+PWhs	40	128	160	Tclk
Clock	Period	Tclk	11.76	13.89	15.38	ns
	Frequency	Freq.	60	72	87.5	MHz
Frame Rate	Frame Rate	1/Tv	50	60	75	Hz

Note 1: Only DE mode operation.
The input of Hsync & Vsync signal does not have an effect upon the LCD normal operation.
Note 2: The performance of the electro-optical characteristics may be influenced by variance of the vertical refresh rates.
Note 3: Horizontal period should be even.

AUO Display Plus Confidential
For ACMEPOINT Internal Use Only
2023/11/14 16:46:34

© AUO Display Plus Corporation Proprietary

For ACMEPOINT internal use only - provided by kevintsai on 2023/11/14

6.5 Timing diagram

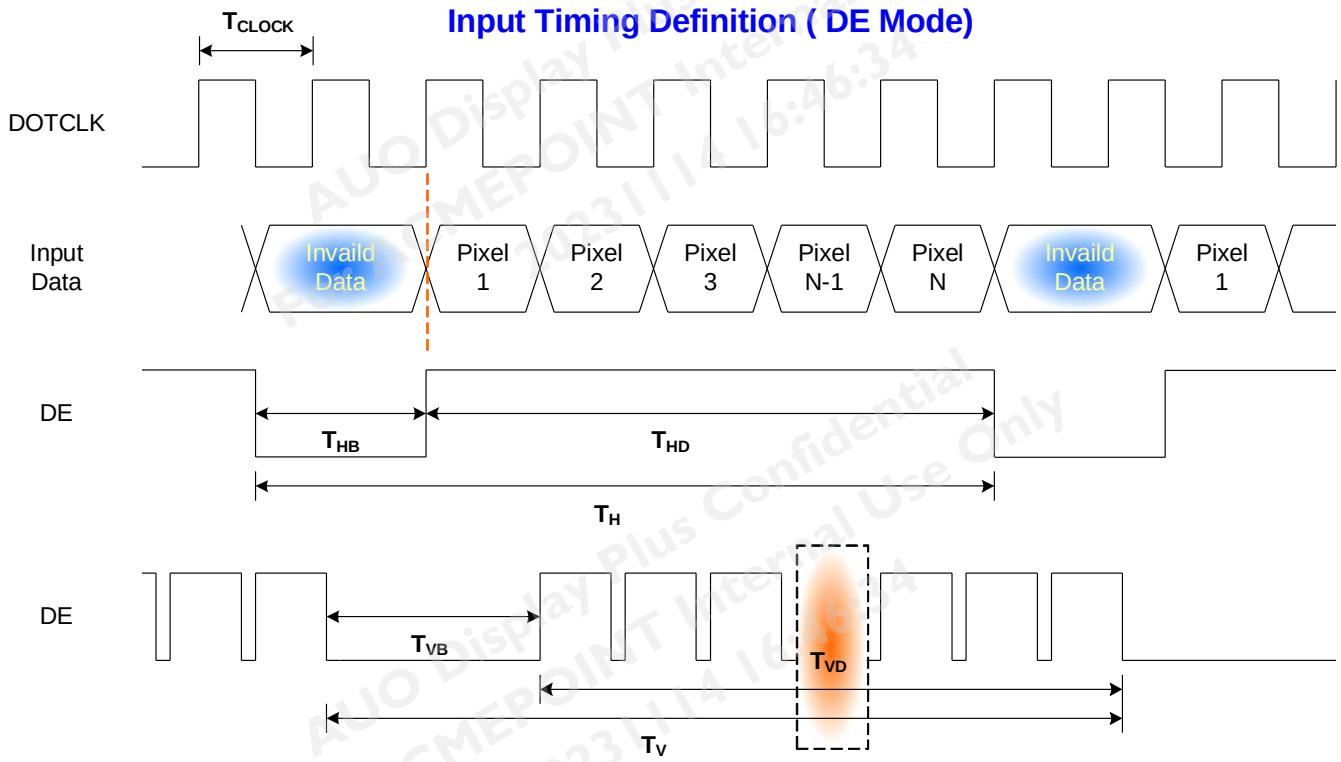

AUO Display Plus Confidential
For ACMEPOINT Internal Use Only
2023/11/14 16:46:34

For ACMEPOINT internal use only - provided by kevintsai on 2023/11/14

6.6 Power ON/OFF Sequence

VDD power and LED on/off sequence are as follows. Interface signals are also shown in the chart. Signals from any system shall be Hi-Z state or low level when VDD is off.

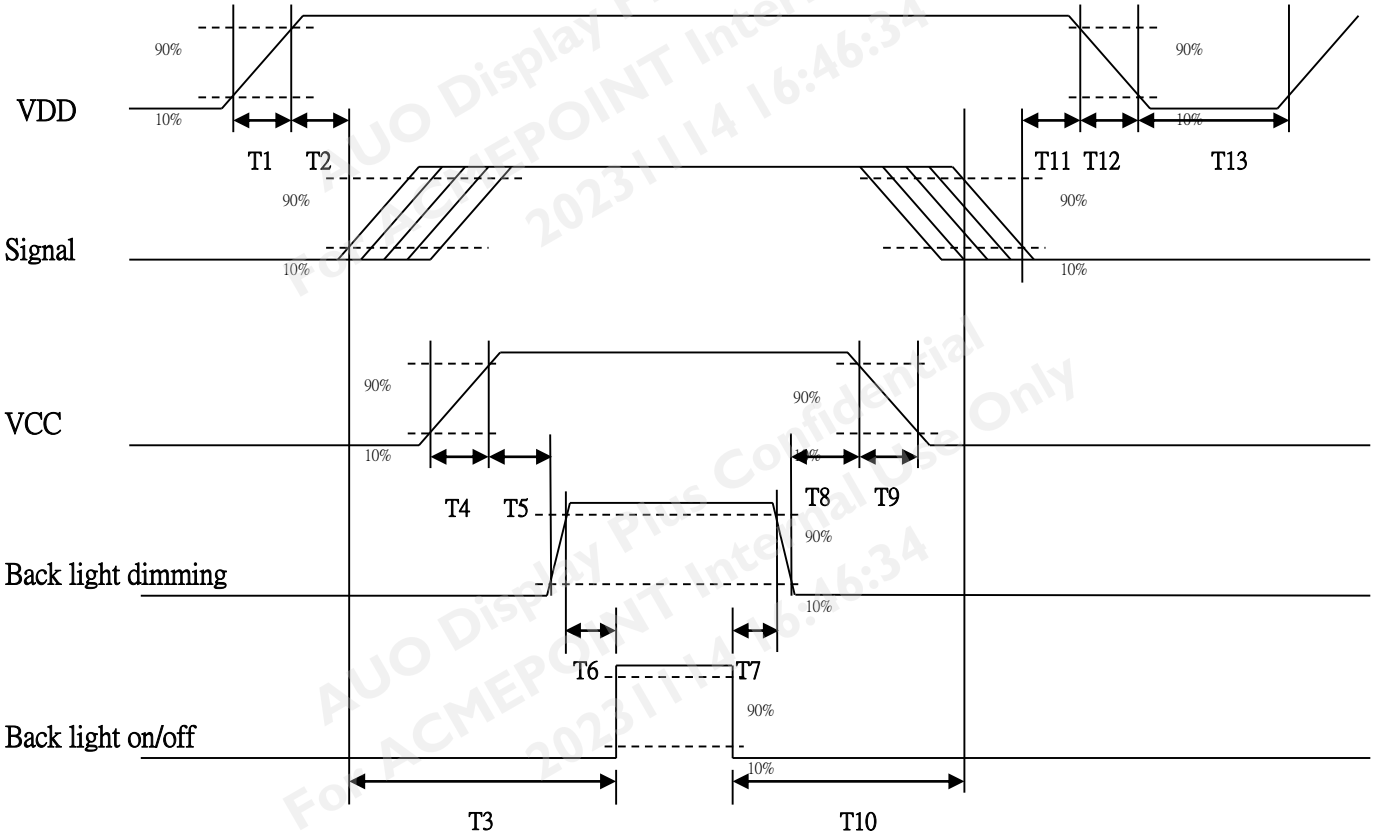

Power ON/OFF sequence timing

Parameter	Value			Units
	Min.	Typ.	Max.	
T1	0.5	-	10	[ms]
T2	0	40	50	[ms]
T3	200	-	-	[ms]
T4	0.5	-	10	[ms]
T5	10	-	-	[ms]
T6	10	-	-	[ms]
T7	0	-	-	[ms]
T8	10	-	-	[ms]
T9	-	-	10	[ms]
T10	110	-	-	[ms]
T11	0.5	16	50	[ms]
T12	-	-	100	[ms]
T13	1000	-	-	[ms]

© AUO Display Plus Corporation Proprietary

For ACMEPOINT internal use only - provided by kevintsai on 2023/11/14

7.0 Connector & Pin Assignment

Physical interface is described as for the connector on module. These connectors are capable of accommodating the following signals and will be following components.

7.1 TFT LCD Module

Connector Name / Designation	Interface Connector / Interface card
Manufacturer	JAE
Type Part Number	FI-XB30SSRLA-HF-16-R3500 (JAE)
Mating Housing Part Number	FI-X30HL or FI-X30C2L-NPB

7.1.1 Pin Assignment

Pin#	Signal Name	Pin#	Signal Name
1	RxOIN0-	2	RxOIN0+
3	RxOIN1-	4	RxOIN1+
5	RxOIN2-	6	RxOIN2+
7	GND	8	RxOCLKIN-
9	RxOCLKIN+	10	RxOIN3-
11	RxOIN3+	12	RxEIN0-
13	RxEIN0+	14	GND
15	RxEIN1-	16	RxEIN1+
17	GND	18	RxEIN2-
19	RxEIN2+	20	RxECLKIN-
21	RxECLKIN+	22	RxEIN3-
23	RxEIN3+	24	VSS
25	NC	26	NC
27	NC	28	VDD
29	VDD	30	VDD

7.2 LED Backlight Unit: LED Driver Connector

Connector Name / Designation	LED Connector
Manufacturer	STM or compatible
Connector Model Number	MSB24038P5D or compatible
Mating Connector Model Number	P24038P5 or compatible

© AUO Display Plus Corporation Proprietary

For ACMEPOINT internal use only - provided by kevintsai on 2023/11/14

7.3 LED Driver Connector Pin Assignment

Pin#	Symbol	Signal Name
1	VCC	12V
2	GND	GND
3	Enable	5V-On / 0V-Off
4	Dimming	PWM Dimming
5	NC	NC

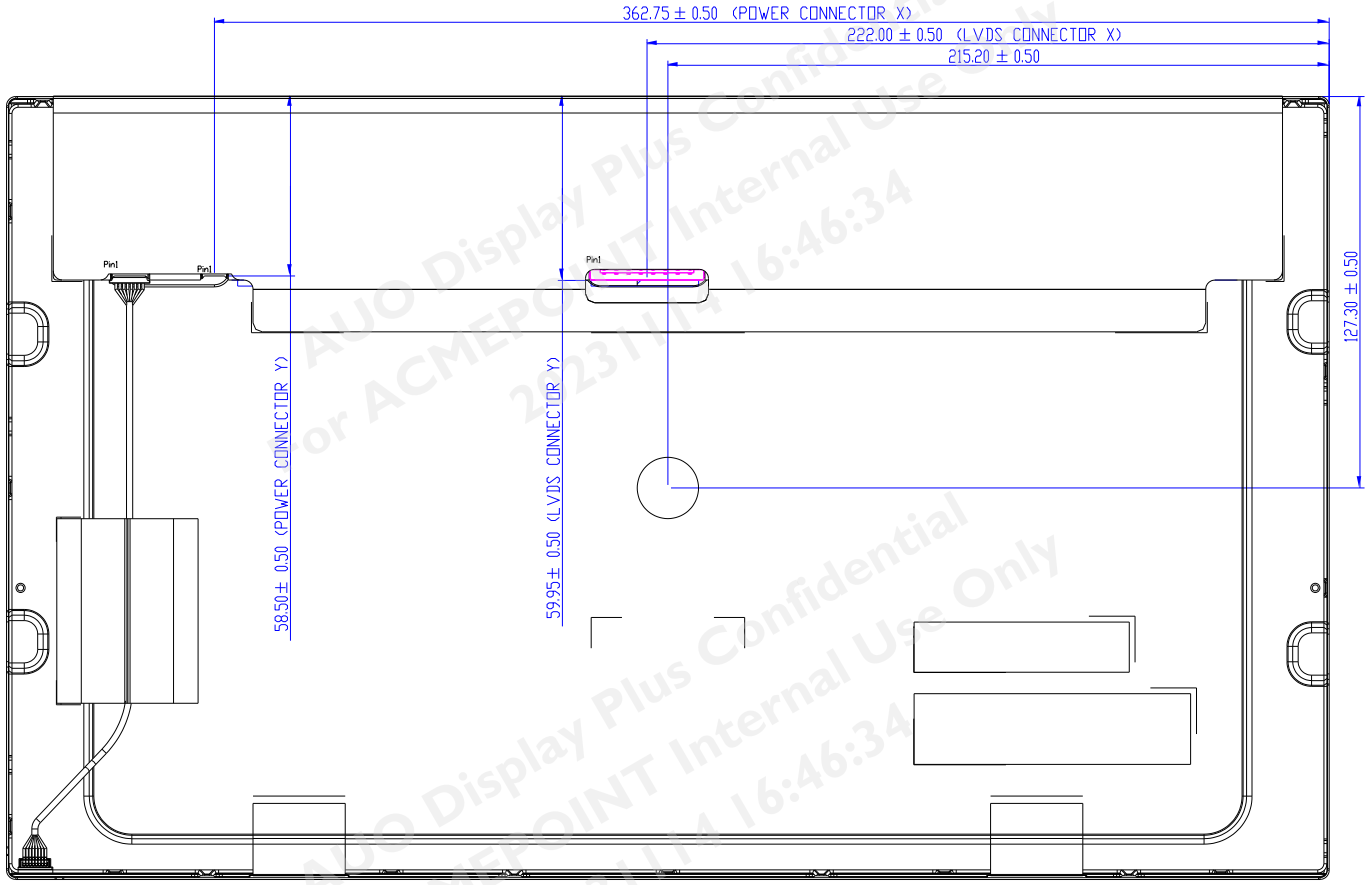

AUO Display Plus Confidential
For ACMEPOINT Internal Use Only
2023/11/14 16:46:34

For ACMEPOINT internal use only - provided by kevintsai on 2023/11/14

8.0 Reliability Test

Environment test conditions are listed as following table.

Items	Required Condition	Note
Temperature Humidity Bias (THB)	Ta= 50ºC, 80%RH, 300hours	
High Temperature Operation (HTO)	Ta= 80ºC, 300hours	*3*
Low Temperature Operation (LTO)	Ta= -30ºC, 300hours	
High Temperature Storage (HTS)	Ta= 80ºC, 300hours	
Low Temperature Storage (LTS)	Ta= -30ºC, 300hours	
Vibration Test (Non-operation)	Acceleration: 1.5 G Wave: Random Frequency: 10 - 200 Hz Sweep: 30 Minutes each Axis (X, Y, Z)	
Shock Test (Non-operation)	Acceleration: 50 G Wave: Half-sine Active Time: 20 ms Direction: ±X, ±Y, ±Z (one time for each Axis)	
Drop Test	Height: 45.7 cm, package test	
Thermal Shock Test (TST)	-20ºC /30min, 60ºC /30min, 100 cycles	***1***
On/Off Test	On/10sec, Off/10sec, 30,000 cycles	
ESD (Electro Static Discharge)	Contact Discharge: ± 8KV, 150pF(330Ω) 1sec, 8 points, 25 times/ point.	***2***
	Air Discharge: ± 15KV, 150pF(330Ω) 1sec 8 points, 25 times/ point.	

Note 1: The TFT-LCD module will not sustain damage after being subjected to 100 cycles of rapid temperature change. A cycle of rapid temperature change consists of varying the temperature from -20ºC to 60ºC, and back again. Power is not applied during the test. After temperature cycling, the unit is placed in normal room ambient for at least 4 hours before power on.

Note 2: According to EN61000-4-2 , ESD class B: Some performance degradation allowed. No data lost. Self-recoverable. No hardware failures.

Note 3: No function occurs Mura shall be ignored after high temperature reliability test.

© AUO Display Plus Corporation Proprietary

For ACMEPOINT internal use only - provided by kevintsai on 2023/11/14

9.0 Shipping Label & Packaging

9.1 Shipping Label

The label is on the panel as shown below:

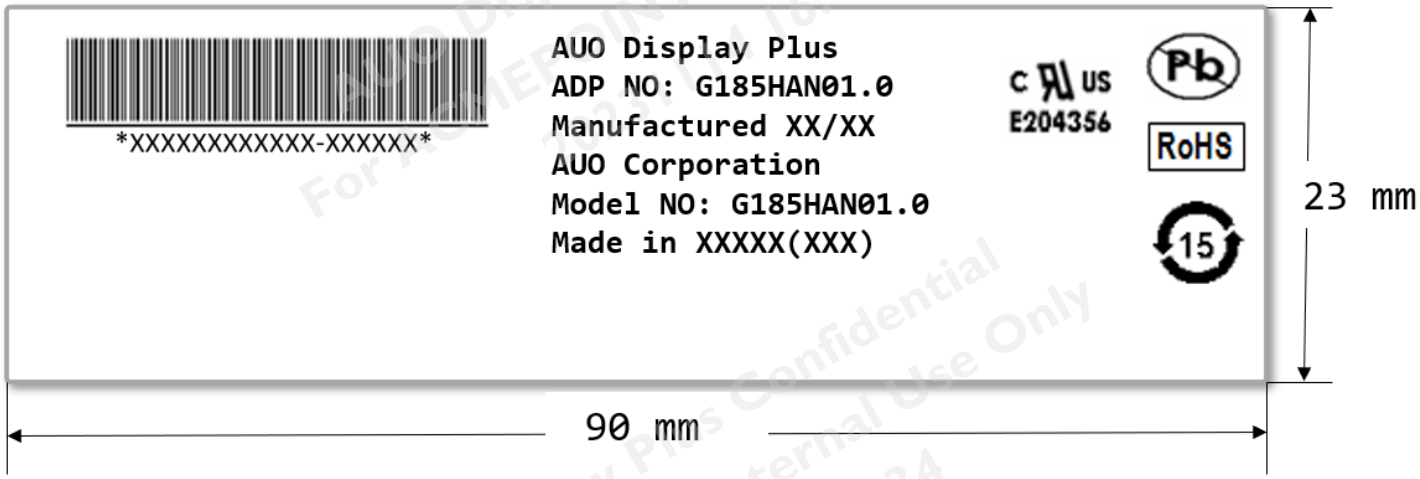

Note 1: For Pb Free products, AUO will add Pb for identification.

Note 2: For RoHS compatible products, AUO will add RoHS for identification.

Note 3: For China RoHS compatible products, AUO will add 15 for identification.

Note 4: The Green Mark will be presented only when the green documents have been ready by AUO Internal Green Team.

© AUO Display Plus Corporation Proprietary

For ACMEPOINT internal use only - provided by kevintsai on 2023/11/14

9.2 Packaging

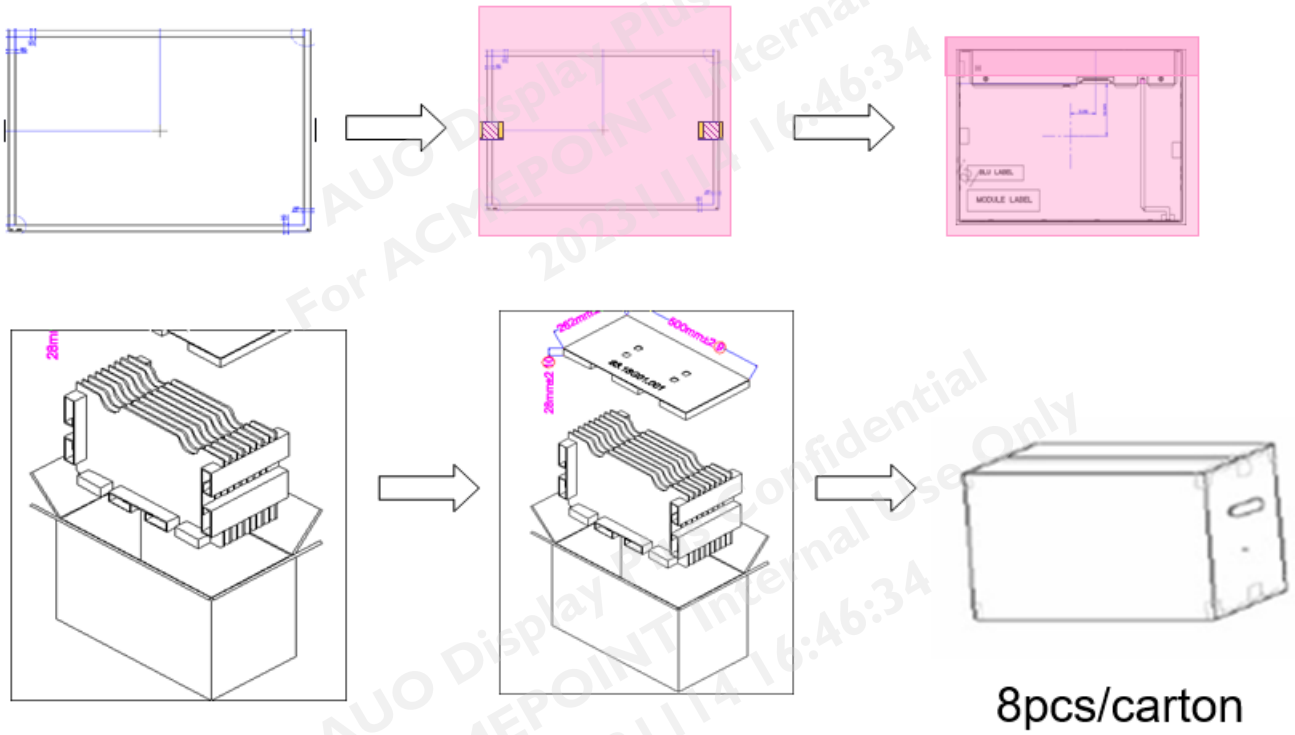

Max capacity：8 TFT-LCD module per carton

Max weight: 17 kg per carton

Outside dimension of carton: 520mm(L)* 280mm(W)*352mm(H)

Pallet size: 1150 mm *1100 mm * 132mm

Box stacked

By air_max：(2 *4) *4 layers，one pallet put 32 boxes，total 256pcs module

By sea_max：(2 *4) *4 layers + (2 *4) *1 layers , two pallet put 40 boxes，total320pcs module

By sea_HQ_max：(2 *4) *4 layers+(2 *4) *2 layers, two pallet put 48 boxes, total 384pcs module

© AUO Display Plus Corporation Proprietary

For ACMEPOINT internal use only - provided by kevintsai on 2023/11/14

9.3 Palletizing

	MAX_SHIPPING BY AIR	MAX_SHIPPING BY SEA	MAX_SHIPPING BY SEA_HQ
MODULE/CARTON	8	8	8
CARTON/LAYER	8	8	8
LAYER/PALLET	4	4+1	4+2
MODULE/PALLET	256	320	384
CARTON SIZE(MM)	520(L)*280(W)*352(H)	520(L)*280(W)*352(H)	520(L)*280(W)*352(H)
PALLET SIZE(MM)	1150(L)*1070(W)*132(H)	1150(L)*1070(W)*132(H)	1150(L)*1070(W)*132(H)
TOTAL PALLET HEIGHT(MM)	1540	2024	2376
TOTAL PALLET WEIGHT(KG)	493	626	746

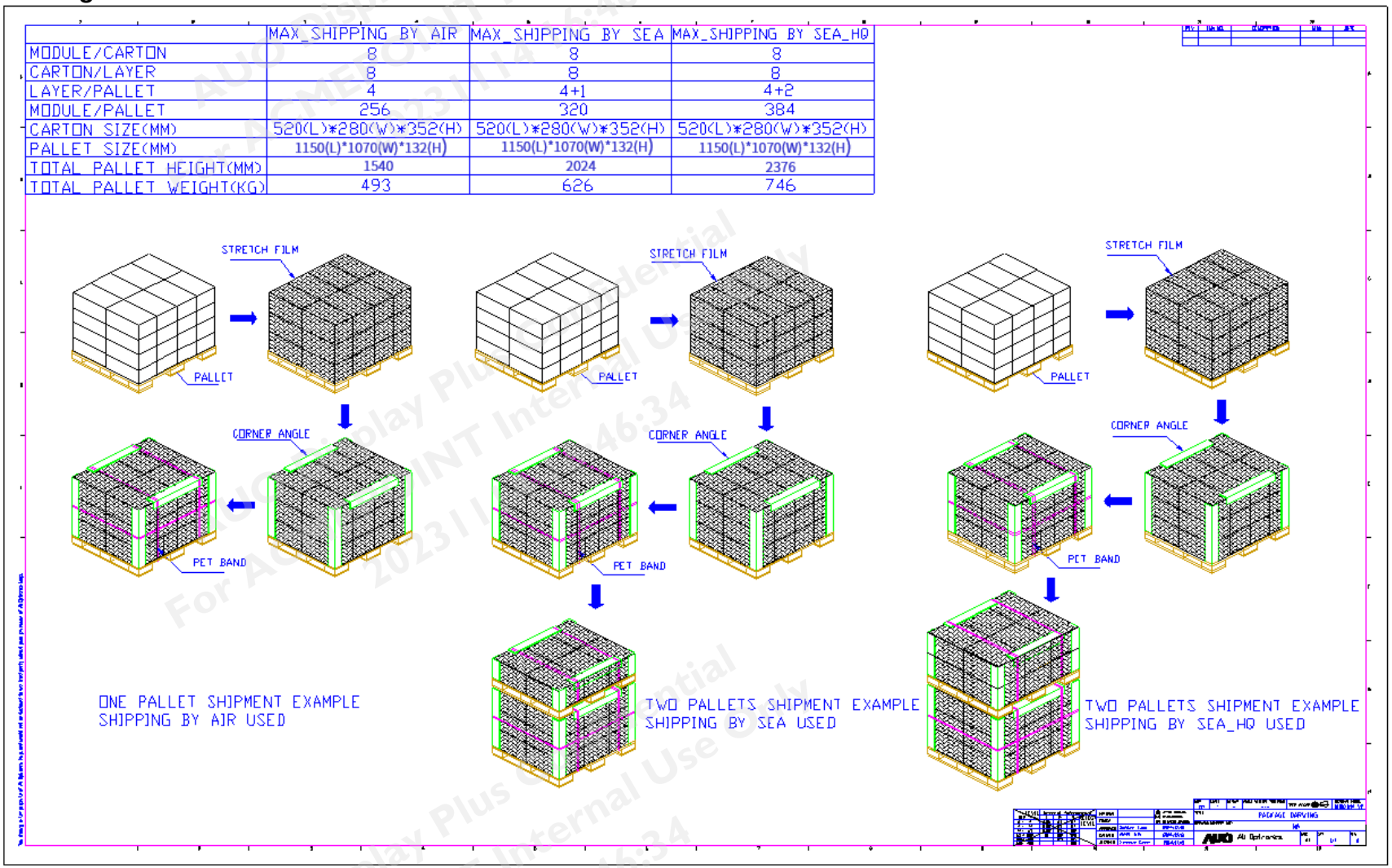

© AUO Display Plus Corporation Proprietary

For ACMEPOINT internal use only - provided by kevintsai on 2023/11/14

10.0 Mechanical Characteristics

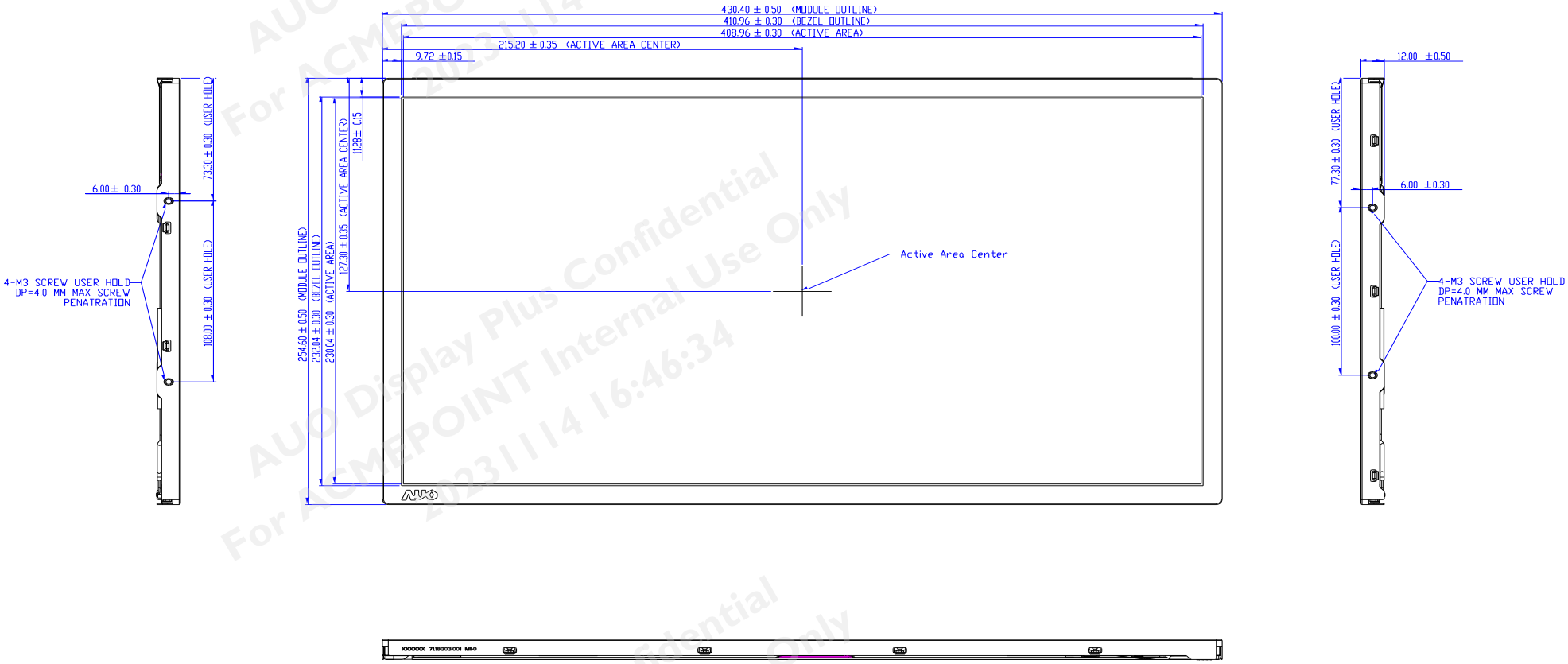

NOTES:
1. PRELIMINARY DRAWING FOR REFERANCE ONLY.
2. THE DIMENSION EXCLUDES DEFORATION.
3. TOLERANCE WITHOUT SPECFIED TO ±0.5mm.
4. TORQUE OF M3 USER HOLE SHOULD BE WITHIN 4 KGF-CM AND RE-SCREW 10 TIMES.
5. MODULE THICKNESS SHOULD BE 12.5mm MAX.
6. USER HOLE SCREW PENTRATION 4.0mm MAX.

設計驗證
工程課
2025 -03- 28
發行
鈺緯科技開發股份有限公司

© AUO Display Plus Corporation Proprietary

For ACMEPOINT internal use only - provided by kevintsai on 2023/11/14

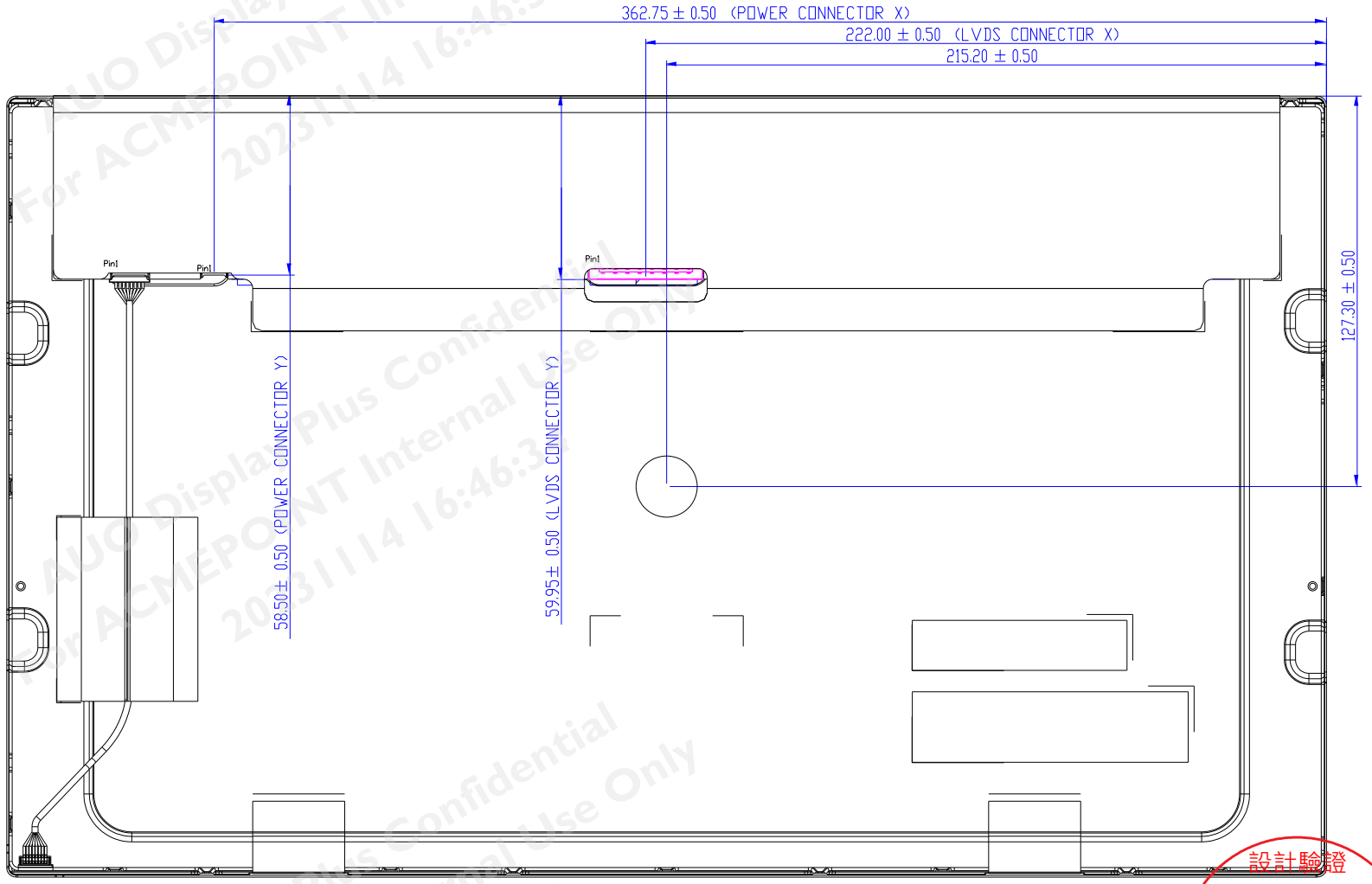

設計驗證
工程課
2025 -03- 28
發行
鈺緯科技開發股份有限公司

© AUO Display Plus Corporation Proprietary

AUO Display Plus Confidential
For ACMEPOINT Internal Use Only
2023/11/14 16:46:34

For ACMEPOINT internal use only - provided by kevintsai on 2023/11/14

11 Safety

11.1 Keen Edge Requirements

There will be no sharp edges or comers on the display assembly that could cause injury.

11.2 Materials

11.2.1 Toxicity

There will be no carcinogenic materials used anywhere in the display module. If toxic materials are used, they will be reviewed and approved by the responsible AUO toxicologist.

11.2.2 Flammability

The printed circuit board will be made from material rated 94-V1 or better. The actual UL flammability rating will be printed on the printed circuit board.

11.3 Capacitors

If any polarized capacitors are used in the display assembly, provisions will be made to keep them from being inserted backwards.

11.4 International Safety Standard Compliance

The TFT-LCD module will satisfy all requirements for compliance to:IEC/UL 62368-1

AUO Display Plus Confidential
For ACMEPOINT Internal Use Only
2023/11/14 16:46:34

© AUO Display Plus Corporation Proprietary

For ACMEPOINT internal use only - provided by kevintsai on 2023/11/14