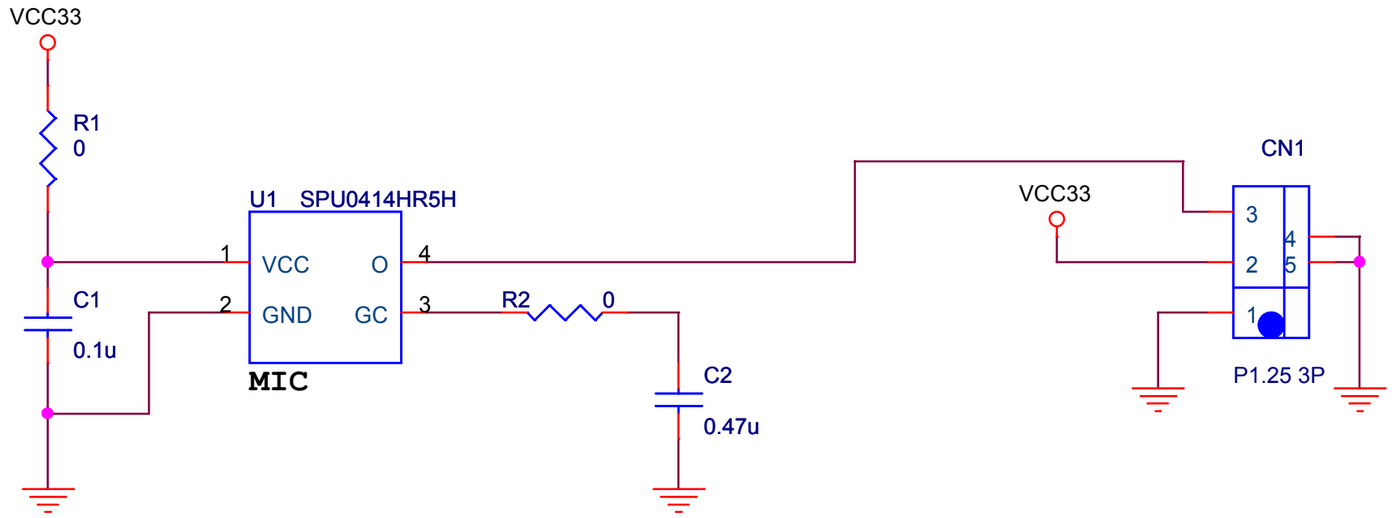

M1
FD-C1-C3
1

M2
FD-C1-C3
1

M3
FD-C1-C3
1

M4
FD-C1-C3
1

Title: MIC		
Size	Document Number 3PD539D0210	Rev
Date: Wednesday, August 28, 2019	Sheet 1 of 1	