life.augmented

D A T E : 2025/3/27

承　認　圖

APPROVAL SHEET

客　戶　名　稱	鈺緯科技開發股份有限公司
品　　名	**3BSTF10N01X**(B0108) **STF10N80K5**
廠　　商	Yosun Industrial Corp. 友尚股份有限公司 **台北市南港區經貿二路189號16樓** 02-2191-0099
業 務 工 程 師	洪慈伶0935-317-623

承　認　日　期	廠　商　簽　章	客　戶　承　認　章
	友尚股份有限公司 TEL:21910099 承認專用章 台北市南港區經貿二路189號16樓	設計驗證 工程課 2025 -03- 27 發行 鈺緯科技開發股份有限公司

STF10N80K5, STFU10N80K5

N-channel 800 V, 0.470 Ω typ., 9 A MDmesh™ K5 Power MOSFETs in a TO-220FP and TO-220FP ultra narrow leads

Datasheet - production data

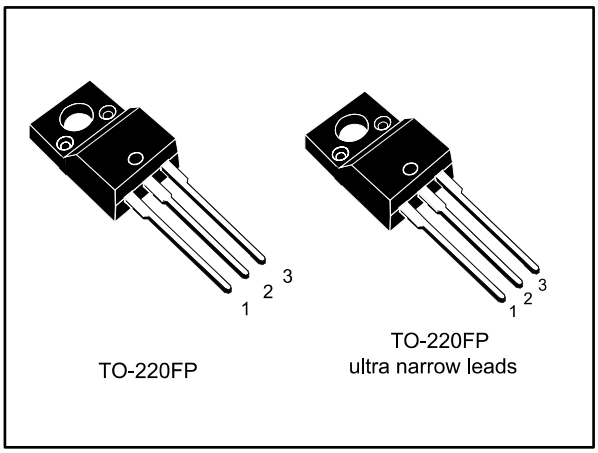

Figure 1: Internal schematic diagram

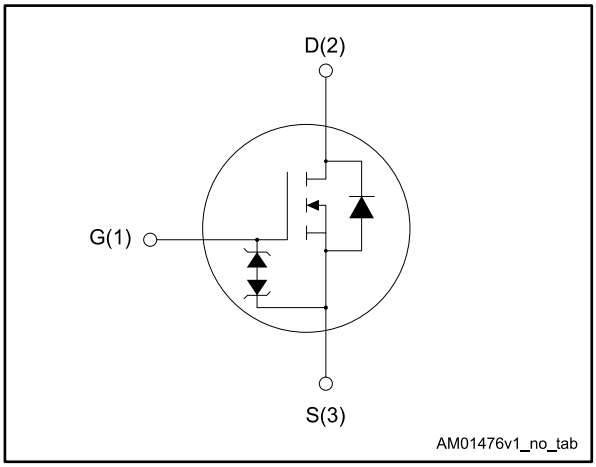

Features

Order code	V_{DS}	$R_{DS(on)}$ max.	I_D	P_{TOT}
STF10N80K5	800 V	0.600 Ω	9 A	30 W
STFU10N80K5				

- Industry's lowest $R_{DS(on)}$ x area
- Industry's best figure of merit (FoM)
- Ultra-low gate charge
- 100% avalanche tested
- Zener-protected

Applications

- Switching applications

Description

These very high voltage N-channel Power MOSFETs are designed using MDmesh™ K5 technology based on an innovative proprietary vertical structure. The result is a dramatic reduction in on-resistance and ultra-low gate charge for applications requiring superior power density and high efficiency.

Table 1: Device summary

Order code	Marking	Package	Packing
STF10N80K5	10N80K5	TO-220FP	Tube
STFU10N80K5		TO-220FP ultra narrow leads	

設計驗證
工程課
2025 -03- 27
發行
鈺鑾科技開發股份有限公司

This is information on a product in full production.

Contents

1 Electrical ratings 3
2 Electrical characteristics 4
2.1 Electrical characteristics (curves) 6
3 Test circuits 9
4 Package information 11
4.1 TO-220FP package information 12
4.2 TO-220FP ultra narrow leads package information 14
5 Revision history 16

1 Electrical ratings

Table 2: Absolute maximum ratings

Symbol	Parameter	Value	Unit
V_{GS}	Gate-source voltage	± 30	V
I_D (1)	Drain current (continuous) at T_C = 25 °C	9	A
I_D (1)	Drain current (continuous) at T_C = 100 °C	6	A
I_{DM} (2)	Drain current pulsed	36	A
P_{TOT}	Total dissipation at T_C = 25 °C	30	W
I_{AR}	Max. current during repetitive or single pulse avalanche (pulse width limited by $T_{jmax.}$)	3	A
E_{AS}	Single pulse avalanche energy (starting T_J = 25 °C, I_D = I_{AS}, V_{DD} = 50 V)	130	mJ
V_{ISO}	Insulation withstand voltage (RMS) from all three leads to external heat sink (t = 1 s; T_C = 25 °C)	2500	V
dv/dt (3)	Peak diode recovery voltage slope	4.5	V/ns
dv/dt (4)	MOSFET dv/dt ruggedness	50	
T_j	Operating junction temperature range	- 55 to 150	°C
T_{stg}	Storage temperature range		

Notes:

(1)Limited by maximum junction temperature.

(2)Pulse width limited by safe operating area.

(3)I_{SD}≤ 9 A, di/dt ≤ 100 A/µs; V_{DS} peak ≤ $V_{(BR)DSS}$

(4)V_{DS} ≤ 640 V

Table 3: Thermal data

Symbol	Parameter	Value	Unit
$R_{thj\text{-}case}$	Thermal resistance junction-case	4.2	°C/W
$R_{thj\text{-}amb}$	Thermal resistance junction-ambient	62.5	°C/W

2 Electrical characteristics

T_C = 25 °C unless otherwise specified

Table 4: On/off-state

Symbol	Parameter	Test conditions	Min.	Typ.	Max.	Unit
$V_{(BR)DSS}$	Drain-source breakdown voltage	V_{GS} = 0 V, I_D = 1 mA	800			V
I_{DSS}	Zero gate voltage drain current	V_{GS} = 0 V, V_{DS} = 800 V			1	µA
		V_{GS} = 0 V, V_{DS} = 800 V T_C = 125 °C (1)			50	µA
I_{GSS}	Gate body leakage current	V_{DS} = 0 V, V_{GS} = ±20 V			±10	µA
$V_{GS(th)}$	Gate threshold voltage	V_{DS} = V_{GS}, I_D = 100 µA	3	4	5	V
$R_{DS(on)}$	Static drain-source on-resistance	V_{GS} = 10 V, I_D = 4.5 A		0.470	0.600	Ω

Notes:

(1)Defined by design, no subject to production test.

Table 5: Dynamic

Symbol	Parameter	Test conditions	Min.	Typ.	Max.	Unit
C_{iss}	Input capacitance	V_{DS} = 100 V, f = 1 MHz, V_{GS} = 0 V	-	635	-	pF
C_{oss}	Output capacitance		-	53	-	pF
C_{rss}	Reverse transfer capacitance		-	0.8	-	pF
$C_{o(tr)}$(1)	Equivalent capacitance time related	V_{DS} = 0 to 640 V, V_{GS} = 0 V	-	85	-	pF
$C_{o(er)}$(2)	Equivalent capacitance energy related			34	-	pF
R_g	Intrinsic gate resistance	f = 1 MHz , I_D = 0 A	-	6	-	Ω
Q_g	Total gate charge	V_{DD} = 640 V, I_D = 9 A V_{GS} = 10 V See *Figure 16: "Test circuit for gate charge behavior"*	-	22	-	nC
Q_{gs}	Gate-source charge		-	5.5	-	nC
Q_{gd}	Gate-drain charge		-	13.2	-	nC

Notes:

(1)Time related is defined as a constant equivalent capacitance giving the same charging time as Coss when V_{DS} increases from 0 to 80% V_{DSS}.

(2)Energy related is defined as a constant equivalent capacitance giving the same stored energy as Coss when V_{DS} increases from 0 to 80% V_{DSS}.

Table 6: Switching times

Symbol	Parameter	Test conditions	Min.	Typ.	Max.	Unit
$t_{d(on)}$	Turn-on delay time	V_{DD} = 400 V, I_D = 4.5 A, R_G = 4.7 Ω V_{GS} = 10 V See *Figure 15: "Test circuit for resistive load switching times"* and *Figure 20: "Switching time waveform"*	-	14.5	-	ns
t_r	Rise time		-	11	-	ns
$t_{d(off)}$	Turn-off delay time		-	35	-	ns
t_f	Fall time		-	14	-	ns

Table 7: Source-drain diode

Symbol	Parameter	Test conditions	Min.	Typ.	Max.	Unit
I_{SD}	Source-drain current		-		9	A
I_{SDM}(1)	Source-drain current (pulsed)		-		36	A
V_{SD}(2)	Forward on voltage	I_{SD} = 9 A, V_{GS} = 0 V	-		1.5	V
t_{rr}	Reverse recovery time	I_{SD} = 9 A, di/dt = 100 A/µs, V_{DD} = 60 V, see *Figure 17: "Test circuit for inductive load switching and diode recovery times"*)	-	370		ns
Q_{rr}	Reverse recovery charge		-	4.58		µC
I_{RRM}	Reverse recovery current		-	25		A
t_{rr}	Reverse recovery time	I_{SD} = 9 A, di/dt = 100 A/µs, V_{DD} = 60 V, T_j = 150 °C see *Figure 17: "Test circuit for inductive load switching and diode recovery times"*	-	520		ns
Q_{rr}	Reverse recovery charge		-	5.88		µC
I_{RRM}	Reverse recovery current		-	22.5		A

Notes:

(1)Pulse width limited by safe operating area.

(2)Pulsed: pulse duration = 300 µs, duty cycle 1.5%.

Table 8: Gate-source Zener diode

Symbol	Parameter	Test conditions	Min	Typ.	Max	Unit
$V_{(BR)GSO}$	Gate-source breakdown voltage	I_{GS} = ± 1 mA, I_D = 0 A	30	-	-	V

The built-in back-to-back Zener diodes are specifically designed to enhance the ESD performance of the device. The Zener voltage facilitates efficient and cost-effective device integrity protection,thus eliminating the need for additional external componentry.

2.1 Electrical characteristics (curves)

Figure 2: Safe operating area

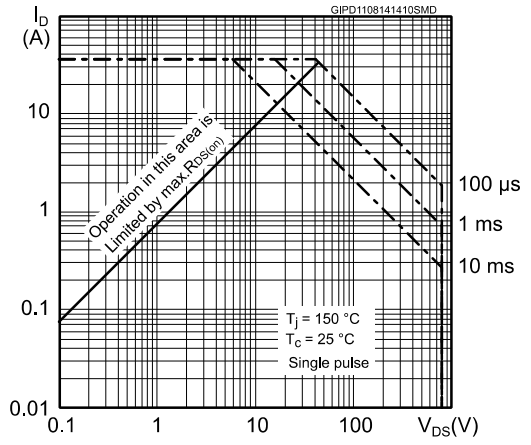

Figure 3: Thermal impedance

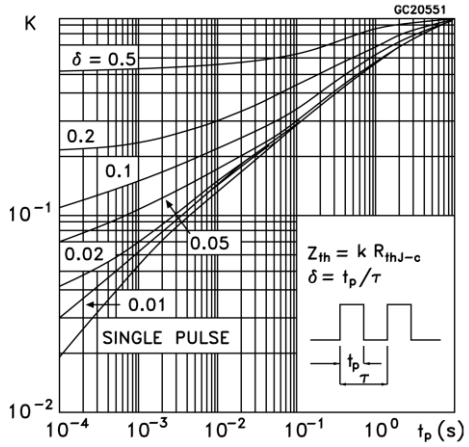

Figure 4: Output characteristics

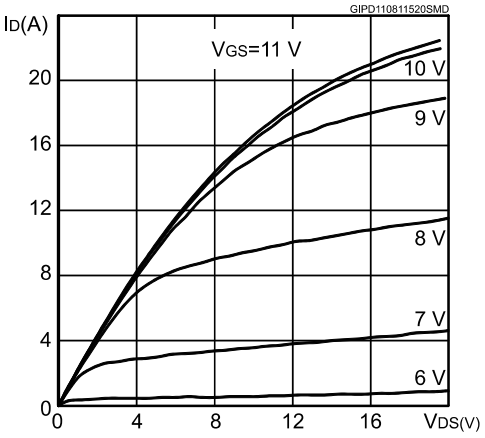

Figure 5: Transfer characteristics

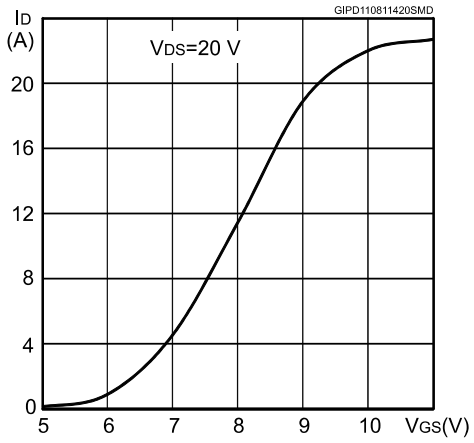

Figure 6: Gate charge vs. gate-source voltage

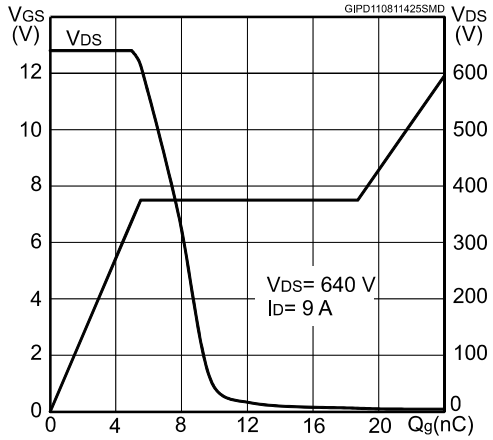

Figure 7: Static drain-source on-resistance

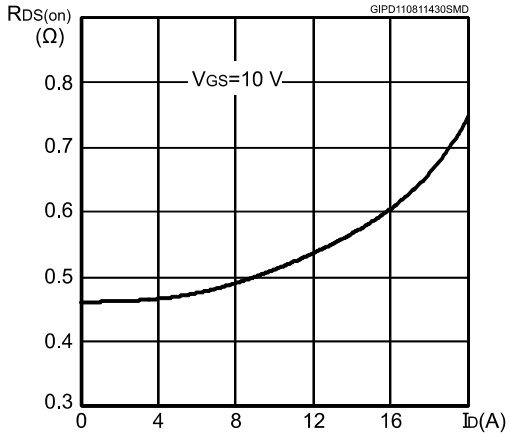

Figure 8: Capacitance variations

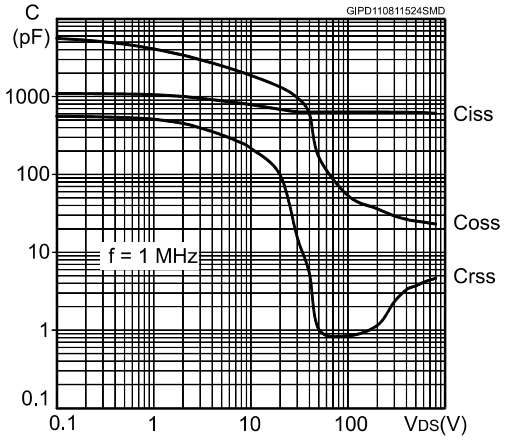

Figure 9: Source-drain diode forward characteristics

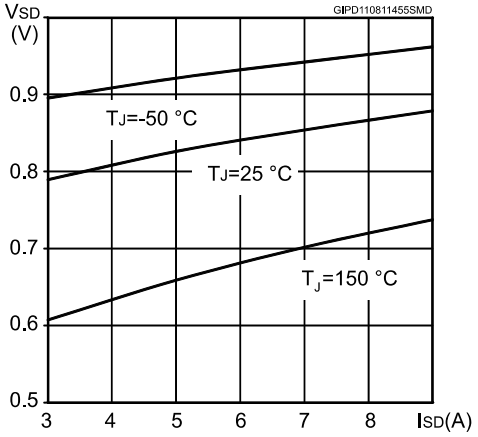

Figure 10: Normalized gate threshold voltage vs. temperature

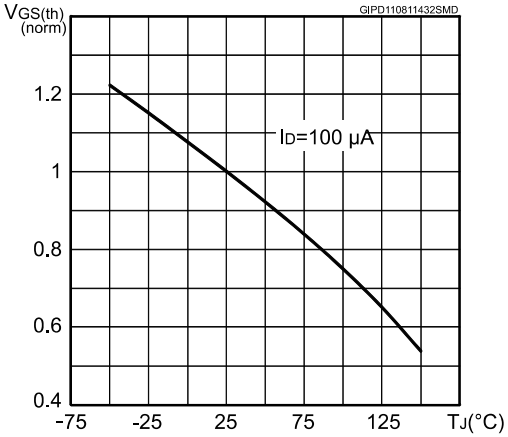

Figure 11: Normalized on-resistance vs. temperature

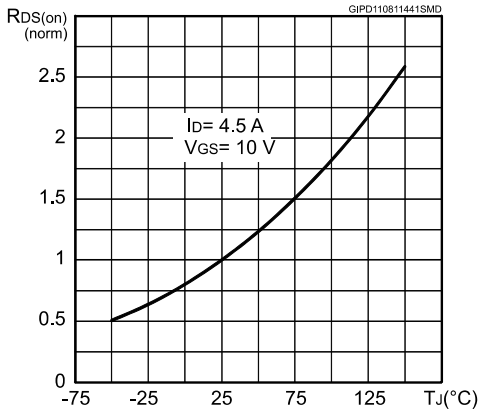

Figure 12: Normalized $V_{(BR)DSS}$ vs. temperature

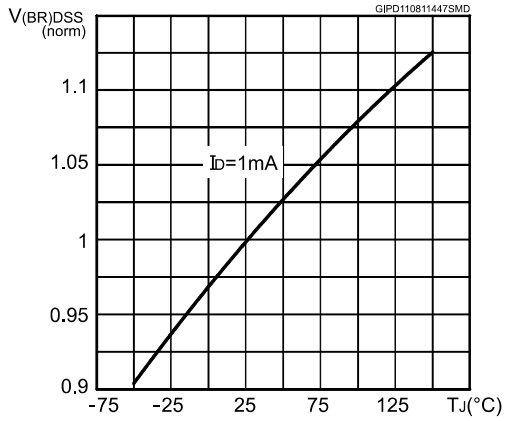

Figure 13: Maximum avalanche energy vs. starting T_J

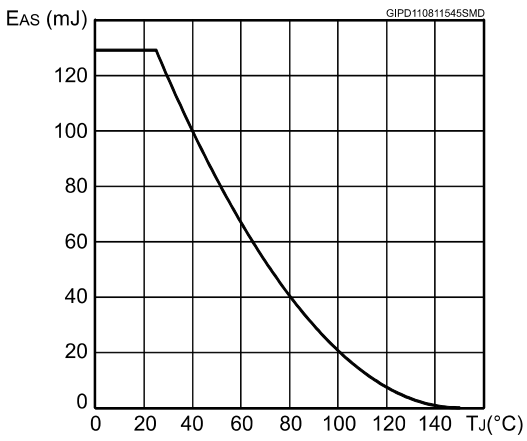

Figure 14: Output capacitance stored energy

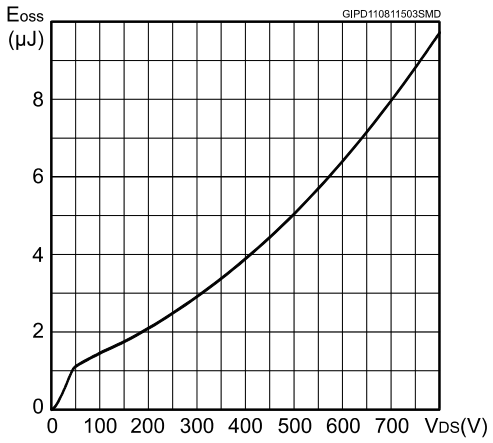

3 Test circuits

Figure 15: Test circuit for resistive load switching times

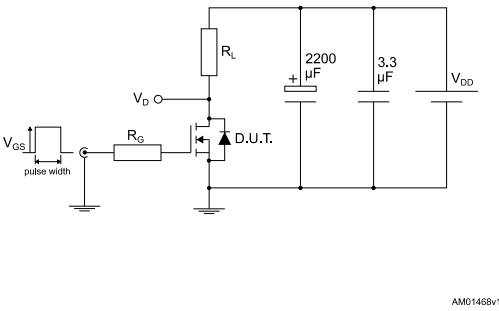

Figure 16: Test circuit for gate charge behavior

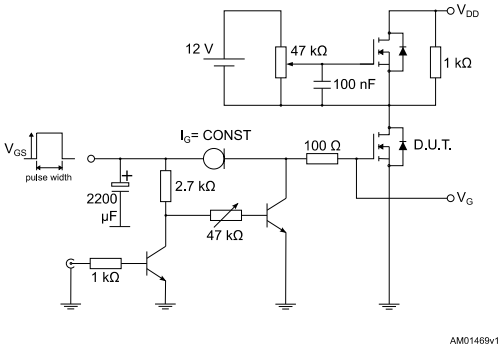

Figure 17: Test circuit for inductive load switching and diode recovery times

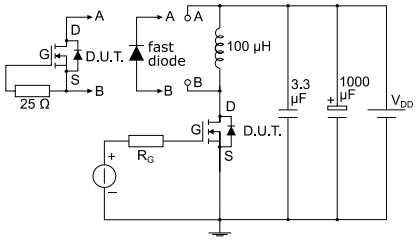

Figure 18: Unclamped inductive load test circuit

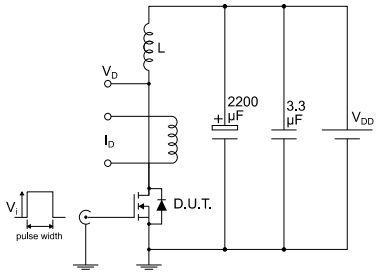

Figure 19: Unclamped inductive waveform

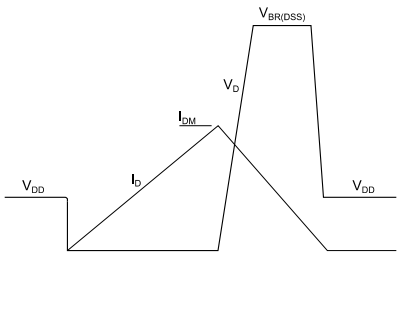

Figure 20: Switching time waveform

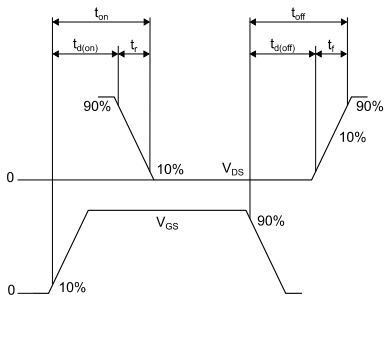

4 Package information

In order to meet environmental requirements, ST offers these devices in different grades of ECOPACK® packages, depending on their level of environmental compliance. ECOPACK® specifications, grade definitions and product status are available at: ***www.st.com***. ECOPACK® is an ST trademark.

4.1 TO-220FP package information

Figure 21: TO-220FP package outline

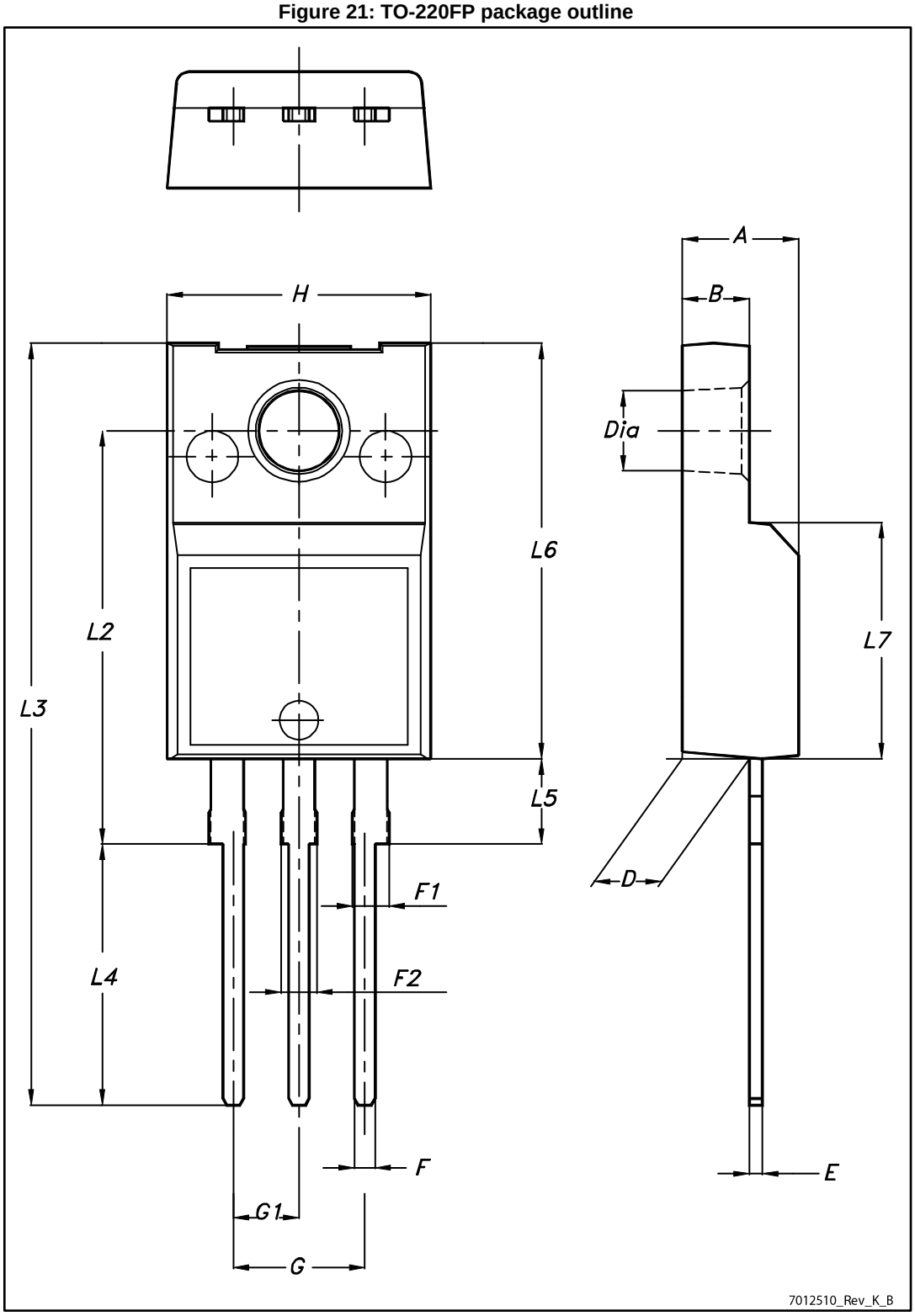

Table 9: TO-220FP package mechanical data

Dim.	mm		
	Min.	Typ.	Max.
A	4.4		4.6
B	2.5		2.7
D	2.5		2.75
E	0.45		0.7
F	0.75		1
F1	1.15		1.70
F2	1.15		1.70
G	4.95		5.2
G1	2.4		2.7
H	10		10.4
L2		16	
L3	28.6		30.6
L4	9.8		10.6
L5	2.9		3.6
L6	15.9		16.4
L7	9		9.3
Dia	3		3.2

4.2 TO-220FP ultra narrow leads package information

Figure 22: TO-220FP ultra narrow leads package outline

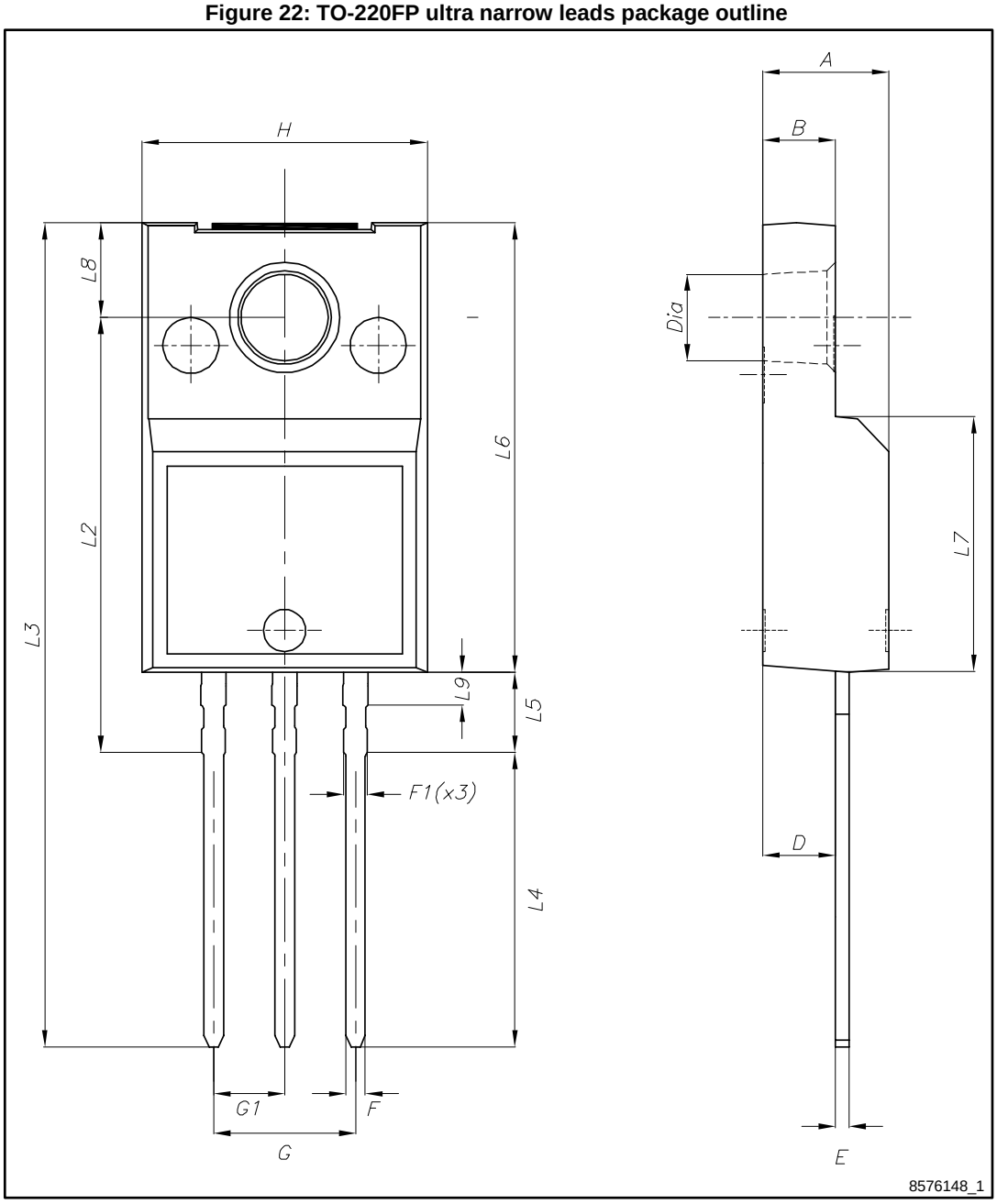

Table 10: TO-220FP ultra narrow leads mechanical data

Dim.	mm		
	Min.	Typ.	Max.
A	4.40		4.60
B	2.50		2.70
D	2.50		2.75
E	0.45		0.60
F	0.65		0.75
F1	-		0.90
G	4.95		5.20
G1	2.40	2.54	2.70
H	10.00		10.40
L2	15.10		15.90
L3	28.50		30.50
L4	10.20		11.00
L5	2.50		3.10
L6	15.60		16.40
L7	9.00		9.30
L8	3.20		3.60
L9	-		1.30
Dia.	3.00		3.20

5 Revision history

Table 11: Document revision history

Date	Revision	Changes
23-Jun-2014	1	First release.
13-Aug-2014	2	-Document status promoted from preliminary to production data. -Inserted *Section 3: Electrical characteristics (curves)*. -Minor text changes.
17-Sep-2014	3	Updated title, features and description in cover page.
05-Nov-2014	4	Updated *Section 3: Electrical characteristics (curves)*. Minor text changes.
08-Sep-2016	5	Added the order code STFU10N80K5 and the relative *Section 4.2: "TO-220FP ultra narrow leads package information".*

IMPORTANT NOTICE – PLEASE READ CAREFULLY

STMicroelectronics NV and its subsidiaries (“ST”) reserve the right to make changes, corrections, enhancements, modifications, and improvements to ST products and/or to this document at any time without notice. Purchasers should obtain the latest relevant information on ST products before placing orders. ST products are sold pursuant to ST’s terms and conditions of sale in place at the time of order acknowledgement.

Purchasers are solely responsible for the choice, selection, and use of ST products and ST assumes no liability for application assistance or the design of Purchasers’ products.

No license, express or implied, to any intellectual property right is granted by ST herein.

Resale of ST products with provisions different from the information set forth herein shall void any warranty granted by ST for such product.

ST and the ST logo are trademarks of ST. All other product or service names are the property of their respective owners.

Information in this document supersedes and replaces information previously supplied in any prior versions of this document.

© 2016 STMicroelectronics – All rights reserved

Mouser Electronics

Authorized Distributor

Click to View Pricing, Inventory, Delivery & Lifecycle Information:

STMicroelectronics:

STF10N80K5 STFU10N80K5