REV	DC/EC NUMBER	DESCRIPTION	DATE
V1		initial version	2020.06.11
V2	△	Modify the ink printing of glass	2020.12.01
V2.1	2.1	Add surface protective film	2021.04.06
V2.2	2.2	Modify the ink printing of glass	2021.06.07
V2.3	2.3	Modify the ink printing of glass Modify the OCA typ Add a protective film on the back of FPC	2021.12.02
V2.4	2.4	Modify the position of the ink logo. Add ball mark 33.	2021.12.16
V3	3	Change IC model EETI EXC81W84	2022.08.19
V3.1	3.1	Add Coding area for glass material number on back view.	2023.04.19

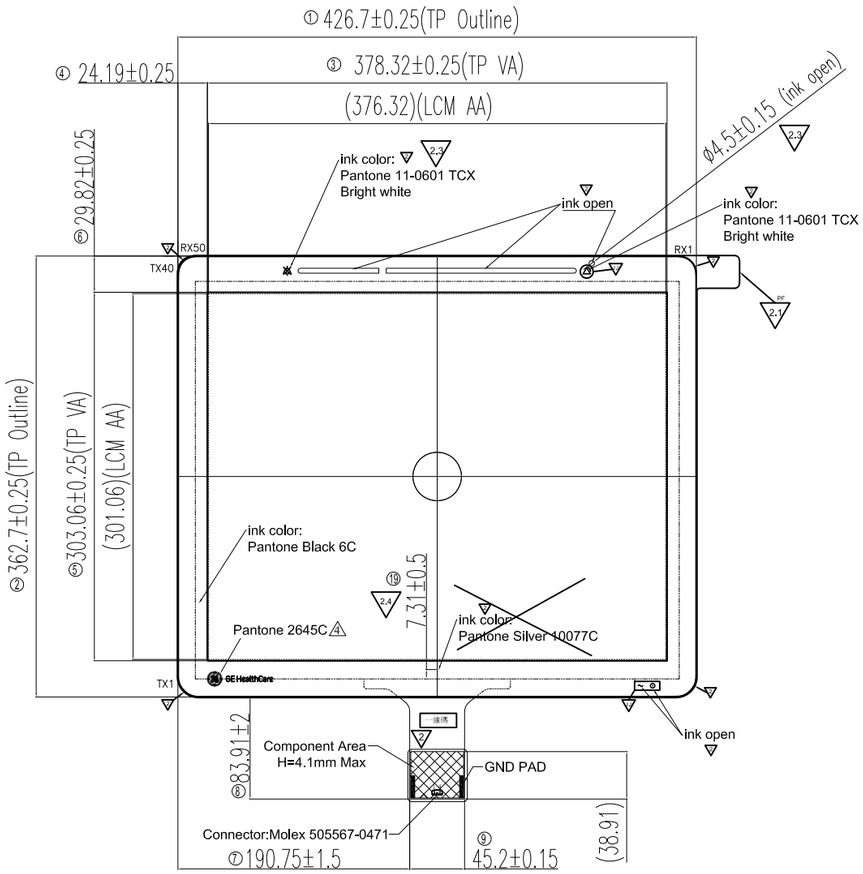

TOP view

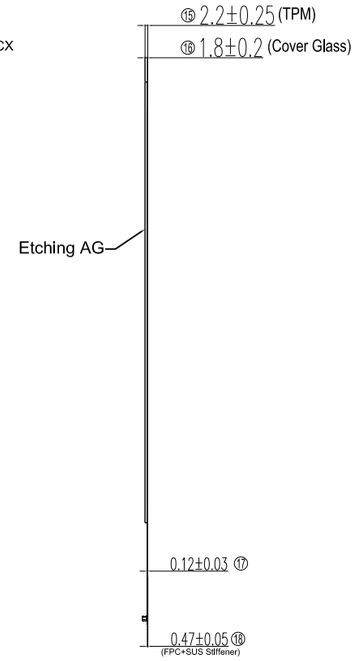

Side view

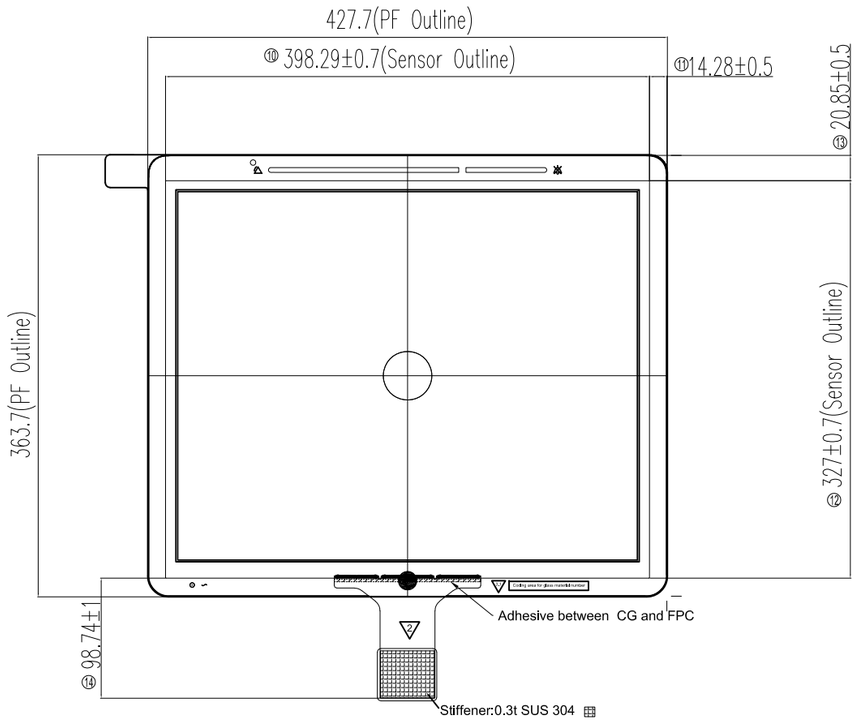

Back view

Pin NO.	Define
1	5V0_SYS
2	USB_TS_D-
3	USB_TS_D+
4	GND

Note :
1.CG material: Sodalime glass, t=1.8mm
Chemical Strengthened: CS>450MPa,DOL>8um
Etching AG, Gloss 80±10, Haze: 3~8%
2.Sensor Film Assembly: t=0.4mm
3.Check Code: ① ~ ⑲
4.Flextail do not bend to less than 5mm radius

LEVEL / DIMENSION	GENERAL LINEAR TOLERANCE 1	2	3	SELECT LEVEL
0 ~ 4	0.05	0.2	0.2	
4 ~ 14	0.1	0.2	0.2	
14 ~ 63	0.1	0.2	0.4	
63 ~ 250	0.2	0.4	0.6	2
250 ~ 600		0.6	1.0	
600 ~ 4000			1.6	

GENERAL ANGULAR TOLERANCE				
LEVEL	1	2	3	SELECT LEVEL
RANGE	1°	2°	3°	2

▭ CRITICAL DIMENSION	Ⓝ SPEC DIMENSION	UNIT: mm	SCALE: 1:1	3rd ANGLE	MODEL NAME: MC190GFL01
APPROVED	LD Chia	2023/04/19	PART NUMBER/A-DRAWING NUMBER: 9BM19000-031		PART NUMBER VER.: 01
CHECKED	GS Chen	2023/04/19	PART DESCRIPTION: MC190GFL01, TPM		DRAWING REV.: V3.1
DESIGNED	Allen Huang	2023/04/19		SIZE: A0	SHEET NUMBER: 1of1