REV.	DATE	DESCRIPTION	BY	APVD

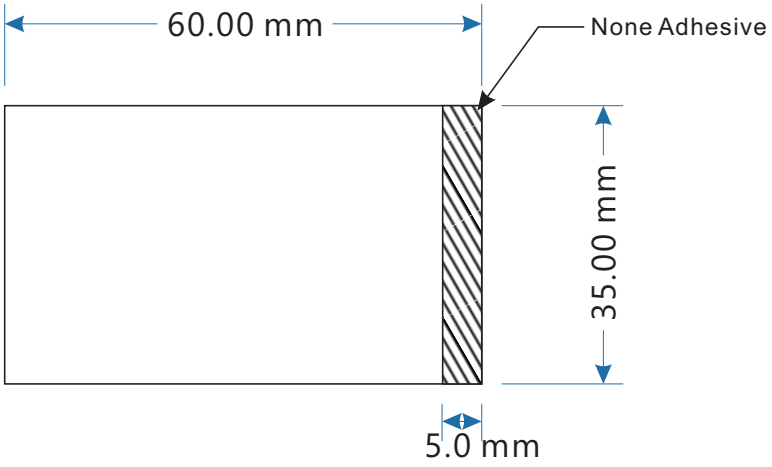

Notes:

1.Not available in Diva factory, expected to be purchased from Qisda

2.Use Qisda part number 4E.00100.001 blank label

3.MATERIAL: Pearlescent synthetic paper,White

設計驗證
工程課
2025 -04- 30
發行
鈺緯科技開發股份有限公司

4E.00100.001

PM / SALES	THIRD ANGLE PROJECTION	UNITS: mm	SCALE: 1/1	SHEET: 1/1	MODEL NO.:3MDL4XLB920
		MATERIAL: SEE NOTES		TREATMENT: SEE NOTES	
ENG.DEPT	SAFETY	DSGD by COCO	2025/4/25	PART NAME: LABEL(LABELART60*35MMWHITESN)	
		APVD by Laglie	2025/04/25	PART NO.: 3MDL4XLB920	VER.0
		APVD NO.: (M3512)	FILE NAME: 3MDL4XLB920.cdr	DIVA Laboratories, Ltd.	

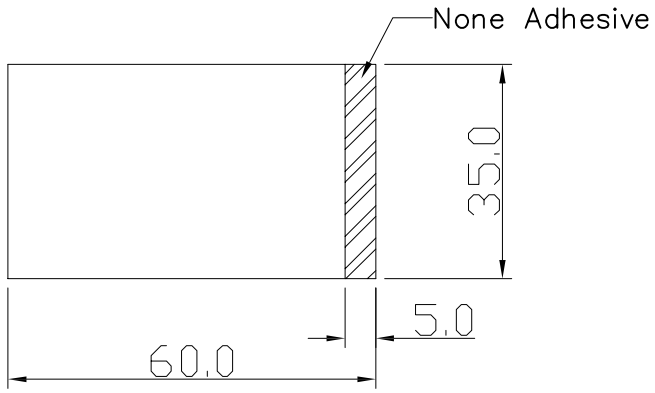

NOTES:
1.MATERIAL: 珠光合成纸, 80LB, WHITE
2.FINISH: PRINT FRONT SIDE, ADHESIVE BACK
ADHESIVE: SPEC REFER TO ES-TMRD-0B-015
3.THIS PART SHOULD NOT CONTAIN ANY SUBSTANCES WHICH ARE SPECIFIED IN SS-00259-1.

-Level-1 environment-related substances specified in SS-00259 should never be contained.

-Molding resin, ink, paint and wire rods should be procured only from the supplier approved as a Sony Green Partner.

REV	DESCRIPTION	SIGN	DATE
B	2'nd ISSUE	Beauty Chen	7/Feb'06
A	FIRST ISSUE	ROGERS HUANG	1/18'05

UNITS OR ASSEMBLY	ALL	NAME	LABEL ART 60*35MM SERIAL
DRN	ROGERS 1-18-05	MATERIAL	ART
DSN		FINISH	
CKD			
APPD	ROGERS	Qisda Corporation	

SCALE	X	DIM IN	M.M
LIMITS UNLESS OTHERWISE NOTED			
1-6	±0.1	300-1000	±0.8
6-30	±0.2	1000-2000	±1.2
30-100	±0.3	2000-	±2.0
100-300	±0.5	ANG	±1/2°

MOLD NO. #

SHEET 1 OF 1

DRAWING NO. 4E.00100.001

Qisda Corporation / ARTICLE INSPECTION REPORT

DATE: 3/3/10

PAGE: 1 OF 1

VENDOR	明 頡	**CAVITY NO**	
PART NO	4E.00100.001	**MEASURED BY**	陳 淑 雯
DW NO	60*35mm	**CHECK BY**	陳 淑 雯
PART NAME		**MEASURE INSTRUMENT**	游標卡尺

單位 mm

NO	PRINT DIMENSION			ACTUAL DIMENSION(S)			A/R			DELTA			ZONE	COMMENTS
1	60.00	0.15	0.15	60.050			A			0.05				
2	60.00	0.15	0.15	60.100			A			0.10				
3	60.00	0.15	0.15	60.150			A			0.15				
4	60.00	0.15	0.15	60.050			A			0.05				
5	60.00	0.15	0.15	60.000			A			0.00				
6	60.00	0.15	0.15	60.100			A			0.10				
7	60.00	0.15	0.15	60.050			A			0.05				
8	60.00	0.15	0.15	60.000			A			0.00				
9	60.00	0.15	0.15	60.150			A			0.15				
11	60.00	0.15	0.15	59.900			A			0.10				
12	35.00	0.15	0.15	35.100			A			0.10				
13	35.00	0.15	0.15	35.050			A			0.05				
14	35.00	0.15	0.15	35.150			A			0.15				
15	35.00	0.15	0.15	35.100			A			0.10				
16	35.00	0.15	0.15	34.900			A			0.10				
17	35.00	0.15	0.15	34.950			A			0.05				
18	35.00	0.15	0.15	35.000			A			0.00				
19	35.00	0.15	0.15	35.150			A			0.15				
20	35.00	0.15	0.15	35.050			A			0.05				
21	35.00	0.15	0.15	35.100			A			0.10				
22														
23														
24														
25														
26														
27														
28														
29														
30														

COMMENTS					
DSN	**WW1/Liyu Chen**	**CHK**	**WW1/WT Liu**	**APPD**	**WW1/L.J. Pan**

*Tolerance is +/- unless otherwise indicated. A:ACCEPTED R:REJECTD

送交处: 日期:YYYY/MM/DD 2015/6/12

Certificate of Non-use of Environmentally Controlled Substances
(For Parts Approval)

供应商编号/Supplier Code: G090905
供应商名称/Company Name: 明頡(股)公司
负责人姓名/Person in Charge: 陳家珍
e-mail: julia@mingjye888.com.tw

本公司销售的零部件及组装件上使用的材料和零部件中，未使用索尼技术标准（SS－00259）中禁止的1级管理对象（物质及其用途），特此证明。
We hereby certify that ANY material, where usage has been prohibited (Listed as Level 1) according to Sony's Technical Standard SS-00259, are not contained in any parts, semi-finished units (unit parts) or packaging materials sold to Sony.

-Recycled resin and coated wire must be procured only from the supplier approved as a Sony Green Partner.

并且，零部件及组装件上使用的材料和零部件等，由以下材料构成。特此报告。
Regarding materials used in the manufacture of the parts, unit parts or packaging materials, we notify that they are made up of the following ingredients:

（1）零部件/组装件/ Unit parts/parts

零部件名称/ Part Description:
零部件编号/ Part No. 4E.00100.001
SB编号/ SB No.:
生产工厂/ Production Plant 明頡(股)公司

＜使用材料＞

No.	使用部位/ Location where Raw Material is used on part	原材料供应商名称/ Raw Material Manufacturer Name	材料名称/型号/ Material/Type Name	指定原材料/ DRM	供应商编号ID No./ DRM Supplier ID No.	绿皮书编号GB No./ DRM Green Book No.	备注/ Remarks
1	LABEL	四維	CL02	NO	無	無	
2							
3							
4							
5							
6							
7							
8							
9							
10							

＊填写不下时，可以增加填写行。(*Please add more rows as needed.)

(2) 另外提交的JGPSSI数据中记载了SS-00259对象物质的含有状况。
(JGPSSI data which aiready have been submitted includes containing condition of SS-00259 controlled substances.)

(3) 磷酸三(2,3-二氯丙基)酯（TDCPP）没有超过界限值水准。(We've confirmed that TCPP/TDCPP is not contained above threshold level.)
TCPP: 磷酸三（2-氯丙基）酯（TCPP）/Tris(2-chloro-1-methylethyl) phosphate
TDCPP: 磷酸三(2,3-二氯丙基)酯（TDCPP）/Tris(1,3-dichloro-2-propyl) phosphate

(4) 全氟辛酸铵（PFOA）没有超过界限值水准。(We've confirmed that PFOAs are not contained above threshold level.)
PFOA類: 全氟辛酸铵（PFOA）、其盐和酯
PFOAs: Perfluorooctanoic acid (PFOA) and individual salts and esters of PFOA

规格信息/Specification information

(5) 六价铬化合物的表面处理/Cr6+ surface treatment
①有使用表面处理(电镀、化学转化处理等的表面处理等) □有(Yes) ■无(No)
(Is any surface treatment used (chemical treatment/ coating, chrome plating, etc.) ?)
②使用的的处理处理工程名 /(Process name if "YES")
填写表面处理工序名称(Process name for surface treatment)：_____。
使用黑色铬时，低温铬电镀、氟化低温镀铬请填写电镀处理厂家名称：_____。
(If black chrome plating, cold black chromium plating, and fluoride low temperature chrome plating were used, provide the name of th

(6) 请回答下面关于聚氯乙烯（PVC） (Polyvinyl chloride (PVC))
①有无使用聚氯乙烯（PVC）。(Is any PVC used?) □有(Yes) ■无(No)
②如果使用了的话，是否符合 SS-00259 最新版之要求? □满足规格(Yes) □不满足(No) □没有要求(There is no requirment)
(If any above substances are used, whether satisfies the requirement indicated on SS-00259 latest revision.)

(7) 有无使用溴素阻燃剂（BFR） (Brominated flame retardent (BFR))
①有无使用溴素阻燃剂（BFR） (Is any BFR used?) □有(Yes) ■无(No)
②如果使用了的话，是否符合 SS-00259 最新版之要求? □满足规格(Yes) □不满足(No) □没有要求(There is no requirmeent)
(If any above substances are used, whether satisfies the requirement indicated on SS-00259 latest revision.)

＊需要补充的事项，请填写在下栏内。
(Additional Remarks:)

(2014年4月1日改订)(1-Apr-14)

商　標　紙　規　格　表
SPECIFICATION

DATE : 08/28/1998

品名 Artical Name	和膠銅版商標紙	構造 Construction	→ 銅版紙 → 處理劑 → CP1 → REOC
代號 Code	CL02		

面層 Surface Material			底層 Liner		
材料名稱 Article name		銅版紙	材料名稱 Article name		淺黃牛皮紙
厚度 Thickness	mm	0.075 ± 10%	厚度 Thickness	mm	0.08 ±10%
基重 Basic Weight	g/㎡	80	基重 Basic Weight	g/㎡	87 ±5 %
抗張力(min.) Tensile Strength	kg/25mm	7.5	抗張力(min.) Tensile Strength	kg/25mm	8
伸長率 Elongation	%		伸長率 Elongation	%	
顏色 Color		白	顏色 Color		黃
平滑度 Smoothness		優	平滑度 Smoothness		良
印刷性 Printability		良			

產品物性 Physical Properties

膠系 Adhesive Base		橡膠系	剝離力 Release Force	g/25mm	2 - 8
膠厚 Coating Thickness	mm	0.023	耐候性 Weathering Resistance		
上膠量 Dry Coating Weight	g/㎡	23 ±3	適用溫度 Temperature Range	℃	10 ～ 40
初期力 Initial Tack	#7/ cm	15 ↓	耐溶劑 Solvent Resistance		
黏著力 180° Peel Adhesion	Kg/25mm	0.3 - 0.6			

背著物 / 黏膠	紙板紙箱	塗裝木料	甘蔗板	一般塑膠	塑膠瓶	塑膠筆管	PE	一般玻璃	特殊玻璃	塗裝金屬	棉布	特多龍	尼龍	橡膠	磁磚	壓克力板	EA泡棉
LS2	○	○	△	○	○	○	○	○	○	○	○	△	△	△	○	○	△
LS4	○	○	△	○	○	○	○	○	○	○	○	△	△	○	○	○	△
LS7	○	○	△	○	○	○	○	○	○	○	○	△	△	△	○	○	△
LSG	○	△	X	△	△	X	X	○	△	○	○	X	X	X	△	○	X
DSC	○	△	X	△	△	X	X	○	△	○	○	X	X	X	△	○	X
CP1	暫時貼著用，商標紙撕開後，不破壞被貼物之表面。																
CP6	暫時貼著用，商標紙撕開後，不破壞被貼物之表面。.																

特殊用途，另洽訂製

四維企業股份有限公司 全面品質管理推進室 TEL:(03)3612123

REMARK: 特性之測試條件: 23℃, 65%RH。

四維企業股份有限公司
FOUR PILLARS ENTERPRISE CO., LTD.

0903-000-003

AP_GP BOM Report

Qisda P/N	4E.00100.001
Qisda Item description	#LABEL ART 60*35MM WHITE SN
Maker	MING JYE
Maker P/N	4E.00100.001
Create date	2024/10/15

Component type	Description	Supplier	Subpart type	Subpart Description	Subpart Supplier	Sample Description	Remark	Report No.	Test Date	Cd	Pb	Hg	Cr6+	PBBs/PBDEs	Br	Cl	Br+Cl	DIBP	DEHP	BBP	DBP	F	I	Exemptions
Label	CL02	四維	Paper	CL02	四維	White Label		CE/2018/45890	2018/05/03	N.D	N.D	N.D	N.D	N.D	N.D	110	110	N.D	N.D	N.D	N.D			
Summary data										N.D	N.D	N.D	N.D	N.D	N.D	110	110	N.D	N.D	N.D	N.D			

GreenProductCheckList			
Applier	Neko.Hsieh	Requester	Neko.Hsieh
Part No	4E.00100.001	Description	#LABEL ART 60*35MM WHITE SN
Maker	MING JYE	Maker P/N	4E.00100.001
Remark			

GP pattern

France Mineral Oil ban law: Arrêté du 13 avril 2022 (Article 112 of Decree No. 2020-105)	REACH [SVHC30] 2024-01-23 (240 substances)
ELV Directive 2000/53/EC	Panasonic [Group Chemical Substances Management Rank Guidelines] Rev. 13
EPEAT Material Restriction-Beryllium (Be) <1000ppm	DELL [ENV0424] Rev. A09-00
Bosch [N2580] 2017-10-11	CE Integrative pattern
SONY [SS00259] 22th Edition	US EPA TSCA [Section 6(h)] 20210308 (5 PBTs)
BenQ [CMM0-GP-001] Rev.15 (SUP-QM-07-02 Rev.14)	DELL [ENV0424] Rev. A08-00
WACOM [WD3-H-19] 様式5 Survey Sheet, version 36	Annex XIV of REACH 2017-06-13
IEC 62474 Declarable Substances updated on 2023/07/22 D27	QISDA [CMM0-0B-013] Rev. 6
JVCKENWOOD [Green Procurement Guideline] Rev 2.7	Barco [Substances List] ver.2.1
Panasonic [Group Chemical Substances Management Rank Guidelines] Rev. 12	ELO [ENG SPEC, Green Procurement Guidelines ES600973] Rev.Z
WACOM [WD3-H-19] 様式5 Survey Sheet, version 35	REACH [SVHC29] 2023-06-14 (235 substances)
PHILIPS [PHGR-GS-BP01-012] Rev. 7	SONY [SS00259] 21v2th Edition
Halogen-Free general spec	REACH [SVHC31] 2024-06-27 (241 substances)
Annex XIV of REACH 2021-02-06	ALPINE [GREEN PROCUREMENT STANDARD] VER10
BenQ [CMM0-GP-001] Rev.14 (SUP-QM-07-02 Rev.13)	Panasonic [Group Chemical Substances Management Rank Guidelines] Rev. 14
JVCKENWOOD [Green Procurement Guideline] Rev 2.3	EU RoHS [2011/65/EU+(EU)2015/863]+Packing [94/62/EC]+Battery [(EU) 2023/1542]
POPs Regulation (EU) 2019/1021 ANNEX I / II (2021.02.02)	Annex XIV of REACH 2022-04-08
JIG-101 Ed4.0	ELO [ENG SPEC, Green Procurement Guidelines ES600973] Rev.W
CASIO [Green Procurement Standard Manual] 8th Edition	Panasonic [Group Chemical Substances Management Rank Guidelines] Rev. 11
BenQ [CMM0-GP-001] Rev.16 (SUP-QM-07-02 Rev.15)	REACH [SVHC28] 2023-01-17 (233 substances)
WACOM [WD3-H-19] 様式5 Survey Sheet, version 37	DELL [ENV0424] Rev. A11-00
DELL [ENV0424] Rev. A10-00	BenQ [CMM0-GP-001] Rev.13 (SUP-QM-07-02 Rev.12)
POPs Regulation (EU) 2019/1021 ANNEX I / II (2023.08.28)	

Control items:

Class A (Essential items)

No.	Control items	Subpart Group	Spec (ppm)	Test data (ppm)
1	Cadmium (Cd) / Cadmium Compounds 鎘及鎘化合物	Packing material	100	N.D
2	Lead (Pb) / Lead Compounds 鉛及鉛化合物	Packing material	1000	N.D
3	Mercury (Hg) / Mercury Compounds 汞及汞化合物	Packing material	1000	N.D
4	Hexavalent Chromium (Cr 6+) and its Compounds 六價鉻及其化合物	Packing material	1000	N.D
5	PBBs / PBDEs / PBBEs/PBDOs 聚溴聯苯及溴聯苯醚/多溴化聯苯醚類	Packing material	1000	N.D
133	Bromine (Br) 溴	Packing material	900	N.D
134	Chlorine (Cl) 氯	Packing material	900	110
135	Bromine (Br) + Chlorine (Cl) 溴+ 氯	Packing material	1500	110
178	Diisobutyl phthalate DIBP, 鄰苯二甲酸二異丁酯 CAS No.84-69-5	Packing material	1000	N.D
365	Bis(2-ethylhexyl) phthalate (DEHP) 鄰苯二甲酸二(2-乙基己基)酯 CAS No.117-81-7	Packing material	1000	N.D
366	Butyl benzyl phthalate (BBP) 鄰苯二甲酸甲苯基丁酯 CAS No.85-68-7	Packing material	1000	N.D
367	Dibutyl phthalate (DBP) 鄰苯二甲酸二丁酯 CAS No.84-74-2	Packing material	1000	N.D

Class B (Declaration items)

No.	Control items	Spec (ppm)	Concentration (ppm)	Use or Not	Contained purpose/ Remark
6	TBBP-A-bis Tetrabromobisphenol-A-bis-(2,3-dibromopropylether) 四溴雙酚-A-雙-(2.3-二溴丙醚) CAS No.21850-44-2	999999	Not use	N	
7	Polychlorinated biphenyls (PCBs) and terphenyls (PCTs) 多氯聯苯/多氯對聯三苯(多氯三聯苯) CAS No.1336-36-3; 61788-33-8; 26140-60-3 and others (please check Qisda Control item list)	0	Not use	N	

8	Polychlorinated naphthalene category (Cl>3, PCNs) 多氯奈及其衍生物 CAS No.70776-03-3 and others (please check Qisda Control item list)	0	Not use	N	
9	Short chain Chlorinated paraffins (SCCP, C10~C13), Cl≧50 wt% 短鏈氯化石蠟(氯化烷烴) CAS No.85535-84-8;108171-26-2;71011-12-6;61788-76-9	0	Not use	N	
10	Mirex 滅蟻靈 CAS No.2385-85-5	0	Not use	N	
11	Formaldehyde (monomer) 甲醛 CAS No.50-00-0	0	Not use	N	
12	PVC (Polyvinyl Chloride) and PVC blends 聚氯乙烯及聚氯乙烯混合物 CAS No.9002-86-2	0	Not use	N	
13	Organic tin compounds (Tributyl tin TBT, Triphenyl tin TPT compounds) 有機錫(三丁基, 三苯基)錫化合物 CAS No. Multiple, please check Qisda Control item list	0	Not use	N	
14	Asbestos 石棉 CAS No.1332-21-4 and others (please check Qisda Control item list)	0	Not use	N	
15	AZO compounds 偶氮化合物 CAS No. Multiple, please check Qisda Control item list	0	Not use	N	
16	Ozone Depleting Substance (CFCs, HCFCs, Halon, HBFCs, CCl4, C2H3Cl3, CH3Br) 破壞臭氧層物質(氟氯碳化物, 含氯氟烴, 海龍, 含溴氟烴, 四氯化碳, 1,1,1-三氯乙烷, 溴化甲烷) CAS No. Multiple, please check Qisda Control item list	0	Not use	N	
17	(for packing material supplier only) Lead+Cd+Hg+Cr6+ (此項只適用包裝材供應商) 鉛+鎘+汞+六價鉻	100	Not use	N	
19	Nickel and its compoundn 鎳及鎳化合物 CAS No.7440-02-0 and any substances contains Nickel shall be declare.	999999	Not use	N	

20	Antimony and its Compounds 銻及銻化合物 CAS No.7440-36-0; 1309-64-4; 1314-60-9 and any substances contains Antimony shall be declare.	1000	Not use	N	
21	Arsenic and its Compounds 砷及砷化合物 CAS No.7440-38-2;1303-00-0 and any substances contains Arsenic shall be declare.	0	Not use	N	
22	Beryllium and its Compounds 鈹及鈹化合物 CAS No.7440-41-7; 11133-98-5 and any substances contains Beryllium shall be declare.	1000	Not use	N	
23	Cobalt and its Compounds 鈷及鈷化合物 CAS No.7440-48-4 and any substances contains Cobalt shall be declare.	999999	Not use	N	
24	Selenium and its Compounds 硒及硒化合物 CAS No.7782-49-2 and any substances contains Selenium shall be declare.	999999	Not use	N	
28	Pentachlorophenol (PCP) 五氯酚 CAS No.87-86-5 and others (please check Qisda Control item list)	0	Not use	N	
29	Halogenated Aromatic Compounds (HACs) 鹵化芳香族 CAS No. Multiple, please check Qisda Control item list	30	Not use	N	
31	Benzene 苯 CAS No.71-43-2	5	Not use	N	
32	Toluene 甲苯 CAS No.108-88-3	999999	Not use	N	
33	Xylenes 二甲苯 CAS No.1330-20-7	999999	Not use	N	
34	Phenol (monomer) 酚,石碳酸(單體) CAS No.8002-07-1	999999	Not use	N	
37	Vinylchloride (monomer), VCM 氯乙烯(單體) CAS No.75-01-4	5	Not use	N	

38	Phthalates (all monomers, include DEHP, DBP, BBP, DINP, DIDP, DNOP, DNHP, DIOP, Bis(2-methoxyethyl) phthalate) 鄰苯二甲酸酯 Any substances contains Phthalates shall be declare.	100	Not use	N	
40	Amines, Amides 胺(類), 氨基化合物 CAS No. Multiple, please check Qisda Control item list	30	Not use	N	
42	Radioactive Substance 放射性物質 CAS No. Multiple, please check Qisda Control item list	0	Not use	N	
43	Polycyclic Aromatic Hydrocarbons (16 PAHs) 多環芳香族烴	999999	Not use	N	
44	Ethylene Glycolethers and Acetates (2-Methoxyethyl acetate and 2-Ethoxyethyl acetate) 乙二醇甲/乙醚及其醋酸酯 CAS No.111-15-9;110-49-6;110-80-5;111-96-6;109-86-4;32718-54-0;627-03-2	999999	Not use	N	
45	Bismuth and its Compounds 鉍及鉍化合物 CAS No.7440-69-9 and any substances contains Bismuth shall be declare.	999999	Not use	N	
46	Halogenated Naphthalenes 鹵化奈 CAS No.1321-65-9;1335-88-2;1321-64-8;2234-13-1	0	Not use	N	
49	2,4,6,-Tritertiarybutylphenol; 2,4,6-Tris (tert-butyl) phenol (2,4,6-TTBP) 2,4,6- 三 – t –丁基苯酚 (2,4,6-第三丁基苯酚) CAS No.732-26-3	0	Not use	N	
50	Hexachlorobenzene (HCB) 六氯苯 CAS No.118-74-1	0	Not use	N	
51	Aldrin 艾氏劑 CAS No.309-00-2	0	Not use	N	
52	Dieldrin 狄氏劑 CAS No.60-57-1	0	Not use	N	
53	Endrin 异狄氏劑 CAS No.72-20-8	0	Not use	N	
54	DDT 二氯二苯三氯乙烷 CAS No.50-29-3	0	Not use	N	

55	Bis(tributyltin) Oxide (TBTO) 雙三丁基氧化錫 CAS No.56-35-9	0	Not use	N	
56	N-P-Phenylenediamine N-P-二甲苯基-亞苯基二元胺 (苯二胺類化合物) CAS No. Multiple, please check Qisda Control item list	999999	Not use	N	
57	Chlorinated Hydrocarbons (CHCs)/Aliphatic CHCs/Halogenated Hydrocarbons 含氯碳氫化合物/脂肪族氯碳氫化合物/鹵化碳化氫類 CAS No. Multiple, please check Qisda Control item list	1000	Not use	N	
58	Yellow Phosphorous黃磷 CAS No.7723-14-0	999999	Not use	N	
59	Benzidine and its salts (4-(4-aminophenyl)aniline) 聯苯胺及其鹽類 CAS No. Multiple, please check Qisda Control item list	30	Not use	N	
60	4-Nitrodiphenyl and its salts 4-硝基聯苯及其鹽類 CAS No.92-93-3	100	Not use	N	
61	Bis (Chloromethyl) ether (BCME) 二氯甲基醚 (雙-(氯甲基)二醚) CAS No.542-88-1	0	Not use	N	
62	2-Naphylamine / Beta Naphthylamine and its salts 2-奈胺 / β奈胺及其鹽類 CAS No.91-59-8;553-00-4	30	Not use	N	
63	Rubber cement containing Benzene, where the Benzene accounts for more than 5% of 含苯交糊、含苯容量佔該交糊溶劑(含稀釋劑)超過5% CAS No.--	999999	Not use	N	
64	Chlordane 氯丹類 CAS No.52005-35-4; 57-74-9	0	Not use	N	
65	Toxaphene 毒殺酚 CAS No.8001-35-2	0	Not use	N	
66	DBBT (Monomethyl-dibromo-diphenyl methane) 單甲基二溴二苯基甲烷 CAS No.99688-47-8	0	Not use	N	

67	DBB (di-μ-oxo-di-n-butylstannichydroxyborane) 二- u -含氯 - 二- n -丁基羥基用烷 CAS No.75113-37-0	1000	Not use	N	
68	Monomethyl-tetrachloro-diphenyl methane (Ugilec 141) 單甲基四氯二苯基甲烷 CAS No.76253-60-6	0	Not use	N	
69	Monomethyl-dichloro-diphenyl methane (Ugilec 121or C21) 單甲基二氯二苯基甲烷 CAS No.81161-70-8	0	Not use	N	
70	Chromium Compounds 鉻化合物 (除鉻、金屬鉻以外的鉻化合物) Any substances contains Chromium compounds shall be declare. (Except for chromium and metallic chromium)	999999	Not use	N	
87	Creosotes oil-wood preservatives (Wood and Packing material only) CAS No. Multiple, please check Qisda Control item list	0	Not use	N	
88	Expanded polystyrene(EPS) foam	0	Not use	N	
90	Trichloroethylene (C2HC13) 三氯乙烯 CAS No.79-01-6	0	Not use	N	
91	Perchloroethylene (Tetrachloroethylene;C2C14) 四氯乙烯 CAS No.127-18-4	0	Not use	N	
92	HBFCs, Hydrobromofluorocarbons 其他不完全鹵化氟溴化物(氫氟溴碳化合物)	0	Not use	N	
93	TBBP-A Tetrabromobisphenol-A 四溴丙二酚/四溴雙酚-A CAS No.79-94-7	1000	Not use	N	
95	Hexachlorocyclohexane (HCH) isomers 六氯環已烷 CAS No.58-89-9;319-84-6;608-73-1;319-85-7	0	Not use	N	
98	Nonylphenol/ethoxylates (NP/NPEs/NPEOs) and related substances 壬基酚與壬基酚聚氧乙烯醚及相關物質 CAS No.25154-52-3;104-40-5;68412-54-2;9016-45-9 and others (please check Qisda Control item list)	1000	Not use	N	

99	alkylphenols 烷基酚	999999	Not use	N	
101	All synthtetic musks 所有合成麝香 (含二甲苯麝香, 酮麝香) CAS No.81-15-2;541-91-3;81-14-1	1000	Not use	N	
102	PFOS (Perfluorooctane sulfonates) in parts 產品中所含之全氟辛烷磺化物 CAS No.1763-23-1 and others (please check Qisda Control item list)	0	Not use	N	
103	PFOS (Perfluorooctane sulfonates) in preparations 準備作業時所含之全氟辛烷磺化物 CAS No.1763-23-1 and others (please check Qisda Control item list)	1000	Not use	N	
104	Tris-(1-aziridinyl) phosphinoxide (TEPA) 三啶基氧化磷 CAS No.5455-55-1	0	Not use	N	
105	Tri-(2,3-dibromo-propyl) phosphate (TRIS, Tris-BP, TDBPP) 三(2,3-二溴丙基)磷酸酯 CAS No.126-72-7	0	Not use	N	
106	Chlorobenzene 氯苯 CAS No.50717-45-8;180-90-7	999999	Not use	N	
107	2-(2H-1,2,3-Benzotriazole-2-YL)-4,6-di-tert-Butylphenol (UV-320) 2-(2'-羥基-3',5'-二叔丁基苯基)-苯並三唑 (特定苯並三氮唑); 紫外線吸收劑UV-320 CAS No.3846-71-7	0	Not use	N	
108	Dioxins and Furans (include PCDDs, PBDFs, PCDFs, PBDDs) 戴奧辛(二噩英)及夫喃 CAS No. Multiple, please check Qisda Control item list	0	Not use	N	
110	4-Aminodiphenyl/4-Aminodiphenyl and its salts 4-氨基聯苯/4-氨基聯苯及其鹽類 CAS No.92-67-1; 2113-61-3	30	Not use	N	
111	Cobalt Chloride 氯化鈷 CAS No.7646-79-9	0	Not use	N	
112	Hexabromocyclododecane (HBCD) and all major diastereoisomers 六溴環十二烷及其主要非對映異構體 CAS No. Multiple, please check Qisda Control item list	0	Not use	N	

113	Medium-chain chlorinated paraffins (MCCP) [UVCB substances consisting of more than or equal to 80% linear chloroalkanes with carbon chain lengths within the range from C14 to C17] ●Alkanes, C14-17, chloro ●Tetradecane, chloro derivs. ●Alkanes, C14-16, chloro ●di-, tri- and tetrachlorotetradecane 中鏈氯化石蠟[UVCB物質包含大於或等於80%的直鏈氯代烷烴，碳鏈長度在C14至C17範圍內] CAS No.85535-85-9;198840-65-2;1372804-76-6	1000	Not use	N	
114	Perfluorooctyl acid (PFOA) and individual salts and esters of PFOA 全氟辛酸鹽類及其酯類 CAS No. 68141-02-6 and others, please check Qisda Control item list	0	Not use	N	
115	DTDMAC/DODMAC/DSDMAC/DHTDMAC 二牛油基二甲基氯化銨/雙十八烷基二甲基氯化銨/二(硬化牛油)二甲基氯化銨 CAS No.68783-78-8; 107-64-2; 61789-80-8	999999	Not use	N	
116	Bisphenol A 雙酚A CAS No.80-05-7	200	Not use	N	
117	Triclosan 三氯沙(三氯羥基二苯醚) CAS No.3380-34-5	999999	Not use	N	
119	Perfluorocarbons (PFCs) 全氟碳化物 CAS No. Multiple, please check Qisda Control item list	0	Not use	N	
120	Hydrofluorocarbons (HFCs) 氫氟碳化物 CAS No. Multiple, please check Qisda Control item list	0	Not use	N	
121	Brominated flame retardents 溴系阻燃劑 CAS No. Multiple, please check Qisda Control item list	0	Not use	N	
123	Sulfur Hexafluoride (SF6) 六氟化硫 CAS No.2551-62-4	0	Not use	N	
124	4,4-Methylenedianiline (MDA, C13H14N2) 4-4二胺基二苯甲烷 CAS No.101-77-9	30	Not use	N	
126	Isopropyl bromide, 2-bromopropane 二溴丙烷 CAS No.75-26-3	999999	Not use	N	

128	Chloromethyl methylether (CMME) 氯甲基甲基醚 CAS No.107-30-2	0	Not use	N	
129	Benzotrichloride 三氯甲苯 CAS No.98-07-7	1	Not use	N	
130	Hydrogen sulfide (H2S) 硫化氫 CAS No.7783-06-4	999999	Not use	N	
131	6-hydroxy-7-methoxy-5-benzofuranacrylic acid delta-lactone (8-MOP) 8-甲氧基補骨酯 (Methoxsalen) CAS No.298-81-7	999999	Not use	N	
132	Ethyleneoxide (Dimethylene;Oxirane) 環氧乙烷 CAS No.75-21-8	999999	Not use	N	
136	PBDOs, PBBOs 多溴聯苯醚氧化物 CAS No.--	999999	Not use	N	
137	Beryllium Oxide 氧化鈹	1000	Not use	N	
146	Anthracene 蒽 CAS No.120-12-7	1	Not use	N	
148	Perchlorates 過氯酸鹽 CAS No. Multiple, please check Qisda Control item list	0.006	Not use	N	
153	Perfluoro alkyl sulfonates (PFAS) 全氟烷基磺酸鹽 CAS No. Multiple, please check Qisda Control item list	0	Not use	N	
154	Heptachlor 飛佈達 CAS No.76-44-8	0	Not use	N	
155	Dicofol 大克蟎; 三氯殺蟎醇; (2,2,2 三氯 1,1 雙(4 氯苯基)乙醇) CAS No.115-32-2	0	Not use	N	
156	Halogenated diarylalcanes and Halogenatedbenzenes 鹵代二芳基類及鹵代苯類 CAS No.133059-44-6	999999	Not use	N	
157	Hexachloro-1,3-butadiene (HCBD) 六氯丁二烯 CAS No.87-68-3	0	Not use	N	
158	Sodium dichromate, dihydrate 重鉻酸鈉二水合物 CAS No.7789-12-0;10588-01-9	1000	Not use	N	

159	Lead hydrogen arsenate 砷酸氢铅 CAS No.7784-40-9	1000	Not use	N	
160	Triethyl arsenate 三乙基砷酸酯 CAS No.15606-95-8	999999	Not use	N	
161	N-Nitrosamines N-亞硝胺 CAS No. Multiple, please check Qisda Control item list	1000	Not use	N	
162	Pentachlorobenzene 五氯苯 CAS No.608-93-5	0	Not use	N	
163	Tetrachlorobenzene, all members 四氯苯 CAS No.634-66-2; 634-90-2; 95-94-3; 12408-10-5; 84713-12-2	0	Not use	N	
164	Hexachloroethane 六氯乙烷 CAS No.67-72-1	0	Not use	N	
165	DMF (Dimethylfumarate) 富馬酸二甲酯 CAS No.624-49-7	0	Not use	N	
166	Coal Tar Distillates, heavy oils 餾出液（煤焦油），重油，重蒽油 CAS No.90640-86-1	999999	Not use	N	
167	Coal Tar Distillates, heavy oil, pyrene fraction 餾出液（煤焦油），重油，芘組分，重蒽油的重蒸餾物 CAS No.91995-42-5	999999	Not use	N	
168	Coal Tar residues, pitch distn 殘餘物（煤焦油），瀝青蒸餾物；瀝青重蒸餾物 CAS No.92061-94-4	999999	Not use	N	
169	Coal Tar residues, pitch pyrene fraction CAS No.91995-52-7	999999	Not use	N	
170	Coal Tar residues, pitch high temeperature 瀝青，煤焦油，高溫；瀝青 CAS No. 65996-93-2	1000	Not use	N	
171	Chlorinated flame retardants (CFR) 氯系阻燃劑 CAS No. Any substances contains Chlorinated flame retardants shall be declare.	0	Not use	N	
172	2,4-Dinitrotoluene 2,4-二硝基甲苯 CAS No.121-14-2	1000	Not use	N	
173	Anthracene oil 蒽油 CAS No.90640-80-5	1000	Not use	N	

174	Anthracene oil, anthracene paste, distn. Lights 蒽油, 蒽糊, 輕油 CAS No.91995-17-4	999999	Not use	N	
175	Anthracene oil, anthracene paste, anthracene fraction 蒽油, 蒽糊, 蒽餾分離液 CAS No.91995-15-2	999999	Not use	N	
176	Anthracene oil, anthracene-low 蒽油, 含蒽量少 CAS No.90640-82-7	999999	Not use	N	
177	Anthracene oil, anthracene paste 蒽油, 蒽糊 CAS No.90640-81-6	999999	Not use	N	
179	Aluminosilicate, Refractory Ceramic Fibres (RCF) 矽酸鋁, 陶瓷耐火纖維 CAS No.--	999999	Not use	N	
180	Zirconia Aluminosilicate, Refractory Ceramic Fibres (Zr-RCF) CAS No.--	999999	Not use	N	
181	Lead chromate molybdate sulfate red (C.I. Pigment Red 104) 紅色鉬鉻酸鉛硫酸鹽 (C.I.紅色顏料 104) CAS No.12656-85-8	1000	Not use	N	
182	Acrylamide 丙烯醯胺 CAS No.79-06-1	1000	Not use	N	
183	Tris(2-chloroethyl)phosphate TCEP, 三2-(氯乙基)磷酸酯, 三氯乙基磷酸酯阻燃增塑劑 CAS No.115-96-8	1000	Not use	N	
184	Lead chromate 鉻酸鉛 CAS No.7758-97-6	1000	Not use	N	
185	Lead sulfochromate yellow (C.I. Pigment Yellow 34) 黃色硫化鉻酸鉛 (C.I.黃色顏料 34) CAS No.1344-37-2	1000	Not use	N	
186	Diarsenic Pentoxide 五氧化二砷 CAS No.1303-28-2	1000	Not use	N	
187	Diarsenic Trioxide 三氧化二砷 CAS No.1327-53-3	1000	Not use	N	
188	Phthalates (DEHP,DBP,BBP,DIBP) CAS No.117-81-7; 84-74-2; 85-68-7; 84-69-5	999999	Not use	N	

189	Phthalates (DINP, DIDP, DNOP) CAS No.28553-12-0;68515-48-0;26761-40-0;68515-49-1;117-84-0;71549-78-5	999999	Not use	N	
190	Persistent Organic Pollutants (POPs 持久性有機汙染物) CAS No. Multiple, please check Qisda Control item list	0	Not use	N	
192	Triphenyl phosphate (TPP) 磷酸三苯脂 CAS No.115-86-6	1000	Not use	N	
194	Dioctyltin oxide (DOT) and its compound 二辛基錫化合物 CAS No. Multiple, please check Qisda Control item list	1000	Not use	N	
195	Dibutyltin oxide (DBT) and its compound 二丁基锡化合物 CAS No. Multiple, please check Qisda Control item list	1000	Not use	N	
196	Boric acid 硼酸 CAS No.10043-35-3; 11113-50-1	999999	Not use	N	
197	Disodium tetraborate anhydrous 無水四硼酸二鈉 CAS No.1303-96-4;1330-43-4; 12179-04-3	999999	Not use	N	
198	Tetraboron disodium heptaoxide hydrate 水合硼酸鈉 CAS No.12267-73-1	999999	Not use	N	
199	Sodium chromate 鉻酸鈉 CAS No.7775-11-3	1000	Not use	N	
200	Potassium chromate 鉻酸鉀 CAS No.7789-00-6	1000	Not use	N	
201	Ammonium dichromate 重鉻酸銨 CAS No.7789-09-05	1000	Not use	N	
202	Potassium dichromate 重鉻酸鉀 CAS No.7778-50-9	1000	Not use	N	
203	1,2,3-Trichlorobenzene 1,2,3三氯苯 CAS No.87-61-6	999999	Not use	N	
204	1,2,4-Trichlorobenzene 1,2,4-三氯苯 CAS No.120-82-1	1000	Not use	N	
205	1,3,5-Trichlorobenzene 1,3,5-三氯苯 CAS No.108-70-3	999999	Not use	N	

206	Cobalt(II) sulphate 硫酸鈷 CAS No.10124-43-3	999999	Not use	N	
207	Cobalt(II) dinitrate 硝酸鈷 CAS No.10141-05-6	999999	Not use	N	
208	Cobalt(II) carbonate 碳酸鈷 CAS No.513-79-1	999999	Not use	N	
209	Cobalt(II) diacetate 醋酸鈷 CAS No.71-48-7	999999	Not use	N	
210	2-Methoxyethanol 乙二醇單甲醚 CAS No.109-86-4	1000	Not use	N	
211	2-Ethoxyethanol 乙二醇單乙醚 CAS No.110-80-5	999999	Not use	N	
212	Chromium trioxide 三氧化鉻 CAS No.1333-82-0	1000	Not use	N	
213	Chromic acid 鉻酸 CAS No.7738-94-5	1000	Not use	N	
214	Dichromic acid 重鉻酸 CAS No.13530-68-2	1000	Not use	N	
215	Oligomers of chromic acid and dichromic acid 鉻酸及重鉻酸的寡聚體 CAS No.--	1000	Not use	N	
216	Chromium(III) and chromium compounds in surface preparations of products and parts intended to come into direct and prolonged contact with the skin 使用於長時間接觸皮膚部位的三價鉻 CAS No.16065-83-1 and others	999999	Not use	N	
217	Latex and latex compounds in surface preparations of products and parts intended to come into direct and prolonged contact with the skin 使用於長時間接觸皮膚部位的乳膠 CAS No.9002-86-2	999999	Not use	N	
218	Phthalates (DIHP) 鄰苯二甲酸二(C6-8支鏈與直鏈)烷基酯，富C7 CAS No.71888-89-6	1000	Not use	N	
219	Phthalates (DHNUP) 鄰苯二甲酸二(C7-11支鏈與直鏈)烷基酯 CAS No.68515-42-4	1000	Not use	N	

220	4-[4,4'-bis(dimethylamino) benzhydrylidene] cyclohexa-2,5-dien-1-ylidene] dimethylammonium chloride (C.I. Basic Violet 3) 鹼性紫3, 結晶紫, 甲基紫, 龍膽紫 CAS No.548-62-9; 603-48-5; 14426-25-6	50	Not use	N	
221	2-ethoxyethyl acetate 乙二醇乙醚乙酸酯 CAS No.111-15-9	999999	Not use	N	
222	Strontium chromate 鉻酸鍶 CAS No.7789-06-2	1000	Not use	N	
223	Hydrazine 聯氨(水合肼) CAS No.7803-57-8, 302-01-2	999999	Not use	N	
224	1-methyl-2-pyrrolidone, N-methyl-2-pyrrolidone (NMP) N-甲基吡咯烷酮 CAS No.872-50-4	3000	Not use	N	
225	1,2,3-trichloropropane 1,2,3-三氯丙烷 CAS No.96-18-4	999999	Not use	N	
227	Triorganotin compounds, all members 所有三烴基錫化合物 CAS No. Multiple, please check Qisda Control item list	0	Not use	N	
228	Benzo(a)pyrene (BaP) 苯并(a)芘 BaP (C20H12) CAS No.50-32-8	0.5	Not use	N	
229	Dichromium tris(chromate) 鉻酸鉻 CAS No.24613-89-6	1000	Not use	N	
230	Potassium hydroxyoctaoxodizincatedi-chromate 氫氧化鉻酸鋅鉀 CAS No.11103-86-9	1000	Not use	N	
231	Pentazinc chromate octahydroxide 八氫氧化五鉻酸鋅 CAS No.49663-84-5	1000	Not use	N	
232	Formaldehyde, oligomeric reaction products with aniline (technical MDA) 甲醛與苯胺的寡聚反應物 CAS No.25214-70-4	1000	Not use	N	
233	Bis(2-methoxyethyl) phthalate (DMEP) 鄰苯二甲酸二(2-甲氧乙基)酯 CAS No.117-82-8	1000	Not use	N	

234	2-Methoxyaniline; o-Anisidine 鄰氨基苯甲醚 (鄰甲氧基苯胺) CAS No.90-04-0	30	Not use	N	
235	4-(1,1,3,3-tetramethylbutyl)phenol,(4-tert-Octylphenol) 對特辛基苯酚/辛基酚 CAS No.140-66-9	1000	Not use	N	
236	1,2-Dichloroethane 1,2-二氯乙烷 CAS No.107-06-2	1000	Not use	N	
237	Bis(2-methoxyethyl) ether 雙(2-甲氧基乙基醚) CAS No.111-96-6	1000	Not use	N	
238	Arsenic acid 砷酸 CAS No.7778-39-4	1000	Not use	N	
239	Calcium arsenate 砷酸鈣 CAS No.7778-44-1	999999	Not use	N	
240	Trilead diarsenate 砷酸鉛 CAS No.3687-31-8	1000	Not use	N	
241	N,N-dimethylacetamide (DMAC) N,N-二甲基乙酰胺 CAS No.127-19-5	3000	Not use	N	
242	2,2'-dichloro-4,4'-methylenedianiline (MOCA) 2,2'-二氯-4,4'-二氨基二苯基甲烷 CAS No.101-14-4	30	Not use	N	
243	Phenolphthalein 酚酞 CAS No.77-09-8	999999	Not use	N	
244	Lead azide Lead diazide 疊氮化鉛 CAS No.13424-46-9	1000	Not use	N	
245	Lead styphnate 中性斯蒂酚酸鉛 CAS No.15245-44-0	1000	Not use	N	
246	Lead dipicrate 苦味酸鉛 CAS No.6477-64-1	1000	Not use	N	
248	1,2-bis(2-methoxyethoxy)ethane (TEGDME; triglyme);Triethylene glycol dimethyl ether 三甘醇二甲醚 CAS No.112-49-2	999999	Not use	N	
249	1,2-dimethoxyethane;ethylene glycol dimethyl ether (EGDME) 1，2-二甲氧基乙烷 (乙二醇二甲醚) CAS No.110-71-4	999999	Not use	N	

250	Diboron trioxide 三氧化二硼 (硼酐, 氧化硼) B2O3 CAS No.1303-86-2	999999	Not use	N	
251	Formamide 甲醯胺 (氨基甲醛;甲酰胺) CAS No.75-12-7	999999	Not use	N	
252	Lead(II)bis(methanesulfonate);Methanesulfonic acid, lead(2+) salt 甲磺酸鉛(II)溶液 (甲基磺酸鉛) CAS No.17570-76-2	1000	Not use	N	
253	TGIC(1,3,5-tris(oxiranylmethyl)-1,3,5-triazine-2,4,6(1H,3H,5H)-trione) 異氰尿酸三縮水甘油酯 (1,3,5-三缩水甘油-S-三嗪三酮) CAS No.2451-62-9	999999	Not use	N	
254	β-TGIC(1,3,5-tris[(2S and2R)-2,3-epoxypropyl]-1,3,5-triazine-2,4,6-(1H,3H,5H)-trione) 異氰酸β-三縮水甘油酯 CAS No.59653-74-6	999999	Not use	N	
255	4,4'-bis(dimethylamino)benzophenone(Michler's ketone) 米氏酮 (4,4'-四甲基二氨二苯酮;4,4'-二(N,N-二甲氨基)二苯甲酮) CAS No.90-94-8	999999	Not use	N	
256	N,N,N',N'-tetramethyl-4,4'-methylenedianiline (Michler's base) 米氏鹼 (4,4'-亞甲基雙(N,N-二甲基苯胺)) CAS No.101-61-1	999999	Not use	N	
257	[4-[[4-anilino-1-naphthyl][4-(dimethylamino)phenyl]methylene]cyclohexa-2,5-dien-1-ylidene]dimethylammonium chloride (C.I. Basic Blue 26) 鹼性藍26 (維多利亞藍B) CAS No.2580-56-5	999999	Not use	N	
258	α,α-Bis[4-(dimethylamino)phenyl]-4(phenylamino)naphthalene-1-methanol (C.I. Solvent Blue 4) 溶劑藍4 CAS No.6786-83-0	999999	Not use	N	
259	4,4'-bis(dimethylamino)-4''-(methylamino)trityl alcohol (C.I. Solvent Violet 8) 溶劑紫8 (α,α-二[(二甲氨基)苯基]-4-甲氨基苯甲醇) CAS No.561-41-1	1000	Not use	N	
260	Polycyclic Aromatic Hydrocarbons (18 PAHs) 多環芳香族烴	0.5	Not use	N	

263	Cyclohexane 環己烷 CAS No.110-82-7	1000	Not use	N	
264	Specified Lead Carbons 特定碳酸鉛類 CAS No.598-63-0; 1319-46-6	1000	Not use	N	
265	Specific Lead Sulphates 特定硫酸鉛類 CAS No.7446-14-2; 15739-80-7	1000	Not use	N	
266	Other Organic Tin compounds (except tri- and di-substituted organic tin compounds) 其他有機錫化合物 (除三取代與二取代有機錫化合物) CAS No.1461-25-2; 597-64-8; 595-90-4; 15231-57-9; 51590-67-1; 3091-32-5; 2406-68-0	1000	Not use	N	
267	(only for packing material) Halogened polymers used in plastic packing material 塑膠包材中使用之鹵系化合物以及鹵系樹脂 CAS No.7782-41-4;7726-95-6;7782-50-5;9002-86-2 and any substances contains Halogened polymers in packing material shall be declare.	-	Not use	N	
268	Tri-o-cresyl phosphate or Tricresyl phosphate (TCP) 磷酸三甲苯酯 CAS No.1330-78-5	1000	Not use	N	
269	[Phthalato(2-)]dioxotrilead 二鹽基鄰苯二甲酸鉛 CAS No.69011-06-9	1000	Not use	N	
270	1,2-Benzenedicarboxylic acid, dipentylester, branched and linear (bis-C5-alkyl-(linear and branched)phthalate) 支鏈和直鏈1，2-苯二羧二戊酯 CAS No.84777-06-0	1000	Not use	N	
271	1,2-Diethoxyethane (Diethyl glycol; Ethylene Glycol Diethyl Ether) 乙二醇二乙醚 CAS No.629-14-1	999999	Not use	N	
272	1-Bromopropane 溴代正丙烷 CAS No.106-94-5	0	Not use	N	
273	3-Ethyl-2-methyl-2-(3-methylbutyl)-1,3-oxazolidine 3-乙基-2-甲基-2-(3-甲基丁基)噁唑烷 CAS No.143860-04-2	999999	Not use	N	

274	4-(1,1,3,3-Tetramethylbutyl)phenol, ethoxylated (covering well-defined substances and UVCB substances, polymers and homologues) 乙氧化 4-(1,1,3,3-四甲基丁基)苯酚(含蓋明確定義物質、UVCB 物質、聚合物與同系物) CAS No.2315-67-5;9036-19-5;9002-93-1;2497-59-8;2315-61-9	1000	Not use	N	
275	4,4'-Methylenedi-o-toluidine 4,4'-二氨基-3,3'-二甲基二苯甲烷 CAS No.838-88-0	30	Not use	N	
276	4,4'-Oxydianiline 4,4'-二氨基二苯醚 CAS No.101-80-4	30	Not use	N	
277	4-Aminoazobenzene (4-Phenylazoaniline, Aniline Yellow) 4-阿基苯甲酯 CAS No.60-09-3	30	Not use	N	
278	4-Methyl-m-phenylenediamine (4-methyl-m-phenylenediamine (2,4-toluene-diamine)) 2,4-二氨基甲苯 CAS No.95-80-7	30	Not use	N	
279	4-Nonylphenol, branched and linear, ethoxylated 乙氧基化支鏈和直鏈-4-壬基酚(烷基直鏈及/或支鏈以 9 個碳共價於乙氧化苯酚的對位, 含蓋所有由單一或多種異構物組合的 UVCB 物質、明確定義物質、聚合物與同系物) CAS No.Multiple, please check Qisda Control item list	1000	Not use	N	
280	6-Methoxy-m-toluidine; 2-Methoxy-5-methylaniline; p-Cresidine 2-甲氧基-5-甲基苯胺 CAS No.120-71-8	30	Not use	N	
281	Acetic acid, lead salt, basic 堿式乙酸鉛 CAS No.51404-69-4	1000	Not use	N	
282	Bis(pentabromophenyl) ether (DecaBDE) 十溴二苯醚 CAS No.1163-19-5	0	Not use	N	
283	Diazene-1,2-dicarboxamide (C,C'-azodi(formamide)) 偶氮二甲酰胺 CAS No.123-77-3	999999	Not use	N	
284	Dibutyltin dichloride (DBTC) 二丁基二氯化锡 CAS No.683-18-1	1000	Not use	N	

285	Diethyl sulphate 硫酸二乙酯 CAS No.64-67-5	999999	Not use	N	
286	Diisopentylphthalate (DIPP) 鄰苯二甲酸二异戊酯 CAS No.605-50-5	1000	Not use	N	
287	Dimethyl sulphate 硫酸二甲酯 CAS No.77-78-1	999999	Not use	N	
288	Dinoseb 二硝丁酚 (地樂酚) CAS No.88-85-7	999999	Not use	N	
289	Dioxobis(stearato)trilead 双(十八酸基)二氧代三鉛 CAS No.12578-12-0	1000	Not use	N	
290	Fatty acids, C16-18, lead salts C16-18- 脂肪酸鉛鹽 CAS No.91031-62-8	1000	Not use	N	
291	Furan 呋喃 CAS No.110-00-9	999999	Not use	N	
292	Henicosafluoroundecanoic acid 全氟十一烷酸 CAS No.2058-94-8	0.025	Not use	N	
293	Heptacosafluorotetradecanoic acid 全氟代十四酸 CAS No.376-06-7	0.025	Not use	N	
294	Lead bis(tetrafluoroborate) 四氟硼酸鉛 CAS No.13814-96-5	1000	Not use	N	
295	Lead cyanamidate 氨基氰鉛(2+)鹽(1:1) CAS No.20837-86-9	1000	Not use	N	
296	Lead dinitrate 硝酸鉛 CAS No.10099-74-8	1000	Not use	N	
297	Lead monoxide 氧化鉛(黃丹) PbO CAS No.1317-36-8	999999	Not use	N	
298	Lead oxide sulphate 碱式硫酸鉛 CAS No.12036-76-9	1000	Not use	N	
299	Lead tetroxide 四氧化三鉛 Pb3O4 CAS No.1314-41-6	1000	Not use	N	
300	Lead titanium trioxide 鈦酸鉛 CAS No.12060-00-3	1000	Not use	N	
301	Lead Titanium Zirconium Oxide 鈦酸鉛鎬 CAS No.12626-81-2	1000	Not use	N	

302	Methoxyacetic acid 甲氧基乙酸 CAS No.625-45-6	999999	Not use	N	
303	N,N-dimethylformamide (Formyldimethylamine) N,N-二甲基甲酰胺 CAS No.68-12-2	1000	Not use	N	
304	N-methylacetamide N-甲基乙酰胺 CAS No.79-16-3	999999	Not use	N	
305	N-pentyl-isopentylphthalate (nPiPP) 鄰苯二甲酸正戊基异戊基酯 CAS No.776297-69-9	1000	Not use	N	
306	o-Aminoazotoluene 鄰氨基偶氮甲苯(氨偶氮苄) CAS No.97-56-3	30	Not use	N	
307	o-Toluidine; 2-Aminotoluene 鄰甲苯胺 CAS No.95-53-4	30	Not use	N	
308	Pentacosafluorotridecanoic acid 全氟十三酸 CAS No.72629-94-8	0.025	Not use	N	
309	Pentalead tetraoxide sulphate 氧化鉛與硫酸鉛的複合物 CAS No.12065-90-6	1000	Not use	N	
310	Propylene oxide;1,2-epoxypropane; methyloxirane 環氧丙烷 CAS No.75-56-9	999999	Not use	N	
311	Pyrochlore, antimony lead yellow C.I.颜料黄41 CAS No.8012-00-8	1000	Not use	N	
312	Silicic acid, barium salt, lead-doped 摻雜鉛的矽酸鋇 CAS No.68784-75-8	1000	Not use	N	
313	Silicic acid, lead salt 矽酸鉛 CAS No.11120-22-2	1000	Not use	N	
314	Sulfurous acid, lead salt, dibasic 亞硫酸鉛(II) CAS No.62229-08-7	1000	Not use	N	
315	Tetraethyllead 四乙基鉛 CAS No.78-00-2	1000	Not use	N	
316	Tetralead trioxide sulphate (Lead Sulfate Tribasic) 三堿式硫酸鉛 CAS No.12202-17-4	1000	Not use	N	

317	Tricosafluorododecanoic acid 全氟十二烷酸 CAS No.307-55-1	0.025	Not use	N	
318	Basic lead carbonate (trilead bis(carbonate)dihydroxide) 堿式碳酸鉛 CAS No.1319-46-6	1000	Not use	N	
319	Trilead dioxide phosphonate 磷酸氧化鉛 CAS No.12141-20-7	1000	Not use	N	
320	Hexahydromethylphathalic anhydride, Hexahydro-4-methylphathalic anhydride, Hexahydro-1-methylphathalic anhydride, Hexahydro-3-methylphathalic anhydride 甲基六氫苯酐、4-甲基六氫苯酐、甲基六氫化鄰苯二甲酸酐、3-甲基六氫苯二甲酯酐 CAS No.25550-51-0; 19438-60-9; 48122-14-1; 57110-29-9	999999	Not use	N	
321	Cyclohexane-1,2-dicarboxylic anhydride [1]cis-cyclohexane-1,2-dicarboxylic anhydride [2]trans-cyclohexane-1,2-dicarboxylic anhydride [3][The individual cis- [2] and trans- [3] isomer substances and all possible combinations of the cis- and trans-isomers [1] are covered by this entry]. 六氫鄰苯二甲酸酐，包括該物質的左旋、右旋單體及所有左、右旋的組合 CAS No.85-42-7;13149-00-3;14166-21-3	999999	Not use	N	
323	Chlordecone 十氯酮 CAS No.143-50-0	0	Not use	N	
324	2-(2H-benzotriazol-2-yl)-4,6-ditertpentylphenol (UV-328) 紫外線吸收劑UV-328 CAS No.25973-55-1	0	Not use	N	
325	2-(2H-benzotriazol-2-yl)-4-(tert-butyl)-6-(sec-butyl) phenol (UV-350) (2-(2'-羟基-3'-異丁基-5'-叔丁基苯基)苯并三唑)UV-350 CAS No.36437-37-3	1000	Not use	N	
326	2,4-di-tert-butyl-6-(5-chlorobenzotriazol-2-yl)phenol (UV-327) 紫外線吸收劑UV-327 CAS No.3864-99-1	1000	Not use	N	
327	4-Nonylphenol, branched and linear, ethoxylated CAS No. Multiple, please check Qisda Control item list	1000	Not use	N	

328	Ammonium pentadecafluorooctanoate (APFO) CAS No.3825-26-1	0	Not use	N	
329	Cadmium oxide (CdO) 氧化鎘 CAS No.1306-19-0	100	Not use	N	
330	Dipentyl phthalate (DPP) 鄰苯二甲酸二戊酯 CAS No.131-18-0	1000	Not use	N	
331	Pentadecafluorooctanoic acid (PFOA) 全氟辛酸 CAS No.335-67-1	0	Not use	N	
332	Di-n-pentyl phthalate (DnPP) 鄰苯二甲酸二戊酯 CAS No.118-95-6	999999	Not use	N	
333	Di(2-Propyl Heptyl) phthalate (DPHP) 鄰苯二甲酸二（2-丙基庚）酯 CAS No.53306-54-0	999999	Not use	N	
334	Bis(2-methoxyethyl) phthalate 鄰苯二甲酸二(2-甲氧乙基)酯 (DMEP) CAS No.117-82-8	999999	Not use	N	
335	Dihexyl phthalate, Di-n-hexyl phthalate (DNHP) 鄰苯二甲酸二已酯 CAS No.84-75-3	1000	Not use	N	
336	Trixylyl phosphate 磷酸三（二甲苯）酯 CAS No.25155-23-1	1000	Not use	N	
337	Imidazolidine-2-thione; 2-imidazoline-2-thiol 亞乙基硫脲 CAS No.96-45-7	1000	Not use	N	
338	C.I. Direct Black 38; Disodium 4-amino-3-[[4'-[(2,4-diaminophenyl)azo][1,1'-biphenyl]-4-yl]azo] -5-hydroxy-6-(phenylazo)naphthalene-2,7-disulphonate 直接染料黑色38號 CAS No.1937-37-7	1000	Not use	N	
339	C.I. Direct Red 28; Disodium 3,3'-[[1,1'-biphenyl]-4,4'-diylbis(azo)]bis(4-aminonaphthalene-1- sulphonate) 直接染料紅色28號 CAS No.573-58-0	999999	Not use	N	
340	Cadmium sulfide (CdS) 硫化鎘 CAS No.1306-23-6	100	Not use	N	

341	Lead di(acetate) 醋酸鉛(Ⅱ) CAS No.301-04-2	1000	Not use	N	
342	Tris(2-chloro-1-methylethyl) phosphate (TCPP) 磷酸三(2-氯丙基)酯 CAS No.13674-84-5	1000	N.D	N	
343	Tris(1,3-Dichloro-2-propyl) phosphate (TDCPP) 磷酸三(1,3-二氯異丙基)酯 CAS No.13674-87-8	1000	N.D	N	
344	Phenylmercury acetate 乙酸苯汞 (醋酸苯汞) CAS No.62-38-4	1000	Not use	N	
345	Phenylmercury propionate 丙酸苯汞 CAS No.103-27-5	1000	Not use	N	
346	Phenylmercury 2-ethylhexanoate 異辛酸苯汞 CAS No.13302-00-6	1000	Not use	N	
347	Phenylmercury octanoate 辛酸苯汞 CAS No.13864-38-5	1000	Not use	N	
348	Phenylmercury neodecanoate 新癸酸苯汞 CAS No.26545-49-3	1000	Not use	N	
349	1,2-Benzenedicarboxylic acid, dihexyl ester, branched and linear (DIHP)鄰苯二甲酸二己酯（支鏈和直鏈） CAS No.68515-50-4	1000	Not use	N	
350	Cadmium chloride 氯化鎘 CAS No.10108-64-2	100	Not use	N	
351	Sodium perborate； perboric acid, sodium salt 過硼酸鈉水合物 CAS No.15120-21-5;13517-20-9;11138-47-9;125022-34-6;90568-23-3	1000	Not use	N	
352	Sodium peroxometaborate 過硼酸鈉 CAS No.7632-04-4	1000	Not use	N	
353	Benzenamine, N-phenyl-, Reaction Products with Styrene and 2,4,4-Trimethylpentene (BNST) 烷基化二苯胺(二苯胺與苯乙烯和 2,4,4-三甲基戊烯的反應產物) CAS No.68921-45-9	0	Not use	N	
354	Red phosphorus flame retardants 紅磷阻燃劑 CAS No.7723-14-0	0	Not use	N	

359	Methylenediphenyl diisocyanate (MDI) and its isomers 二苯基甲烷二異氰酸酯及其同分異構體 CAS No.26447-40-5; 101-68-8; 5873-54-1; 2536-05-2	1000	Not use	N	
360	Navy Blue; marineblau 018112; A mixture of: disodium (6-(4-anisidino)-3- sulfonato-2-(3,5-dinitro-2-oxidophenylazo)-1- naphtholato)(1-(5-chloro-2-oxidophenylazo)-2-naphtholato)chromate(1-);trisodium bis(6-(4-anisidino)-3-sulfonato-2-(3,5- dinitro-2-oxidophenylazo)-1-naphtholato)chromate(1-) 海軍藍 CAS No.118685-33-9	1000	Not use	N	
361	2-ethylhexyl 10-ethyl-4,4-dioctyl-7-oxo-8-oxa-3,5-dithia-4-stannatetradecanoate (DOTE) 二正辛基-双（2-乙基己基巯基乙酸酯）錫 CAS No.15571-58-1	1000	Not use	N	
362	Cadmium fluoride 氟化鎘 CAS No.7790-79-6	100	Not use	N	
363	Cadmium sulphate 硫酸鎘 CAS No.10124-36-4;31119-53-6	100	Not use	N	
364	Reaction mass of 2-ethylhexyl10-ethyl-4,4-dioctyl-7-oxo-8-oxa-3,5-dithia-4-stannatetradecanoate and 2-ethylhexyl10-ethyl-4-[[2-[(2-ethylhexyl)oxy]-2-oxoethyl]thio]-4-octyl-7-oxo-8-oxa-3,5-dithia-4-stannatetradecanoate (reaction mass of DOTE and MOTE) 二正辛基-双（2-乙基己基巯基乙酸酯）錫和單辛基-三(2-乙基己基巯基乙酸酯）錫的反應物 CAS No.--	1000	Not use	N	
368	Diethyl phthalate (DEP) 鄰苯二甲酸二乙酯 CAS No.84-66-2	1000	Not use	N	
369	Di-n-octyl phthalate (DNOP) 鄰苯二甲酸二正辛酯 CAS No.117-84-0	1000	Not use	N	
370	Naphthalene (Nap)萘 Nap (C10H8) CAS No.91-20-3	1	Not use	N	

371	1,2-benzenedicarboxylic acid, di-C6-10-alkylesters;1,2-benzenedicarboxylic acid, mixed decyl and hexyl and octyl diesters with ≥ 0.3% of dihexyl phthalate (EC No. 201-559-5);鄰苯二甲酸二（C6-10）烷基酯; (癸基，己基，辛基）酯與1，2- 鄰苯二甲酸的複合物且鄰苯二甲酸二己酯含量≥ 0.3% CAS No.68515-51-5;68648-93-1	1000	Not use	N	
372	5-sec-butyl-2-(2,4-dimethylcyclohex-3-en-1-yl)-5-methyl-1,3-dioxane [1], 5-sec-butyl-2-(4,6-dimethylcyclohex-3-en-1-yl)-5-methyl-1,3-dioxane [2] [covering any of the individual isomers of [1] and [2] or any combination thereof] 5-仲丁基-2-（2,4- 二甲基環丁-3-烯-1-基）-5-甲基-1,3- 二惡烷[1]，5-仲丁基-2-（4,6-二甲基環己-3-烯-1-基）-5-甲基-1,3-二惡烷[2] [覆蓋任何[1]和[2]或者其任意組合的單獨的異構體(卡拉花醛及其同分易構物) CAS No.--	1000	Not use	N	
373	1,3-Propanesultone 1,3-丙烷磺内酯 CAS No.1120-71-4	1000	Not use	N	
374	Dicyclohexyl phthalate(DCHP) 鄰苯二甲酸二環己酯 CAS No.84-61-7	999999	Not use	N	
375	hexamethylene diacrylate (hexane-1,6-diol diacrylate) 1,6-己二醇二丙烯酸酯 CAS No.13048-33-4	999999	Not use	N	
376	Nitrobenzene 硝基苯 CAS No.98-95-3	999999	Not use	N	
377	Perfluorononan-1-oic acid (2,2,3,3,4,4,5,5,6,6,7,7,8,8,9,9,9-heptadecafluorononanoic acid and its sodium and ammonium salts 全氟壬酸及其鈉鹽和銨鹽 CAS No.375-95-1; 21049-39-8; 4149-60-4	999999	Not use	N	
378	Chloroform (Trichloromethane) 氯仿 (三氯甲烷) CAS No.67-66-3	999999	Not use	N	
379	Sulfur 硫 CAS No.7704-34-9	-	Not use	N	
380	Didecyl phthalate 鄰苯二甲酸二癸酯 CAS No.84-77-5	999999	Not use	N	
381	Dipropyl phthalate(DPRP) 鄰苯二甲酸二丙酯 CAS No.131-16-8	999999	Not use	N	

382	Specified PAHs (BaP,BeP,BaA,CHR,BbFA,BjFA,BkFA,DBAhA) 特定多環芳香族 CAS No.50-32-8; 192-97-2; 56-55-3; 218-01-9; 205-99-2; 205-82-3; 207-08-9; 53-70-3	0.5	Not use	N	
383	(±)-1,7,7-trimethyl-3-[(4-methylphenyl)methylene]bicyclo[2.2.1]heptane-2-one (4-methylbenzylidene camphor) (3E)-1,7,7-三甲基-3-[(4-甲基苯基)亞甲基]雙環[2.2.1]庚烷-2-酮(3-(4-甲基苯亞甲基)樟腦) CAS No.36861-47-9	999999	Not use	N	
384	1,7,7-trimethyl-3-(phenylmethylene)bicyclo[2.2.1]heptan-2-one (3-benzylidene camphor) 1,7,7-三甲基-3-(苯亞甲基)雙環[2,2,1]庚-2-酮（3-亞苄基樟腦） CAS No.15087-24-8	999999	Not use	N	
385	4-tert-butylphenol 4-叔丁基苯酚 CAS No.98-54-4	999999	Not use	N	
386	Benzene-1,2,4-tricarboxylic acid 1,2-anhydride (trimellitic anhydride) 1,2,4-苯三甲酸酐 CAS No.552-30-7	999999	Not use	N	
387	Nonadecafluorodecanoic acid (PFDA) and its sodium and ammonium salts 十九氟癸酸及其鈉和銨鹽 CAS No.3108-42-7; 335-76-2; 3830-45-3	999999	Not use	N	
388	p-(1,1-dimethylpropyl)phenol 對(1,1-二甲基丙基)苯酚 CAS No.80-46-6	999999	Not use	N	
389	Diisononyl phthalate (DINP) 鄰苯二甲酸二異壬酯 CAS No.28553-12-0;68515-48-0	1000	Not use	N	
390	Diisodecyl phthalate (DIDP) 鄰苯二甲酸二異癸酯 CAS No.26761-40-0;68515-49-1	1000	Not use	N	
397	Brominated organic compounds 有機溴化合物 Any substances contains Brominated organic compounds shall be declare.	-	Not use	N	
398	Chlorinated organic compounds 有機氯化合物 Any substances contains Chlorinated organic compounds shall be declare.	-	Not use	N	

399	Substance at nanoscale 奈米物質 CAS No.--	-	Not use	N	
400	n-hexane 正己烷 CAS No.110-54-3	-	Not use	N	
401	4-Heptylphenol, branched and linear [substances with a linear and/or branched alkyl chain with a carbon number of 7 covalently bound predominantly in position 4 to phenol, covering also UVCB- and well-defined substances which include any of the individual isomers or a combination thereof] 4-庚基苯酚, 支鍊及直鍊, 包括含有7個碳烷基鏈的所有獨立的同分異構體和所有含有線性或分支7個碳烷基鏈的UVCB物質 CAS No.--	999999	Not use	N	
402	Long-Chained Chlorinated Paraffins (LCCP) 長鏈氯化石蠟 CAS No.85535-86-0	-	Not use	N	
403	Perfluorohexane-1-sulphonic acid and its salts and related substances (PFHxS) 全氟己基磺酸及其鹽類與相關物質 CAS No. 355-46-4 ..Multiple, please check Qisda Control item list	0	Not use	N	
404	2-ethylhexyl diphenyl phosphate 乙基己基二苯基磷酸酯 CAS No.1241-94-7	1000	Not use	N	
407	Tri-n-butyl phosphate (TNBP) 磷酸三丁酯 CAS No.126-73-8	1000	Not use	N	
408	Bis(hexachloro- cyclopenta-dieno) Cyclooctane (Dechlorane A) 雙(六氯環戊二烯)環辛烷 CAS No.13560-89-9;135821-74-8;135821-03-3	0	Not use	N	
414	2,4,6-tris(2,4,6-tribromofenoxi)-1,3,5-triazin (TTBP-TAZ) 三(三溴苯氧基)三嗪; 三(三溴苯基)氰尿酸酯 CAS No.25713-60-4	999999	Not use	N	
435	Isopropylated triphenyl phosphate ; Tris(4-isopropylphenyl) phosphate; Phenol, isopropylated, phosphate (3:1) (PIP 3:1) 異丙基化磷酸三苯酯 CAS No.68937-41-7	0	Not use	N	

445	Chrysene (CHR) 屈 CAS No.218-01-9	0.5	Not use	N	
446	Benzo(a)anthracene (BaA) 苯并蒽 CAS No.56-55-3	0.5	Not use	N	
447	Cadmium nitrate 硝酸鎘 CAS No.10325-94-7	100	Not use	N	
448	Cadmium Hydroxide 氫氧化鎘 CAS No.21041-95-2	100	Not use	N	
449	Cadmium carbonate 碳酸鎘 CAS No.513-78-0	100	Not use	N	
450	Tricobalt tetraoxide containing ≥ 0.1% w/w nickel oxides 四氧化三鈷，其中氧化鎳含量含≥0.1%w/w CAS No.1308-06-1	999999	Not use	N	
451	Reaction products of 1,3,4-thiadiazolidine-2,5-dithione, formaldehyde and 4-heptylphenol,branched and linear (RP-HP) [with ≥0.1% w/w 4-heptylphenol, branched and linear] 1,3,4-噻二唑烷-2,5-二硫酮，甲醛和4-庚基苯酚的支鏈和直鏈（RP-HP）的反應產物[4-庚基苯酚，支鏈和直鏈含量≥0.1%w/w] CAS No.--	1000	Not use	N	
452	1,6,7,8,9,14,15,16,17,17,18,18 Dodecachloropentacyclo[12.2.1.16,9.02,13.05,10] octadeca-7,15-diene (Dechlorane PlusTM) [covering any of its individual anti- and syn-isomers or any combination thereof] 德克隆[包括所有反式和順式異構體及其組合] CAS No.135821-03-3;135821-74-8;13560-89-9	0	Not use	N	

454	PFOA- related compounds (i)perfluorooctanoic acid, including any of its branched isomers; (ii)its salts; (iii)PFOA-related compounds which, for the purposes of the Convention, are any substances that degrade to PFOA, including any substances (including salts and polymers) having a linear or branched perfluoroheptyl group with the moiety (C7F15)C as one of the structural elements. The following compounds are not included as PFOA-related compounds: (i)C8F17-X, where X = F, Cl, Br; (ii)fluoropolymers that are covered by CF3[CF2]n-R', where R'=any group, n> 16; (iii)perfluoroalkyl carboxylic acids (including their salts, esters, halides and anhydrides) with >= 8 perfluorinated carbons; (iv)perfluoroalkane sulfonic acids and perfluoro phosphonic acids (including their salts, esters, halides and anhydrides) with >= 9 perfluorinated carbons; (v)perfluorooctane sulfonic acid and its derivatives (PFOS) . CAS No. --	0	Not use	N	
455	Benzo[ghi]perylene 苯并[g,h,l]苝 CAS No.191-24-2	0.5	Not use	N	
456	Decamethylcyclopentasiloxane (D5) 十甲基環五矽氧烷 CAS No.541-02-6	999999	Not use	N	
457	Disodium octaborate 八硼酸二鈉 CAS No.12008-41-2	999999	Not use	N	
458	Dodecamethylcyclohexasiloxane (D6) 十二甲基環六矽氧烷 CAS No.540-97-6	999999	Not use	N	
459	Ethylenediamine 乙二胺 CAS No.107-15-3	999999	Not use	N	

460	Octamethylcyclotetrasiloxane (D4) 八甲基環四矽氧烷 CAS No.556-67-2	999999	Not use	N	
461	Terphenyl hydrogenated 氫化三聯苯 CAS No.61788-32-7	999999	Not use	N	
462	Indeno(1-,2,3-cd)pyrene (IND)茚并(1,2,3-cd)芘 IND CAS No.193-39-5	0.5	Not use	N	
463	Chrysene D12 氘代䓛 CAS No.1719-03-5	1	Not use	N	
464	Benz[a]anthracene D12 氘代苯并(A)蒽 CAS No.1718-53-2	1	Not use	N	
466	Benzophenone 二苯甲酮 CAS No.119-61-9	999999	Not use	N	
467	D&C Orange No.17 顏料橙17 CAS No.3468-63-1	999999	Not use	N	
468	1-Amino-2,4-dibromoanthraquinone 1-氨基-2,4-二溴蒽醌 CAS No.81-49-2	999999	Not use	N	
469	1-Amino-2-methylanthraquinone 分散橙11 CAS No.82-28-0	999999	Not use	N	
470	Direct Blue 6(Technical Grade) 直接藍6 CAS No.2602-46-2	999999	Not use	N	
471	Disperse Blue 1 分散藍1 CAS No.2475-45-8	50	Not use	N	
472	Direct Brown 95(Technical Grade) 直接棕95 CAS No.16071-86-6	999999	Not use	N	
473	2,2-bis(4'-hydroxyphenyl)-4-methylpentane CAS No.6807-17-6	999999	Not use	N	
474	Benzo[k]fluoranthene (BkFA) 苯并[k]荧蒽 CAS No.207-08-9	0.5	Not use	N	
475	Fluoranthene 荧蒽 FL CAS No.206-44-0; 93951-69-0	10	Not use	N	
476	Phenanthrene 菲 PA CAS No.85-01-8	10	Not use	N	

477	Pyrene 芘 Pyr (C16H10) CAS No.129-00-0; 1718-52-1	10	Not use	N	
478	Undecafluorohexanoic acid and its ammonium salt 十一氟己酸及其銨鹽 CAS No.307-24-4; 21615-47-4	999999	Not use	N	
479	INDIUM PHOSPHIDE CAS No.22398-80-7	999999	Not use	N	
480	Long-chain (C9-C21) PFCA(LC-PFCAs) -Perfluorocarboxylic acids that have the molecular formula CnF2n+1CO2H in which 8 ≤ n ≤ 20 (long-chain PFCA) and their salts -Compounds that consist of a perfluorinated alkyl group that has the molecular formula CnF2n+1 in which 8 ≤ n ≤ 20 and that is directly bonded to any chemical moiety other than a fluorine, chlorine or bromine atom 長鏈(C9-C21)全氟羧酸，其鹽类及其前體 CAS No. Multiple, please check Qisda Control item list	0	Not use	N	
481	2,3,3,3-tetrafluoro-2-(heptafluoropropoxy)propanoic acid, its salts and its acyl halides (covering any of their individual isomers and combinations thereof) 2,3,3,3-四氟-2-(七氟丙氧基)丙酸，即其鹽類與鹵化醯類(包括它們各自的異構物及其組合) CAS No.--	999999	Not use	N	
482	2-methoxyethyl acetate 2-甲氧基乙酸乙酯 CAS No.110-49-6	999999	Not use	N	
483	Tris(4-nonylphenyl, branched and linear) phosphite (TNPP) with ≥ 0.1% w/w of 4-nonylphenol, branched and linear (4-NP) 三(4-壬基苯基，支鍊和直鏈)亞磷酸酯(TNPP) (4-壬基酚4-NP，支鍊和直鏈濃度≥ 0.1%重量比) CAS No.--	999999	Not use	N	
484	Benzyl Chloride 氯代甲苯 CAS No.100-44-7	1	Not use	N	
485	4,4'-Dihydroxybenzophenone (DHBP) 4,4'-二羟基二苯甲酮 CAS No.611-99-4	999999	Not use	N	

486	Bisphenol-F (4,4'-methylenediphenol) 4,4'-二羟基二苯甲烷 CAS No.620-92-8	999999	Not use	N	
487	Bisphenol-S (4,4'-sulphonyldiphenol) 双酚 S CAS No.80-09-1	999999	Not use	N	
488	Neodymium 釹 CAS No.7440-00-8	999999	Not use	N	
489	Diundecyl phthalate (DuDP) 鄰苯二甲酸雙十一烷基酯 CAS No.3648-20-2	999999	Not use	N	
490	Tetrabromobisphenol A (TBBPA) additive and reactive CAS No.30496-13-0	999999	Not use	N	
491	Chlorinated polyethylene 氯化聚乙烯 CAS No.64754-90-1	1000	Not use	N	
493	Bis(2-ethylhexyl) tetrabromophthalate (TBPH or BEHTBP) covering any of the individual isomers and/or combinations thereof 雙(2-乙基己基)四溴鄰苯二甲酸酯，覆蓋任何單個異構體和/或其組合 CAS No.26040-51-7	999999	Not use	N	
495	2,3-dibromo-1-propanol (2,3-DBPA) 2,3-二溴-1-丙醇 (2,3-二溴丙醇) CAS No.96-13-9	1000	Not use	N	
496	Dibromoneopentyl glycol 二溴新戊二醇 CAS No.3296-90-0	1000	Not use	N	
498	Nickel sulfamate 氨基磺酸鎳 CAS No.13770-89-3	999999	Not use	N	
499	Perfluoro carboxylic acid and related compounds (PFCAs) 全氟羧酸 CAS No. Multiple, please check Qisda Control item list	0	Not use	N	
507	Small Brominated Alkyl Alcohols (SBAA) 小型溴化烷基醇 CAS No. Multiple, please check Qisda Control item list	999999	Not use	N	
509	Fluorinated ethers and alcohols 氟化醚和醇類 CAS No. Multiple, please check Qisda Control item list	0	Not use	N	

510	2-benzyl-2-dimethylamino-4'-morpholinobutyrophenone 2-苄基-2-(二甲基氨基)-4'-嗎啉基苯基丁酮 CAS No.119313-12-1	999999	Not use	N	
511	2-methyl-1-(4-methylthiophenyl)-2-morpholinopropan-1-one 2-甲基-1-(4-甲硫基苯基)-2-嗎啡基-1-丙酮 CAS No.71868-10-5	999999	Not use	N	
512	Diisohexyl phthalate 二異己基鄰苯二甲酸酯 CAS No.71850-09-4	999999	Not use	N	
513	Perfluorobutane sulfonic acid (PFBS) and its salts 全氟丁磺酸及其相關鹽類 CAS No.--	999999	Not use	N	
515	Trioctyl trimellitate (TOTM) 苯三酸三辛酯; 偏苯三酸三(2-乙基己酯) CAS No.3319-31-1	999999	Not use	N	
516	4-Chlorobenzotrichloride 4-氯三氯甲苯 CAS No.5216-25-1	1	Not use	N	
517	2,4,5-Trimethylaniline hydrochloride 2,4,5-三甲基苯胺鹽酸鹽 CAS No.21436-97-5	30	Not use	N	
518	Quinoline 喹啉 CAS No.91-22-5	50	Not use	N	
519	1-vinylimidazole 1-乙烯基咪唑 CAS No.1072-63-5	999999	Not use	N	
520	2-methylimidazole 2-甲基咪唑 CAS No.693-98-1	999999	Not use	N	
521	Butyl 4-hydroxybenzoate 4-羥基苯甲酸丁酯 CAS No.94-26-8	999999	Not use	N	
522	Dibutylbis(pentane-2,4-dionato-O,O')tin 二正丁基雙(乙醯丙酮基)錫 CAS No.22673-19-4	1000	Not use	N	
524	Benzo(b)fluoranthene (BbFA) 苯并(b)荧蒽 CAS No.205-99-2	0.5	Not use	N	
525	Benzo[j]fluoranthen (BjFA) 苯并(j)荧蒽 CAS No.205-82-3	0.5	Not use	N	
526	Benzo[e]pyren (BeP) 苯并(e)芘 CAS No.192-97-2	0.5	Not use	N	

527	Dibenzo(ah)anthracene (DBahA) 二苯并(a,h)蒽 CAS No.53-70-3	0.5	Not use	N	
528	Dibenzo[a,h]pyrene 二苯并(A,H)芘 CAS No.189-64-0	999999	Not use	N	
529	Dibenzo[a,i]pyrene 二苯并(A,I)芘 CAS No.189-55-9	999999	Not use	N	
530	Dibenzo[a,l]pyrene 二苯并(A,L)芘 CAS No.191-30-0	999999	Not use	N	
531	1-Methylpyrene1 1-甲基芘 CAS No.2381-21-7	999999	Not use	N	
534	Pentachlorothiophenol (PCTP) 五氯硫酚 CAS No.133-49-3	0	Not use	N	
536	Bis(2-(2-methoxyethoxy)ethyl) ether 四乙二醇二甲醚 CAS No.143-24-8	999999	Not use	N	
537	Dioctyltin dilaurate, stannane, dioctyl-, bis(coco acyloxy) derivs., and any other stannane, dioctyl-, bis(fatty acyloxy) derivs. wherein C12 is the predominant carbon number of the fatty acyloxy moiety CAS No.3648-18-8;91648-39-4	1000	Not use	N	
538	Decabromodiphenylethane (DBDPE) 十溴二苯乙烷 CAS No.84852-53-9	0	Not use	N	
539	1,4-Dioxane 1,4-二氧陸圜 (1,4-二惡烷) CAS No.123-91-1	0	Not use	N	
540	Pigment Violet 29 花艷紫紅29 CAS No.81-33-4	0	Not use	N	
541	Methylene Chloride 二氯甲烷 CAS No.75-09-2	0	Not use	N	
542	Carbon Tetrachloride 四氯化碳 CAS No.56-23-5	0	Not use	N	

543	2,2-bis(bromomethyl)propane1,3-diol (BMP) 2,2-雙(溴甲基)-1,3-丙二醇; 2,2-dimethylpropan-1-ol,tribromo derivative/3-bromo-2,2-bis(bromomethyl)-1-propanol (TBNPA) 3-溴-2,2-雙(溴甲基)-1-丙醇; 2,3-dibromo-1-propanol (2,3-DBPA) 2,3-二溴-1-丙醇 CAS No.3296-90-0; 36483-57-5; 1522-92-5; 96-13-9	999999	Not use	N	
544	2-(4-tert-butylbenzyl)propionaldehyde and its individual stereoisomers ●2-(4-tert-butylbenzyl)propionaldehyde ●(2S)-3-(4-tert-butylphenyl)-2-methylpropanal ●(2R)-3-(4-tert-butylphenyl)-2-methylpropanal 2-(4-叔丁基苄基)丙醛及其個別立體異構物 CAS No.80-54-6; 75166-30-2; 75166-31-3	999999	Not use	N	
545	4,4'-(1-methylpropylidene)bisphenol; (bisphenol B) 雙酚B CAS No.77-40-7	999999	Not use	N	
546	Glutaral 戊二醛 CAS No.111-30-8	999999	Not use	N	
547	Orthoboric acid, sodium salt (group) ●Boric acid, sodium salt ●Orthoboric acid, sodium salt ●boric acid (H3BO3), sodium salt,hydrate ●Boric acid (H3BO3), sodium salt (1:1) ●Boric acid (H3BO3), disodium salt ●Trisodium orthoborate 硼酸鈉鹽(群組) CAS No.1333-73-9; 13840-56-7; 25747-83-5; 14890-53-0; 22454-04-2; 14312-40-4	999999	Not use	N	

548	Phenol, alkylation products (mainly in para position) with C12-rich branched or linear alkyl chains from oligomerisation, covering any individual isomers and/ or combinations thereof (PDDP) ●phenol, (tetrapropenyl) derivatives ●Phenol, 4-isododecyl ●Phenol, dodecyl-, branched ●4-isododecylphenol ●Phenol, tetrapropylene ●phenol, 4-dodecyl-, branched 經由低聚合反應烷基化的苯酚產物(主要在對位位置)帶有12個碳的支鏈或直鏈，並涵蓋各種同分異構物及/或其各種組合 CAS No.74499-35-7; 27147-75-7; 121158-58-5; 27459-10-5; 57427-55-1; 210555-94-5	999999	Not use	N	
549	Diisooctyl phthalate (DIOP)， 1,2-Benzenedicarboxylic acid, diisooctyl ester 鄰苯二甲二異辛酯 CAS No.27554-26-3	999999	Not use	N	
550	Dimethyl phthalate (DMP) 鄰苯二甲酸二甲酯 CAS No.131-11-3	999999	Not use	N	
551	Specified PAHs (FL,PA,Pyr,Anthracene) 特定多環芳香族烴(FL,PA,Pyr,Anthracene) CAS No.206-44-0; 85-01-8; 129-00-0; 120-12-7	999999	Not use	N	
552	Methoxychlor 甲氧基氯 CAS No.72-43-5	999999	Not use	N	
553	1,3-Butadiene 1,3-丁二烯 CAS No.106-99-0	999999	Not use	N	
554	1,1-Dichloroethane 1,1-二氯乙烷 CAS No.75-34-3	999999	Not use	N	
555	Trans-1,2-dichloroethene 反-1,2-二氯乙烯 CAS No.156-60-5	999999	Not use	N	
556	1,2-Dichloropropane 1,2-二氯丙烷 CAS No.78-87-5	999999	Not use	N	
557	Ethylene dibromide 1,2-二溴乙烷 CAS No.106-93-4	999999	Not use	N	
558	1,3,4,6,7,8-Hexahydro-4,6,6,7,8,8-hexamethylcyclopenta[g]-2-benzopyran (HHCB) 1,3,4,6,7,8-六氫-4,6,6,7,8,8,-六甲基-環戊並[g]苯並吡喃 CAS No.1222-05-5	999999	Not use	N	

559	Phthalic anhydride 苯酐 CAS No.85-44-9	999999	Not use	N	
560	1,1,2 Trichloroethane 1,1,2-三氯乙烷 CAS No.79-00-5	999999	Not use	N	
567	6,6'-di-tert-butyl-2,2'-methylenedi-p-cresol (DBMC) 6,6'雙二叔丁基-2,2'-亞甲基雙對甲酚 CAS No.119-47-1	999999	Not use	N	
568	S-(tricyclo[5.2.1.0'2,6]deca-3-en-8(or 9)-yl) O-(isopropyl or isobutyl or 2-ethylhexyl) O-(isopropyl or isobutyl or 2-ethylhexyl) phosphorodithioate 硫-(三環[5.2.1.0'2,6]癸-3-烯-8(或9)-基) 氧-(異丙基或異丁基或2-乙基己基) 氧-(異丙基或異丁基或2-乙基己基)二硫代磷酸酯 CAS No.255881-94-8	999999	Not use	N	
569	tris(2-methoxyethoxy)vinylsilane 三(2-甲氧基乙氧基)乙烯基矽烷 CAS No.1067-53-4	999999	Not use	N	
570	(±)-1,7,7-trimethyl-3-[(4-methylphenyl)methylene]bicyclo[2.2.1]heptan-2-one covering any of the individual isomers and/or combinations thereof (4-MBC) (±)-1,7,7-三甲基-3-[(4-甲基苯基)亞甲基]二環[2.2.1]庚烷-2-酮，包括各個異構體和/或其組合 CAS No.--	999999	Not use	N	
572	Perfluorohexanoic acid (PFHxA) and its salts and related substances (APFHx) 全氟己酸(PFHxA)及其銨鹽(APFHx) CAS No. --	0.025	Not use	N	
573	Resorcinol /1,3-benzenediol 間苯二酚 CAS No. 108-46-3	999999	Not use	N	
574	Amitrole (Triazol-3-amine) 3-氨基-1,2,4-三氮唑 CAS No.61-82-5	999999	Not use	N	
575	Iprodione 異菌脲 CAS No.36734-19-7	999999	Not use	N	
576	Diisocyanates 二異氰酸酯類 CAS No. Multiple, please check Qisda Control item list	999999	Not use	N	

577	(4-Chlorophenyl) cyclopropylmethanone, O-[(4- nitrophenyl)methyl] oxime 4- 氯苯基丙基甲酮 CAS No.6640-25-1	999999	Not use	N	
584	2,4,6-Tribromophenol (TBP) 2,4,6-三溴苯酚 CAS No.118-79-6	999999	Not use	N	
585	N-(hydroxymethyl)acrylamide N- 羥甲基丙烯醯胺 CAS No. 924-42-5	999999	Not use	N	
586	(only for the enclosure and stand of electronic displays)Halogens -fluorine, chlorine, bromine, and iodine. From flame retardants and plasticizers 顯示器外殼與腳架中的鹵素塑化劑與阻燃劑(申報此項必須提供F, Cl, Br, I的測試報告) CAS No.7782-41-4; 7782-50-5; 7726-95-6; 7553-56-2	0	Not use	N	
587	(for packing material supplier only) DEHP+BBP+DBP+DIBP in Plasticized packaging material (此項只適用包裝材供應商) 塑料包裝中的DEHP+BBP+DBP+DIBP 總和 CAS No.117-81-7;84-74-2;85-68-7;84-69-5	-	Not use	N	
588	(for packing/Printed matter material only) Mineral oil aromatic hydrocarbons (MOAH) comprising 1 to 7 aromatic rings 此項只適用包材和印刷品中的礦物油MOAH碳氫化合物 1 到 7 芳香環含量	1000	Not use	N	
589	(for packing/Printed matter material only) Mineral oil aromatic hydrocarbons (MOAH) comprising 3 to 7 aromatic rings 此項只適用包材和印刷品中的礦物油MOAH碳氫化合物 3 到 7 芳香環含量	1	Not use	N	
590	(for packing/Printed matter material only) Mineral oil saturated hydrocarbons (MOSH) with 16 to 35 carbon atoms 此項只適用包材和印刷品中的礦物油 含 16 至 35 個碳原子的礦物油飽和烴(MOSH)	1000	Not use	N	
591	1,1'-[ethane-1,2-diylbisoxy]bis[2,4,6-tribromobenzene] 1,2-雙(2,4,6-三溴苯氧基)乙烷 CAS No. 37853-59-1	999999	Not use	N	
592	Barium diboron tetraoxide 偏硼酸鋇 CAS No. 13701-59-2	999999	Not use	N	

593	Isobutyl 4-hydroxybenzoate 4-羥基苯甲酸 2-甲基丙酯 CAS No. 4247-02-3	999999	Not use	N	
594	Melamine 三聚氰胺 CAS No. 108-78-1	999999	Not use	N	
595	Perfluoroheptanoic acid and its salts 全氟庚酸及其鹽類 CAS No. 6130-43-4;21049-36-5;375-85-9;20109-59-5	999999	Not use	N	
596	reaction mass of 2,2,3,3,5,5,6,6-octafluoro-4-(1,1,1,2,3,3,3-heptafluoropropan-2-yl)morpholine and 2,2,3,3,5,5,6,6-octafluoro-4-(heptafluoropropyl)morpholine 2,2,3,3,5,5,6,6-八氟-4-(1,1,1,2,3,3,3-七氟丙烷-2-基)嗎啉和2,2,3,3,5,5,5,6,6-八氟烷-4-(七氟丙基)嗎啉的反應物料 CAS No. --	999999	Not use	N	
603	Reporting PFAS (substances that contain at least one fully fluorinated methyl (CF3 -) or methylene (-CF2 -) carbon atom (without any H/Cl/Br/I atom attached to it).) 任何含有至少一個完全氟化的甲基 (CF3-) 或亞甲基 (-CF2-) 碳原子（不含任何 H/Cl/Br/I 連接）的PFAS物質	0	Not use	N	
604	bis(4-chlorophenyl) sulphone 4,4'-二氯二苯基碸 CAS No.80-07-9	999999	Not use	N	
605	Diphenyl(2,4,6-trimethylbenzoyl)phosphine oxide) (2,4,6-三甲基苯甲酰基)二苯基氧化膦 CAS No.75980-60-8	999999	Not use	N	
606	2-(2H-benzotriazol-2-yl)-4-(1,1,3,3-tetramethylbutyl)phenol 2-(2H-苯並三唑-2-基)-4-(1,1,3,3-四甲基丁基)苯酚 (紫外線吸收劑329) CAS No. 3147-75-9	999999	Not use	N	
607	2-(dimethylamino)-2-[(4-methylphenyl)methyl]-1-[4-(morpholin-4-yl)phenyl]butan-1-one 2-二甲氨基-2-(4-甲基)苄基-1-[4-(4-嗎啉基)苯基]-1-丁酮 CAS No. 119344-86-4	999999	Not use	N	
608	Bumetrizole 2-(5-氯-2-苯三唑基)-6-叔丁基-4-甲基苯酚 (紫外線吸收劑326) CAS No. 3896-11-5	999999	Not use	N	

609	Oligomerisation and alkylation reaction products of 2-phenylpropene and phenol 2- 苯基丙烯與苯酚的低聚合烷基化反應物 CAS No. --	999999	Not use	N	
611	Bis(α,α-dimethylbenzyl) peroxide 過氧化二異丙苯 CAS No. 80-43-3	999999	Not use	N	

四維精密材料股份有限公司

==========

物 質 安 全 資 料 表

一.製造商或供應商資料　　品名: CL02

物品中文名稱:和膠銅版商標紙	
產品編號: CL02	
製造商或供應商名稱: 四維精密材料股份有限公司	
製造商或供應商地址: 台灣省桃園市興華路12號	
諮詢者姓名及電話: +886-2-29991111 分機2510	
緊急聯絡電話: +886-2-29991111	傳真號碼: +886-2-29992050

二.辨識資料

組成成份		化學文摘社登記號碼	容許濃度		
中(英)文名稱	含量(%)	CAS.NO.	時量平均容許濃度TWA	短時間時量平均容許濃度STEL	最高容許濃度CEILING
Art Paper	70-80		未建立		
Rubber Adhesive	20-30		未建立		
Solvent	<0.1		未建立		

三、危害辨識資料

最重要危害與效應	健康危害效應(急性):略　　(慢性):長期吸入時會造成困倦
	環境影響:略
	物理性及化學性危害:略
	特殊危害:略
主要症狀:困倦、噁心	
物品危害分類:略	

四、急救措施

不同暴露途徑之急救方法:

吸入:若困倦時，將患者移至新鮮空氣處;若昏迷、呼吸急促時，應施行人工呼吸並緊急送醫。

皮膚接觸: 略

眼睛接觸: 略

食　　入: 略

最重要症狀及危害效應: 略

對急救人員之防護: 略

對醫師之提示: 略

五、滅火措施　　品名：CL02

適用滅火劑：水、乾粉、二氧化碳、泡沫與海龍。
滅火時可能遭遇之特殊危害：黑色煙霧吸入時肺部受損。
特殊滅火程序:略
消防人員之殊防護裝備：應佩戴適當防護具以避免吸入可能危害之煙氣。

六、洩漏處理方法

個人應注意事項:同一般塑膠處理方式。
環境注意事項：同一般塑膠處理方式。
清理方法：同一般塑膠處理方式。

七、安全處置與儲存方法

處置:同一般塑膠材料處置。
儲存:一般通風良好處。

八、暴露預防措施

工程控制:
控制參數: 八小時日時量平均容許濃度/短時間時量平均容許濃度/最高容許濃度：略 生物指標：略
個人防護設備: 呼吸防護:略 手部防護:略 眼睛防護:略 皮膚及身體防護:略
衛生措施：一般通風或局部排風設備

九、物理及化學特性

物質狀態：　糊狀物　粉末 ☑固體　液體 氣體					PH值：不適用 外觀：帶狀 氣味：芳香味
沸點：　F°　C°		熔點：　F°　C°		蒸氣壓：　psi	
蒸氣密度(空氣=1)：			比重(水=1)：0.95~1.05		
揮發速率(乙酸乙酯=1)：			水中溶解度:不溶解		

十.反應特性

安定性	安定	✓	應避免之狀況:
	不安定		
危害之聚合	可能發生		危害分解物:
	不會發生	✓	
不相容性	應避免之物質：略		

十一、毒性資料　　品名：CL02

急毒性:無
局部效應:無
致敏感性:無
慢毒性或長期毒性:長期吸入可能危害肺部，工作場所應通風良好。
特殊效應:無

十二、生態資料

可能之環境影響/環境流佈：文獻中尚無對生物體囤積分解物可能性之報導，長期並無有害之環境效應。

十三、廢棄處置方法

廢棄處置方法:焚化爐中焚毀後掩埋或直接掩埋。

十四、運送資料

國際運送規定：略
聯合國編號：略
國內運輸規定：略
特殊運送方法及注意事項：略

十五、法規資料

適用法規:無特定法規。

十六、其他資料

製表單位	名稱：四維精密材料/品保中心	四維精密材料(股)公司 品保中心 TEL:(03)3612123
	地址：桃園市興華路12號	
	電話：+886-33612123	
製表日期	2008 年 05 月 28 日	

1. 適用範圍：

各生產製程完成作業含(委外加工品)至入庫交貨前之成品檢驗之依據。

2. 作業說明：

2・1 於各生產製程作業完成入庫前，品保單位進行每批成品之相關檢驗工作，檢驗合格後方可辦理入庫交貨作業。

2・2 檢驗時，應先核對印製作業單及樣品資料是否與成品一致，核對無誤後開始進行檢驗；若客戶另有需求時，則依客戶之需求(項目、標準、方法)。

2・3 主要檢驗項目、內容、工具及方式：

項目	內　　容	工　　具	方　式
外觀	污髒、刮傷、白點.....等	樣品資料	目視檢驗
尺寸	間距錯誤、裁切歪曲....等	鋼直尺	實際尺寸
內容	重頁、版錯誤、裁到字..等	樣品資料、圖面、承認書	目視檢驗
材質	材質錯誤、絲向錯誤....等	樣品資料、圖面、承認書	目視檢驗
顏色	油墨過少、顏色錯誤....等	樣品資料、圖面、紙樣	目視檢驗
其他	混料、包裝錯誤.....等	樣品資料	目視檢驗

詳細內容請參閱〝不良缺點分類表〞(附件一)。

2・4 檢驗完畢後，應統計合格品數量及不合格數量和原因，且應標示並區隔之，詳依〝成品管制作業程序〞(Q208-04)。

2・5 檢驗完畢後，若有不良狀況需填寫品質履歷表(附件)(MJ-9013)時，應於樣品資料袋外，貼上一枚紅豆標籤，做為警示之用，方便提醒印製人員需特別注意。

3. 異常處理：

3・1 經品保單位判定不合格時，依〝不合格品管制作業程序〞(Q208-05)處理。

3・2 若須特採時，依〝特採作業程序〞(Q208-06)處理。

文件發行章 禁止影印

附件一：

不良缺點分類表

檢驗項目	代碼	缺點別	檢驗項目	代碼	缺點別
尺寸	A01	刀模錯誤	外觀	D17	軋型過斷
	A02	裁切歪曲		D18	軋型未斷
	A03	紙器軋歪		D19	裱背不良
	A04	糊盒歪曲		D20	燙金不良
	A05	折疊不良		D21	邊裂開
	A06	裁切尺寸錯誤		D22	噴到油
	A07	間距錯誤		D23	噴到油墨
	A08	邊距錯誤		D24	油墨未乾
材質	B01	材質錯誤		D25	膠裝不良
	B02	絲向錯誤		D26	沾到油墨
	B03	紙張起皺		D27	霧膜不良
	B04	材質不良		D28	壓力太重
顏色	C01	油墨過濃		D29	米信錯誤
	C02	顏色錯誤		D30	糊盒壓傷
	C03	油墨過少		D31	印刷不良
	C04	油墨乾掉	內容	E01	印刷位置錯誤
	C05	油墨不均		E02	裁到字
外觀	D01	重影		E03	頁序台序錯誤
	D02	糊字		E04	漏頁
	D03	斷字		E05	空白頁
	D04	斷線		E06	重頁
	D05	漏字		E07	序號錯誤
	D06	背印		E08	版錯誤
	D07	透印		E09	條碼錯誤
	D08	污髒		E10	裁到線
	D09	髒點	其他	F01	溝通不良
	D10	刮傷		F02	拼版誤差
	D11	白點		F03	印刷規位錯誤
	D12	上光不良		F04	印稿與印版不符
	D13	溢膠		F05	包裝錯誤
	D14	未粘合		F06	混料
	D15	裝釘不牢		F07	染色不均
	D16	穿線不牢		F08	輪距跳脫

文件發行章
禁止影印