REV.	DATE	DESCRIPTION	BY	APVD
A	20250324	5A改1A料號進階，增加Notes敘述1(增加空白料號)	COCO	
B	20250424	增加REV.:3，增加PO number:，料號進階	COCO	

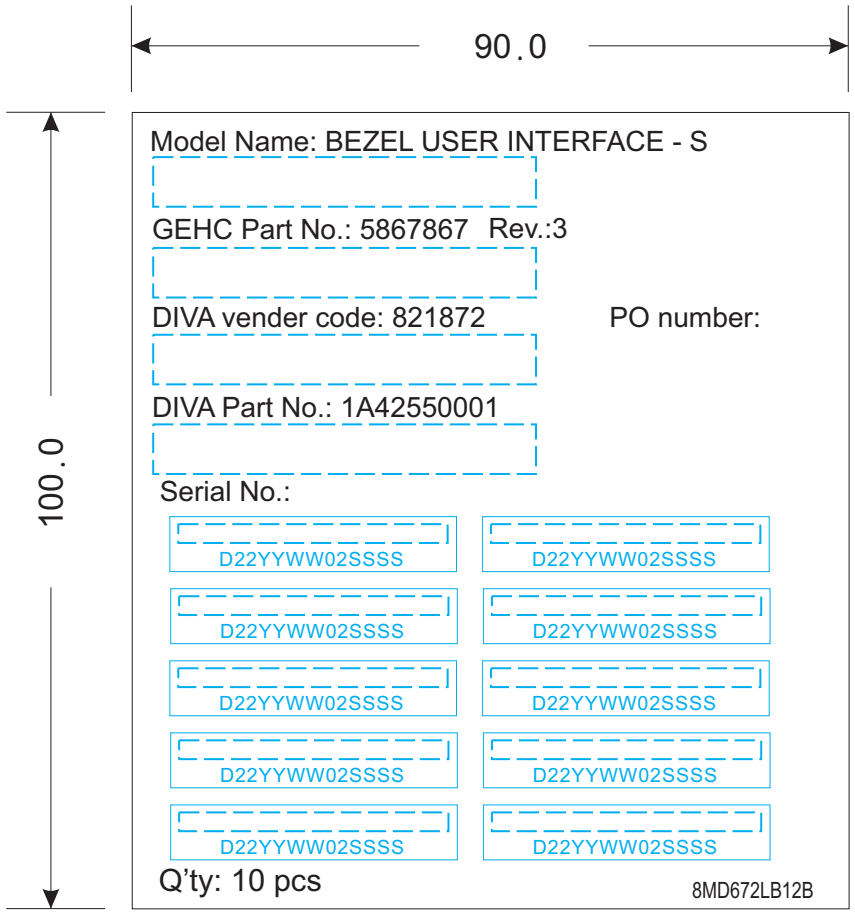

Notes:

1.Use 3MDL4XLB440 Blank label.

2.Use Ricoh #B110A ribbon.

3.S/N.另外印貼紙貼上

4.S/N Use 3MDL4XLB910 Blank label

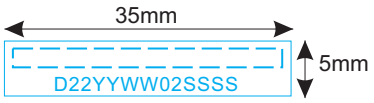

PM	THIRD ANGLE PROJECTION	UNITS : mm	SCALE:1 / 1	SHEET:1 / 1	MODEL NO.: BEZEL USER INTERFACE – S
		MATERIAL:See notes		TREATMENT:See notes	
PE / PCD	DSGD by COCO	2025/03/24	PART NAME:Carton Label		
	APVD by		PART NO.: 8MD672LB12B		VER.0
	APVD No.:	FILE NAME : BEZEL USER INTERFACE – S.cdr	DIVA Laboratories ,Ltd.		