REV.	DATE	DESCRIPTION	BY	APVD

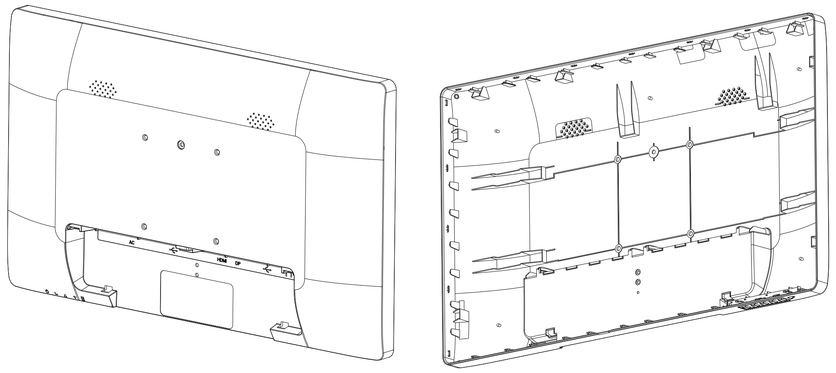



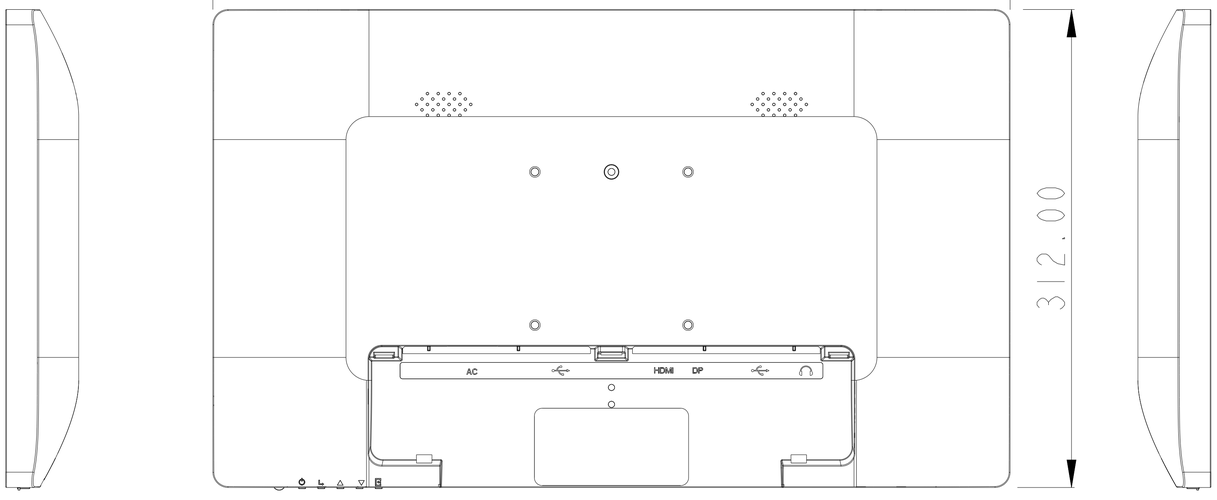

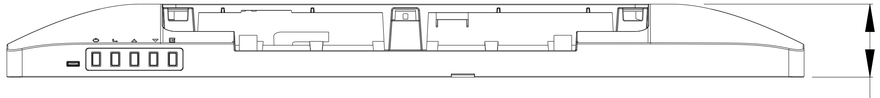

比例 3/10

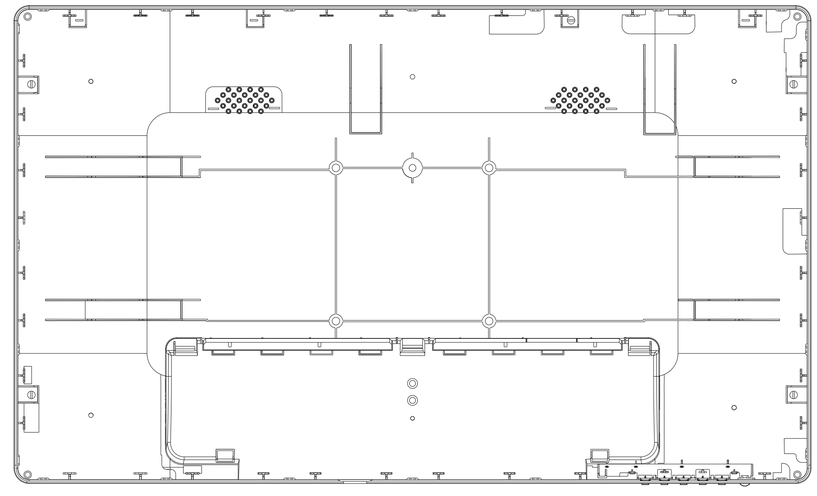

RANGE OF DIMENSION	TOLERANCE CLASS DESIGNATION			THIRD ANGLE PROJECTION	UNITS: mm	SCALE: 1/2	SHEET: 1 OF 1	MODEL NO.:
		V			MATERIAL:		TREATMENT:	
	fine	medium	coarse					
UP TO 3	±0.05	±0.1	±0.2	DSGD by	Owen	Apr-10-25	PART NAME:	
OVER 3~6	±0.05	±0.1	±0.3					
OVER 6~30	±0.1	±0.2	±0.5	CHK by			DIVA P/N:	
OVER 30~120	±0.15	±0.3	±0.8					
OVER 120~400	±0.2	±0.5	±1.2	APVD by			Qisda NO.:	
OVER 400~1000	±0.3	±0.8	±2.0					
OVER 1000~2000	±0.5	±1.2	±3.0	APVD NO.:		3D FILE NAME: 00215.000_REAR_COVER_QD2_IP65	DIVA Laboratories ,Ltd.	
OVER 2000~4000	-	±2.0	±8.0					
ANGLE ±1° (±1.75/100)								