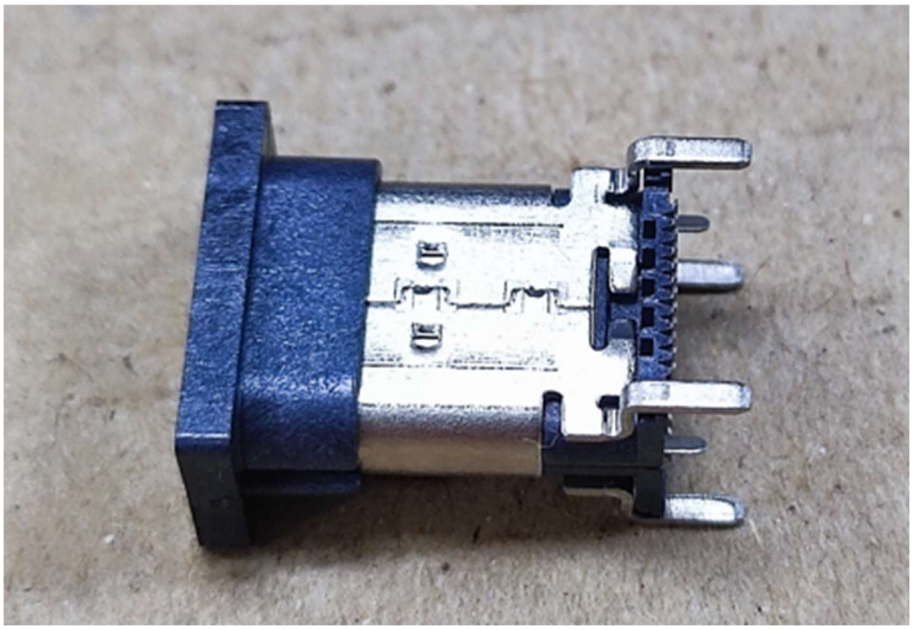

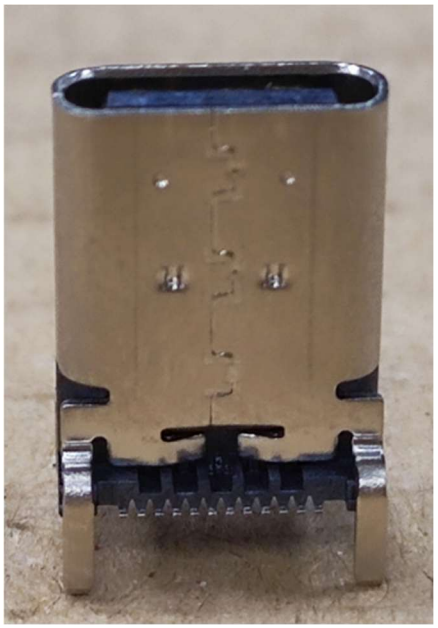

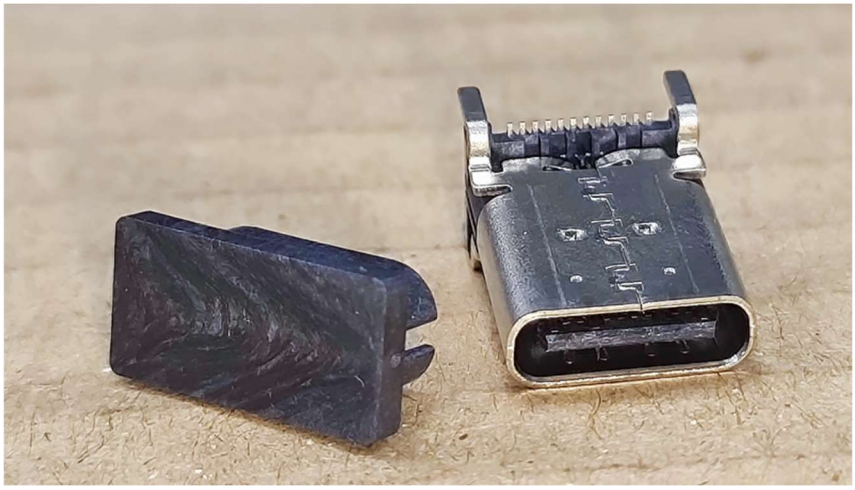

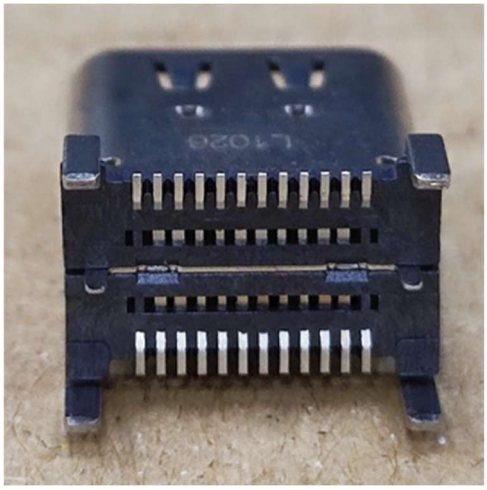





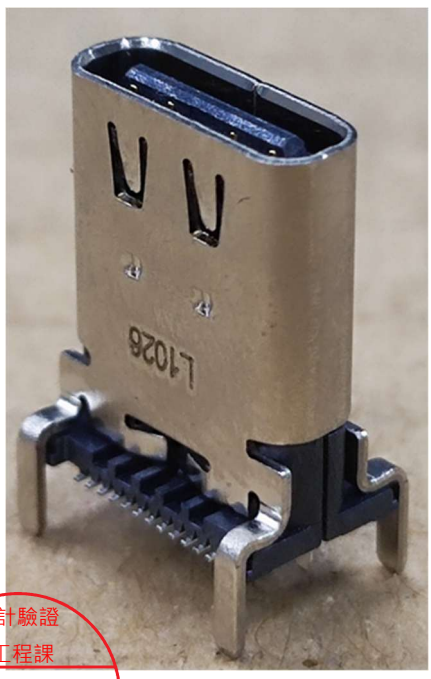

設計驗證
工程課
2025 -04- 25
發行
益鑫科技開發股份有限公司

制定日	2025年4月25日
改定日	

〈 新規 ・ 変更 〉

鈺緯科技開發股份有限公司

納 入 仕 様 書

製品名：　USB3.0 F (C TYPE,NDS21-AK5V21,ACON)

お客様品番	3FU02402010 (F0318)
メーカー品番	NDS21-AK5V21

設計驗證
工程課
2025 -04- 25
發行
鈺緯科技開發股份有限公司

****
〒222-0033
神奈川県横浜市港北区新横浜1-13-12-5F　ｸﾘﾝｹﾞﾙﾝﾍﾞﾙｸﾞﾋﾞﾙﾃﾞｨﾝｸﾞ
TEL：045-478-4380(代表)/ FAX：045-478-4381

Klingelnberg Building, 5F, 1-13-12 Shinyokohama,Kohoku-ku,
Yokohama-city,Kanagawa-ken,Japan
****

連展科技株式会社/ACON JAPAN Corp.

HALOGEN FREE

REV.	ECR#	DESCRIPTION	DATE	DRAWN	CHECKED	APPROVED
0	SZECR20090	NEW RELEASE PER NPR20026	05/28/20'	David.Huang		

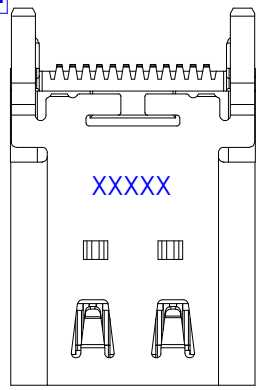

DATE CODE :

X X XX X
① ② ③ ④

① FACTORY :
L : LONGGANG T : TIANJIN K : KUNSHAN
② YEAR :
16 > 6 17>7 1X>X
③ WEEK :
01~53
④ DAY
1~7

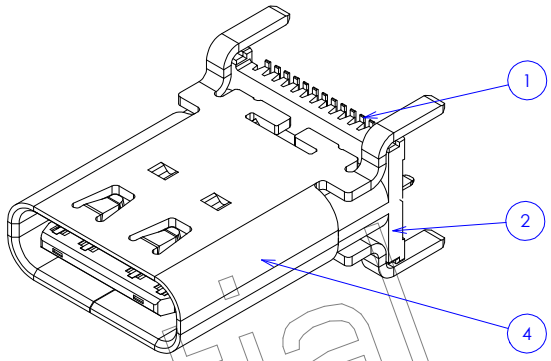

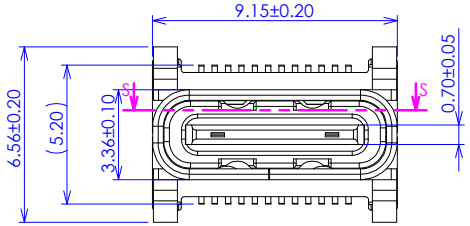

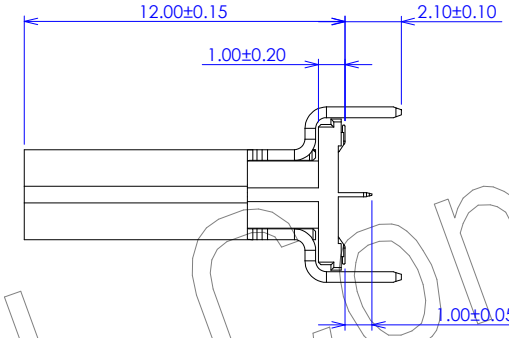

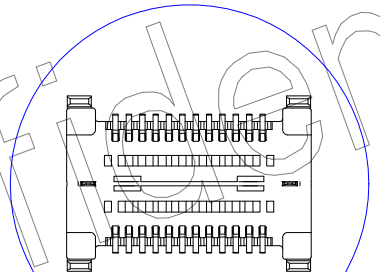

TABLE A : PRODUCT NUMBERING CODE

NDS21 - A k 5 V 2 1
① ② ③ ④ ⑤ ⑥

① CONNECTOR TYPE :
NDS21 : USB TYPE C (TBT3) VERTIACL CONN.
② NO. OF POSITION :
A : 24 POSITIONS.
③ COLOR OF INSULATOR :
K : BLACK
④ PLATING OF CONTACT :
5 : Au 30u" PLATING ON CONTACT AREA.
⑤ PLATING OF SHELL :
V : SOLDERING NICKEL 50~120u"
⑥ OTHER :
1 : 鐵殼腳長2.10mm

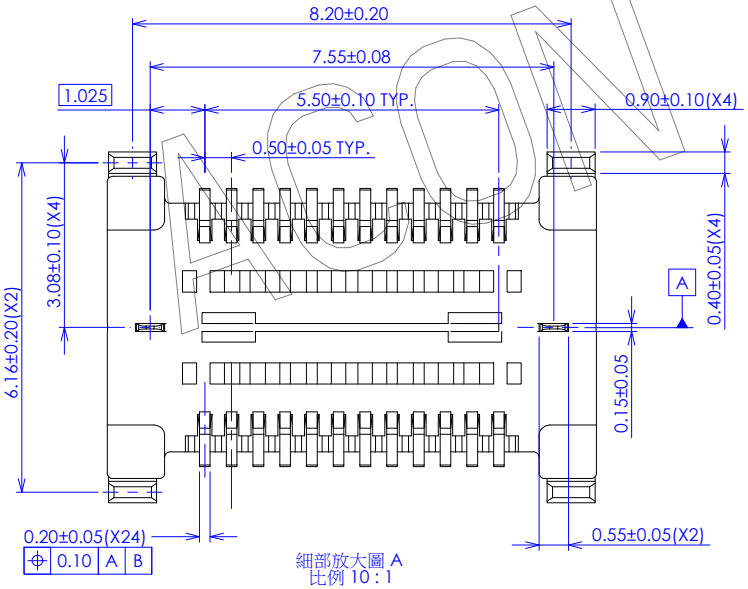

細部放大圖 A
比例 10 : 1

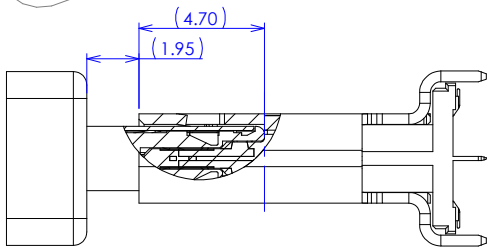

MATED CONDITION(REF.)

設計驗證
工程課
2025 -04- 25
發行
鈺緯科技開發股份有限公司

3FU02402010(F0318)

ITEM	NAME	Q'TY	PART#	MATERIAL / FINISH
5	CAP	1		HI-TEMP,G.F/UL94V-0
4	SHELL	1		METAL/NI PLARED
3	GNDPLATE	1		METAL/NI PLARED
2	HALF PRODUCT	1		HI-TEMP,G.F/UL94V-0
1	CONTACT	24		COPPER ALLOY/Au PLATED

R&D Dept./Conn. Div.

Preliminary

- Confidential; ACON's Intellectual Property;
No further disclosure to other parties
- Subject to change without notice

TOLERANCES UNLESS OTHERWISE SPECIFIED
GENERAL X. ±0.38, .X ±0.25, .XX ±0.13, .XXX ±0.05
ANGLES X.° ±3.0°, .X° ±2.0°, .XX° ±1.0°

DRAWN DATE: David.Huang 2020/5/28
DESIGN DATE: David.Huang 2020/5/28
CHECKED DATE:
APPROVED DATE:
SCALE 5:1
SHEET 1 OF 3
UNIT mm

CUSTOMER DRAWING

ADVANCED-CONNECTEK INC.

TITLE: USB TBT3 TYPE C CONN. VERTIACL TYPE
SERIES NDS21
SIZE A3
DWG NO. C-NDS21-00-01
REV. 0

This document and information contained herein are the property of Advanced Connectek Inc., copies are issued in strict confidence and shall not be reproduced or copied, or used as the basic of manufacture or sale of apparatus without permission

All materials meet the ACON's spec. environment-related substances management technical standard

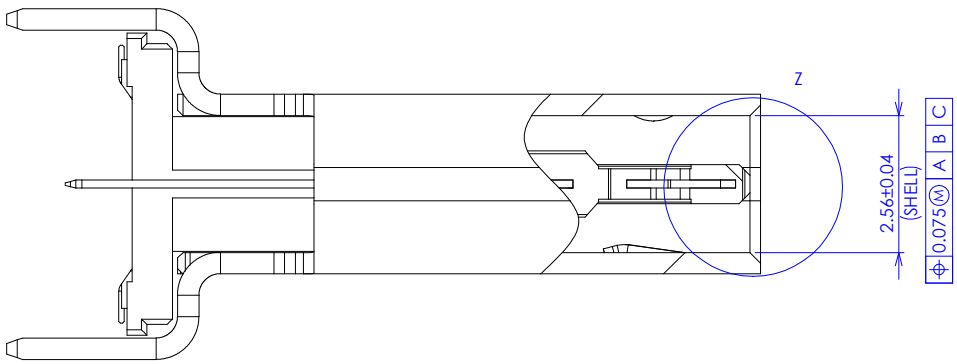

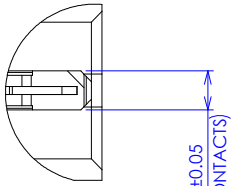

細部放大圖 Z
比例 10 : 1

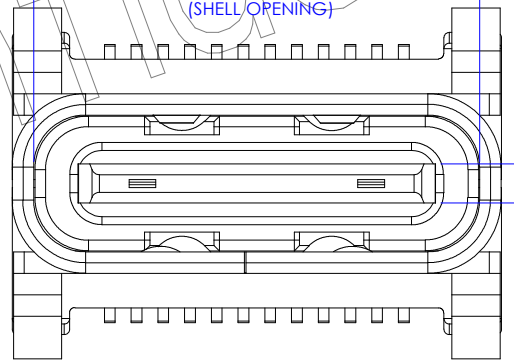

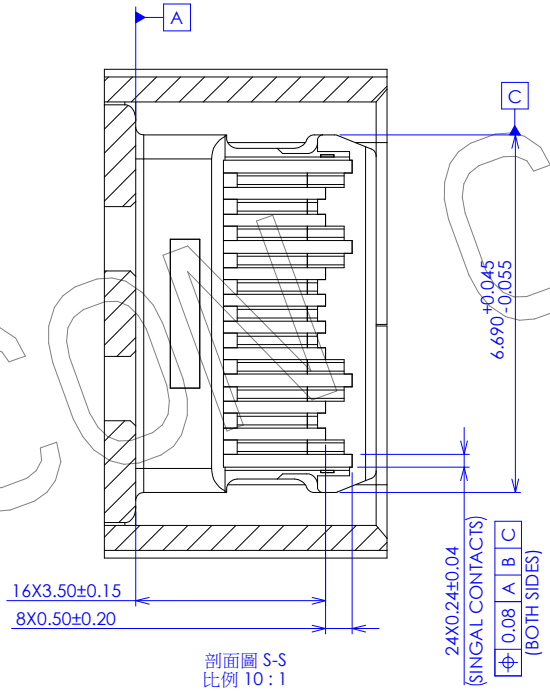

剖面圖 S-S
比例 10 : 1

設計驗證
工程課
2025 -04- 25
發行
鈺緯科技開發股份有限公司

R&D Dept./Conn. Div.

Preliminary

- Confidential; ACON's Intellectual Property;
No further disclosure to other parties
- Subject to change without notice

TOLERANCES UNLESS OTHERWISE SPECIFIED GENERAL X. ±0.38 .X ±0.25 .XX ±0.13 .XXX ±0.05 ANGLES X.° ±3.0° .X° ±2.0° .XX° ±1.0°	DRAWN DATE David.Huang 2020/5/28	ACON ADVANCED-CONNECTEK INC.	
	DESIGN DATE David.Huang 2020/5/28		
	CHECKED DATE	TITLE USB TBT3 TYPE C CONN. VERTIACL TYPE	
SCALE 5:1	APPROVED DATE		
SHEET 2 OF 3			
UNIT mm	CUSTOMER DRAWING	SERIES NDS21	SIZE A3
		DWG NO. C-NDS21-00-01	REV. 0

ACON Confidential

This document and information contained herein are the property of Advanced Connectek Inc.,
copies are issued in strict confidence and shall not be reproduced or copied,
or used as the basic of manufacture or sale of apparatus without permission

All materials meet the ACON's spec. environment-related substances management technical standard

HALOGEN FREE

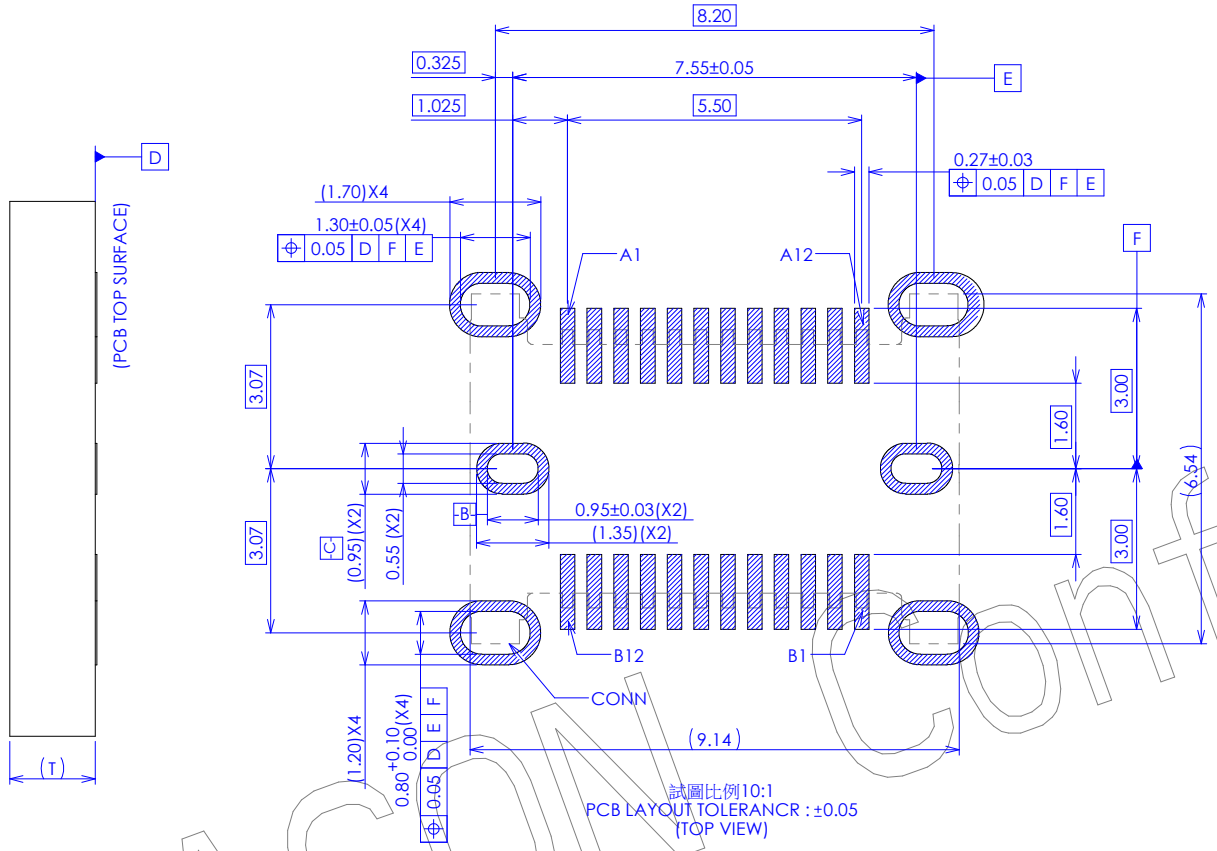

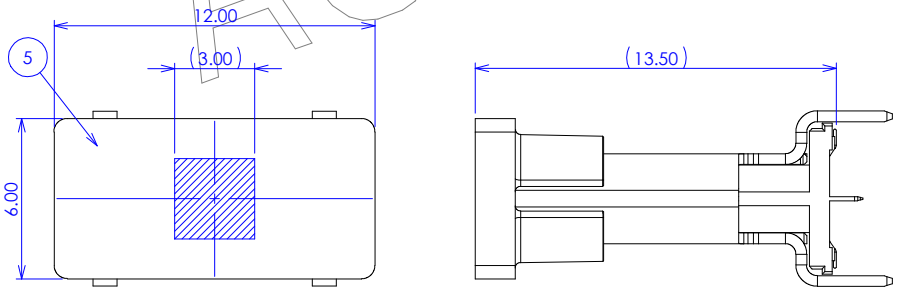

CAP ASSEMBLY CONDITION(REF.)

NOTES :

1.0 ELECTRICAL CHARACTERISTICS :

1.1 LOW LEVEL CONTACT RESISTANCE :
INITIAL: 40mΩ FOR ALL CONTACT MAXIMUM.
AFTER TEST: 50mΩ MAXIMUM

1.2 DIELECTRIC WITHSTANDING VOLTAGE:
100V AC FOR 1 MINUTE SEA LEVEL

1.3 INSULATION RESISTANCE:
100MΩ MINIMUM.

1.4 CURRENT RATING:
A current of 5 A shall be applied collectively to VBUS pins(i.e.,pins A4,A9,B4 ,and B9) and 1.25A shall be applied to the V CONN pin(i.e.,B5)as applicable, terminated throngh the curresponding GND pins(i.e.,A1,A12,B1, and B12). A minimum current of 0.25A shall also be applied individually to all the other contacts as applicable.

2.0 MECHANICAL CHARACTERISTICS:

2.1 INSERTION FORCE: 1~10000 CYCLES 5N~20N

2.2 EXTRACTION FORCE:
INITIAL EXTRACTION FORCE 6TH CYCLES OF 8N ~ 20 N.
(1~5 INSERTION/EXTRACTION PRECONDITIONING CYCLES)
DURABILITY 32TH EXTRACTION FORCE SHALL BE 33% OF THE INITIAL READING AND WITHIN THE RANGE 8 N ~ 20 N.
(6 CYCLES ADDITIONAL 25 INSERTION/EXTRACTION CYCLES)
AFTER DURABILITY 10,000 CYCLES OF 6N ~ 20N

2.3 DURABILITY:10,000 CYCLES.

3.0 OPERATING TEMPERATURE: -55°C TO +85°C

設計驗證
工程課
2025 -04- 25
發行
(連接科技開發股份有限公司)

PIN NO.	A1	A2	A3	A4	A5	A6	A7	A8	A9	A10	A11	A12
SIGNAL NAME	GND	TX1+	TX1-	VBUS	CC1	D+	D-	SBU1	VBUS	RX2-	RX2+	GND
PIN NO	B12	B11	B10	B9	B8	B7	B6	B5	B4	B3	B2	B1
SIGNAL NAME	GND	RX1+	RX1-	VBUS	SBU2	D-	D+	CC2	VBUS	TX2-	TX2+	GND

R&D Dept./Conn. Div.

Preliminary

- Confidential; ACON's Intellectual Property;
No further disclosure to other parties
- Subject to change without notice

TOLERANCES UNLESS OTHERWISE SPECIFIED
GENERAL X. ±0.38, .X ±0.25, .XX ±0.13, .XXX ±0.05
ANGLES X.° ±3.0°, .X° ±2.0°, .XX° ±1.0°

SCALE 5:1
SHEET 3 OF 3
UNIT mm

DRAWN David.Huang DATE 2020/5/28
DESIGN David.Huang DATE 2020/5/28
CHECKED DATE
APPROVED DATE

CUSTOMER DRAWING

ACON ADVANCED-CONNECTEK INC.

TITLE: USB TBT3 TYPE C CONN. VERTIACL TYPE

SERIES NDS21
SIZE A3
DWG NO. C-NDS21-00-01
REV. 0

ACON Confidential

This document and information contained herein are the property of Advanced Connectek Inc., copies are issued in strict confidence and shall not be reproduced or copied, or used as the basic of manufacture or sale of apparatus without permission

All materials meet the ACON's spec. environment-related substances management technical standard

REV.	ECR#	DESCRIPTION	DATE	DRAWN	CHECKED	APPROVED
A	SZECR19126-01	NEW RELEASE PER NPR17055	03/20/20'	Ziv.Li		Roger
A!	SZECR20090	A1 X1,MX1	06/17/20'	Ziv.li		

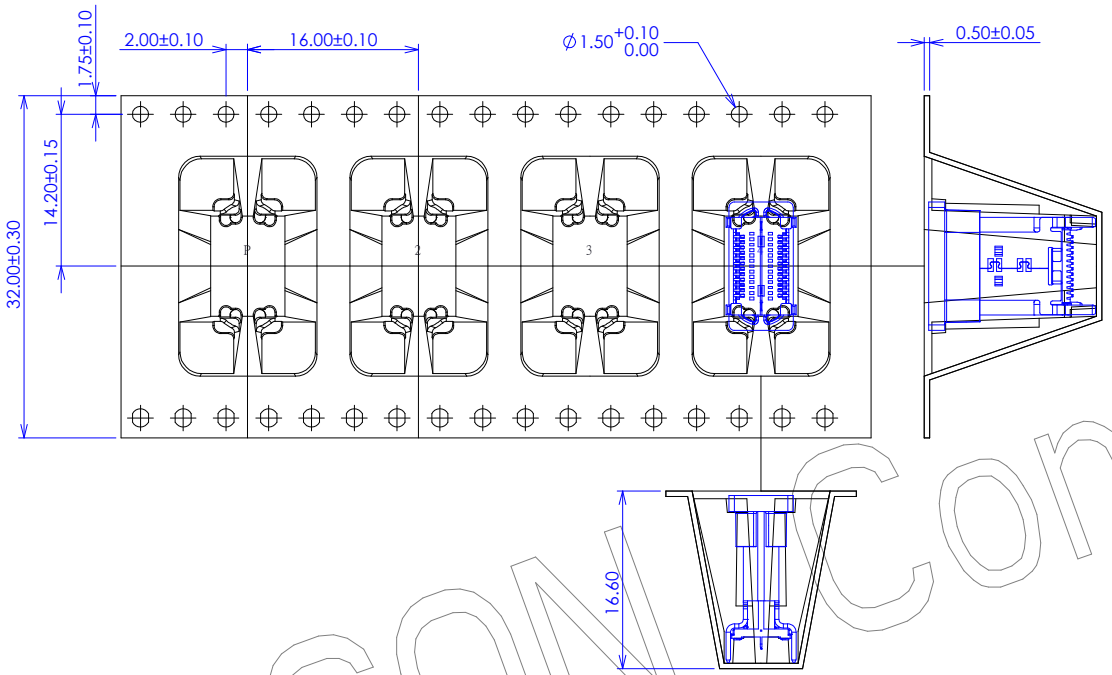

A1 NOTES:
1.USED ON TYPE C RECEP.CONNECTOR PRODUCTS.(NDS21-AKXXXX)
(NBS21-AKXXXX)
(NES21-AKXXXX)
2.PACKAGE:230PCS/REEL,8REELS/BOX
3.MATERIAL:TRANSPARENT CONDUCTIVE POLYSTRENE ALLOY
4.APPLICABLE DOCUNMENTS:EIA-481-C
5.AFTER UNREELING DIRECTION MUST HAVE 9PCS BLANK.(170mm Min)
6.BEFORE UNREELING DIRECTION MUST HAVE 20PCS BLANK.(400mm Min)

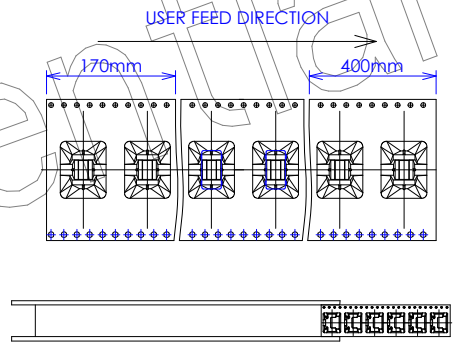

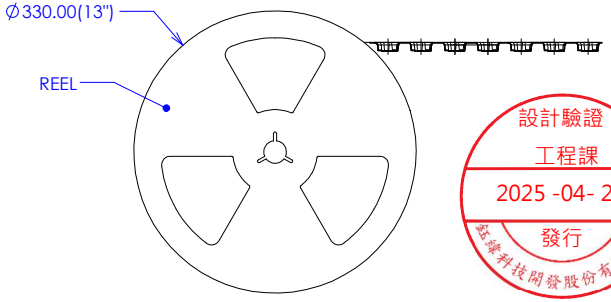

設計驗證
工程課
2025 -04- 25
發行
鈺緯科技開發股份有限公司

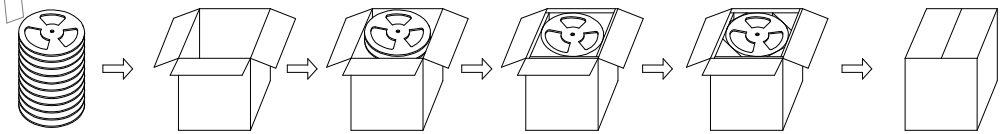

OUT BOX PACKAGE DIAGEAM DRAWING

TOLERANCES UNLESS OTHERWISE SPECIFIED GENERAL X. ±0.38 .X ±0.25 .XX ±0.13 .XXX ±0.05 ANGLES X.° ±3.0° .X° ±2.0° .XX° ±1.0°	DRAWN Ziv.Li	DATE 2017/11/15	ACON ADVANCED-CONNECTEK INC.
	DESIGN Ziv.Li	DATE 2017/11/15	
	CHECKED Alan Tsia	DATE 2017/11/15	TITLE USB TYPE - C FULL FEATURE CONN. VERTICAL TYPE TAPE & REEL PACKAGE
SCALE 2:1	APPROVED Roger	DATE 2017/11/15	
SHEET 1 OF 1			
UNIT mm	CUSTOMER DRAWING		SERIES NDS21 SERIES — SIZE A3
			DWG NO. CP-NDS21-00-01 — REV. A1

ACON Confidential

This document and information contained herein are the property of Advanced Connectek Inc., copies are issued in strict confidence and shall not be reproduced or copied, or used as the basic of manufacture or sale of apparatus without permission

All materials meet the ACON's spec. environment-related substances management technical standard

USB Type C
Series Connector
Product Specification
(For External Use)

Rev.	ECR#	Description	Written/Date	Checked/Date	Approved/Date
A	KSECR15146-02	NEW RELEASE PER NPR14045	LEE 2016/02/29	MIKE 2016/03/15	ROGER 2016/03/16
B	KSECR15227-04	△B X4, MX4	MORE 2016/07/07	MIKE 2016/07/07	ROGER 2016/07/07
C	KSECR17126	△C X2,MX2	DEPENG 2017/05/17	MICK 2017/6/27	ROGER 2017/07/03
D	SZECR17093-01	△D X16,AX5,MX8,DX3	YUBIN.LI 2017/08/12	~	ROGER 2017/09/29
E	SZECR18015-01	△E X16,AX5,MX8,DX3	LINGTAI.LIU 2018/01/28	~	ROGER 2018/01/30
F	SZECR18116-01	△F X1,MX1	Ziv.Li 2019/10/29	~	

This document and information contained herein are the property of Advanced Connectek Inc.,
copies are issued in strict confidence and shall not be reproduced or copied,
or used as the basic of manufacture or sale of apparatus without permission

1.0 Scope : This specification covers the requirements for product performance and test methods of ACON's USB Type-C series connectors of the part numbers specified as bellow.
Product shall be of the design, construction and physical dimensions specified in the applicable product drawing.

2.0 Rating :

2.1 Voltage Rating : 50 Vac (rms)

2.2 Temperature Range:

storage : -20℃ to +60℃;

operating : -55℃ to +85℃ B

nominal : +20℃

3.0 Test Condition:

All tests shall be performed as bellow conditions unless otherwise specified.

3.1 Temperature range : +15℃ to +35℃

3.2 Humidity range: 25% to 85%

3.3 Atmospheric Pressure : 86kPa to 106 kPa (860 to 1060 mber)

4.0 Test Methods and Requirements:

4.1 Examination of product:

Item	Test Description	Test Methods	Requirement
4.1.1	Examination of product (Outward Appearance Structure)	**EIA 364-18** Shall be confirmed with eyes in accordance with each drawing. Shall be confirmed by using proper measuring instruments.	1).Outward appearance shall be good without such injurious problem 2).Structure shall be meet the design and dimensional requirements of drawing.
4.1.2	Plating thickness	See product 2D for details.	Use of X-ray to determine thickness of contacts.

This document and information contained herein are the property of Advanced Connectek Inc.,
copies are issued in strict confidence and shall not be reproduced or copied,
or used as the basic of manufacture or sale of apparatus without permission

4.2 Electrical Performance:

Item	Test Description	Test Methods	Requirement
4.2.1	Low Level Contact Resistance	**EIA 364-23B** Subject mated contacts assembled in housing to 20mV maximum open circuit at 100 mA maximum The object of this test is to detail a standard method to measure the electrical resistance across a pair of mated contacts such that the insulating films, if present, wll not be broken or asperity melting will not occur.	The folliwing requirement apply to the power and signal contacts 1). Initial: 40mΩ Maximum for VBUS, GND and all other contacts. 2). After test: 50 mΩ Maximum
4.2.2	Insulation Resistance	**EIA 364-21** Test between adjacent contacts of mated and unmated connector. This test procedure is used to determine the resistance offered by insulation connector to 500V DC potential current through or on the suface of the members.	1). 100 MΩ Minimum
4.2.3	Dielectric Strength	**EIA 364-20** Test between adjacent contacts of mated and unmated connector assemblies. 100 V AC for one minute at sea level	1).No flashover or insulation breakdown 2).Leakage current: 0.5mA Maximum.

This document and information contained herein are the property of Advanced Connectek Inc.,
copies are issued in strict confidence and shall not be reproduced or copied,
or used as the basic of manufacture or sale of apparatus without permission

4.2 Electrical Performance: (Continued)

Item	Test Description	Test Methods	Requirement
4.2.4	Contact Current Rating	**EIA 364-70 Method 2** When measured at an ambient temperature of 25℃. When the currents are applied to the contacts the temperature rise shall not exceed +ρ30℃ at any point on the USB Type C mated plug and receptacle under test	A current of 5 A shall be applied collectively to VBUS pins (i.e., pins A4, A9, B4, and B9) and 1.25 A shall be applied to the VCONN pin (i.e., B5) as applicable, terminated through the corresponding GND pins (i.e., pins A1, A12, B1, and B12). △D 0.25A for other contacts

4.3 Mechanical Performance:

Item	Test Description	Test Methods	Requirement
4.3.1	Random Vibration	**EIA 364-28 Test Condition VII Test Letter D**, Subject mated connectors to 3.10 G's rms. Fifteen minutes in each of three mutually perpendicular planes.	1).No discontinuities of 1 μ sec or longer duration 2).Shall meet visual requirement, show no physical damage.
4.3.2	Physical Shock	Subject mated connectors to 30G's half-sine shock pulses of 11ms duration. Three shocks in each direction applied along three mutually perpendicular planes, 18 total shock.	1).No discontinuities of 1 μ sec or longer duration 2).Shall meet visual requirement, show no physical damage.
4.3.3	Insertion Force (NAS10 N/A)△B Del NAS10 N/A △D	**EIA 364-13** Measure force necessary to unmate assemblies at maximum rate of 12.5mm per minute.	Range: 1 ~ 10,000 Cycles 5N~20N

This document and information contained herein are the property of Advanced Connectek Inc.,
copies are issued in strict confidence and shall not be reproduced or copied,
or used as the basic of manufacture or sale of apparatus without permission

4.3.4	Extraction Force (NAS10 N/A) B Del NAS10 N/A D	**EIA 364-13** Measure force necessary to unmate assemblies at maximum rate of 12.5mm per minute.	1).Initial 6th cycles of 8~20N (1~5 Insertion/Extraction preconditioning cycles) D 2).Durability 32th extraction force shall be 33% of the initial reading and within range 8~20N (6cycles additional 25 insertion/ extraction cycles) 3). After durability 10000 cycles of 6~20N
4.3.5	Durability	**EIA 364-09** Automatic equipment: 500± 50 cycles.	1). Shall meet visual requirement, show no physical damage. 2). 10,000 Cycle
4.3.6	Contact Retension Force	**EIA364-35** Shell be measured with TENSION GAUGE or TENSION TESTER in same direction.	1).5 Newtons minimum per terminal.

This document and information contained herein are the property of Advanced Connectek Inc.,
copies are issued in strict confidence and shall not be reproduced or copied,
or used as the basic of manufacture or sale of apparatus without permission

4.4 Environmental Performance:

Item	Test Description	Test Methods	Requirement
4.4.1	Thermal Shock	**EIA 364-32, Test Condition I,** Subject mated connectors to 10 cycles between –55℃ to +85℃. The object of this test is to determine the resistance of a USB Type-C connector to exposure at extremes of high and low temperatures and to the shock of alternate exposures to these extremes, simulating the worst case conditions for storage, transportation and application.	1). Shall meet visual requirement, show no physical damage. 2). Shall meet requirements of additional tests as specified in TEST SEQUENCE in Section 5.
4.4.2	Cyclic Humidity	**EIA 364-31** Cycle the connector or socket between 25 ℃ ± 3 ℃ at 80 % ± 3% RH and 65 ° C ± 3 ℃ at 50 % ± 3% RH. Ramp times should be 0.5 hour and dwell times should be 1.0 hour. Dwell times start when the temperature and humidity have stabilized within the specified levels. Perform 24 such cycles. The object of this test procedure is to detail a standard test method for the evaluation of the designs and materials used in USB Type-C connectors as the effects of high humidity and heat influences them.	1). Shall meet visual requirement, show no physical damage. 2). Shall meet requirements of additional tests as specified in TEST SEQUENCE in Section 5.
4.4.3	Salt Spray △D	**EIA 364-26** a)Subject mated connectors to 48 hours at 35℃±2℃ with 5%-Salt-solution concentration (for solderable Ni) b)Subject mated connectors to 8 hours at 35℃±2℃ with 5%-Salt-solution concentration (for black Ni)	1).Shall meet visual requirement, show no physical damage. 2).Shall meet requirements of additional tests as specified in TEST SEQUENCE in Section 5

This document and information contained herein are the property of Advanced Connectek Inc., copies are issued in strict confidence and shall not be reproduced or copied, or used as the basic of manufacture or sale of apparatus without permission

4.4 Environmental Performance:			
4.4.4	Temperature Life	**EIA 364-17 Test Condition 4 Method A,** 105º C without applied voltage for 120 hours. 105º C without applied voltage for 72 hours when used as preconditioning in EIA 364-1000.01. Test shall be done in sequences defined in EIA 364-1000.01	1).Shall meet visual requirement, show no physical damage. 2).Shall meet requirements of additional tests as specified in TEST SEQUENCE in Section 5 3). Preconditioning: 105℃ for 72 hours
4.4.5	Solderability	**EIA 364-52** After one hour steam aging. The object of this test procedure is to detail a uniform test method for determining USB Type-C connector solderability. The test procedure contained herein utilizes the solder dip technique. It is not intended to test or evaluate solder cup, solder eyelet, other hand-soldered type or SMT type terminations.	1). Solder shall cover a minimum of 95% of the surface being immersed. 2). when soldered at temperature 255 +/-5 for in immersion duration 5s.
4.4.6	Thermal Cycling	Cycle Count: 500 Cycles Temperature High:+85 ± 3 , uncontrolled humidity Temperature Low: +15 ± 3 , uncontrolled humidity Ramp Rate: 2 /min Dwell Time: 5 minutes at High and Low temperatures	1). Shall meet visual requirement, show no physical damage. 2). Shall meet requirements of additional tests as specified in TEST SEQUENCE in Section 5

This document and information contained herein are the property of Advanced Connectek Inc.,
copies are issued in strict confidence and shall not be reproduced or copied,
or used as the basic of manufacture or sale of apparatus without permission

Procedure Chart

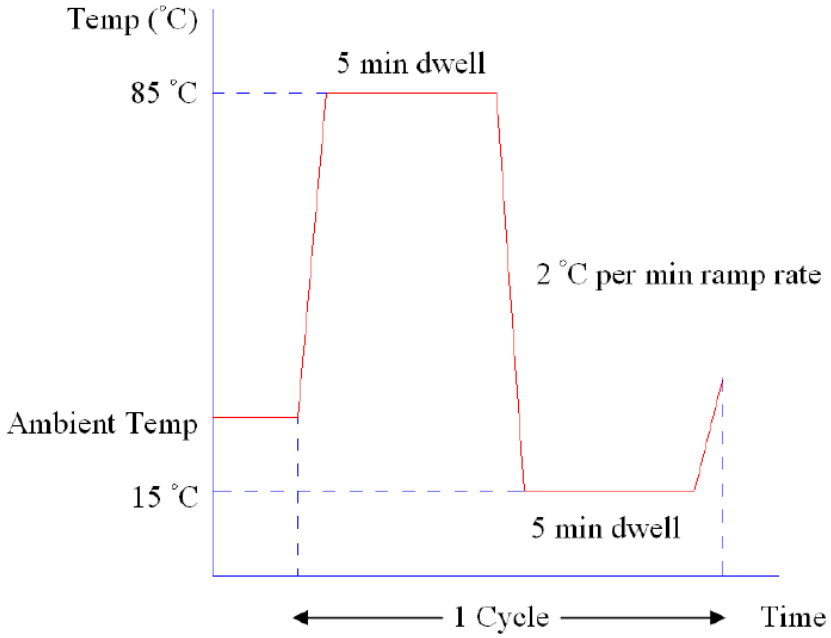

This document and information contained herein are the property of Advanced Connectek Inc.,
copies are issued in strict confidence and shall not be reproduced or copied,
or used as the basic of manufacture or sale of apparatus without permission

4.4 Environmental Performance: (Continued)

Item	Test Description	Test Methods	Requirement
4.4.7	Resistance to Soldering Heat	1) for WAVE SOLDERING : MIL-STD-202F, Method 210A, Test Condition B. Pre-heat: 80℃, 60 sec Temperature: 260 ± 5 ℃ Immersion duration : 10 ± 1 sec.	1). No mechanical defect on housing or other parts.
		2) for MANUAL SOLDERING : MIL-STD-202F, Method 210A, Test Condition A. Pre-heat: No Temperature: 350 ± 10 ℃ Immersion duration: 3.5 ± 0.5 sec.	
		3) for REFLOW SOLDERING : EIAJ RCX-0101/102. Pre-heat: 150 ± 10 ℃, 60 ~120 sec Temperature: 255 ± 5 ℃ Immersion duration: 30 ± 1 sec.	

Recommended infrared reflow condition.

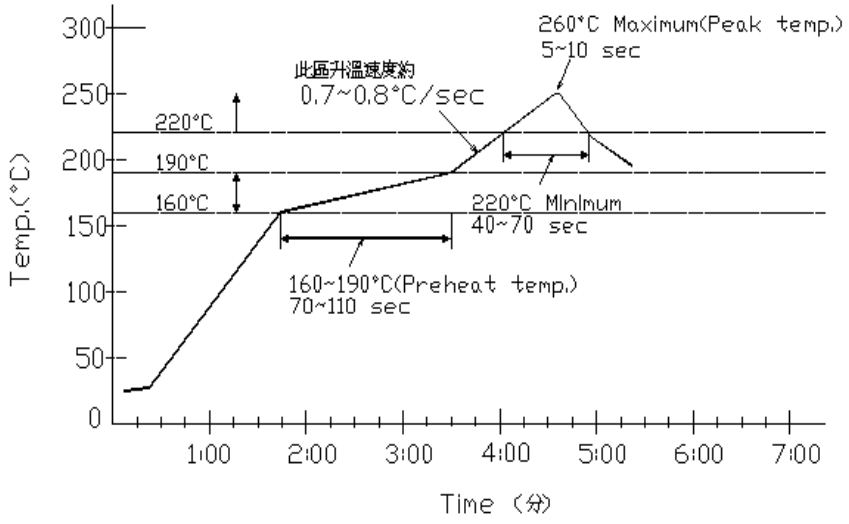

This document and information contained herein are the property of Advanced Connectek Inc.,
copies are issued in strict confidence and shall not be reproduced or copied,
or used as the basic of manufacture or sale of apparatus without permission

4.4.8	Waterproof test (waterproof type only)	IEC/EN 60529 1).Level:IPX4 Specification Test duration:5 minutes Water volume:1 liters per minute Pressure:80~100KN/m² (For IPX4 waterproof type) 2).Level:IPX7 Measuring depth:horizontal distance analyte top 1M deep Test time:30minutes (For IPX7 waterproof type)	1).Shall meet requirements of additional tests as specified in TEST SEQUENCE in Section 5 2).Water falling as a spray at any angle shall have no harmful effect. D

This document and information contained herein are the property of Advanced Connectek Inc.,
copies are issued in strict confidence and shall not be reproduced or copied,
or used as the basic of manufacture or sale of apparatus without permission

5.0 Test Sequence/D

Test Group (a)		Sample Groups													
Item	Test Description	A	B	C	D	E	F	G	H	I	J	K	L	N	O
4.1.1	Examination of product	1,12	1,15	1,8	1,12	1,13	1,3	1,3	1,6	1,3	1,5	1,3	1,3	1,15	1,3
4.1.2	Plating thickness												2		
4.2.1	Low Level Contact Resistance	2,7, 11	2,7,12	2,5,7	2,7,9	2,8			2,5		2,4			2,10	
4.2.2	Insulation Resistance		3,8,13		3,10	3,9								3,11	
4.2.3	Dielectric Strength		4,9,14		4,11	4,10								4,12	
4.2.4	Contact Current Rating							2							
4.3.1	Random Vibration			6					4					8	
4.3.2	Physical Shock								3						
4.3.3	Insertion Force	3,8				5,11								5,13	
4.3.4	Extraction Force	4,9				6,12								6,14	
4.3.5	Durability					7								7	
	Durability (see Note c)	5	5	3	5										
	Durability (see Note d)	10	11												
4.3.6	Contact Retension Force									2					
4.4.1	Thermal Shock		6												
4.4.2	Cyclic Humidity		10												
4.4.3	Salt Spray										3				
4.4.4	Temperature Life	6													
	Temperature Life(Preconditioning)			4	6										
4.4.5	Solderability						2								
4.4.6	Thermal Cycling				8										
4.4.7	Resistance to Soldering Heat											2			
4.4.8	Waterproof test														2
Number of Test Samples (Minimum)		5	5	5	5	5	5	5	5	5	5	5	5	5	5

This document and information contained herein are the property of Advanced Connectek Inc.,
copies are issued in strict confidence and shall not be reproduced or copied,
or used as the basic of manufacture or sale of apparatus without permission

Note:

a. Samples shall be prepare in accordance with applicable manufacture's instructions and shall be selected at random from current production.
b. The numbers in the table indicate sequence in which tests are performed.
c. Precondition samples with 5 cycles durability. (Durability Preconditioning)
d. Manually mating / unmating the connector 3 such cycle.(Reseating)
e. All the tests shall be performed in the sequence, indicated by the number in the columns.

Note:

f. Samples shall be prepare in accordance with applicable manufacture's instructions and shall be selected at random from current production.
g. The numbers in the table indicate sequence in which tests are performed.
h. Precondition samples with 50 cycles durability.
i. Manually unplug/plug the connector or socket. Perform 3 such cycle.
j. All the tests shall be performed in the sequence, indicated by the number in the columns.
k. Each test groups shall consist of minimum of eight connectors. A minimum of 30 contacts shall be selected and identified. Unless otherwise specified, these contacts shall be used for all measurements.

6.0 Applicable Part Number & Product Drawing: △B △C △D △E △F

Part Number	Description	Drawing Number	Remark
NAW1X-XXXXXX	USB Type C Plug for USB 2.0 type	C-NAW1X-XX-XX	
NAW3X-XXXXXX	USB Type C Plug for USB 2.0 type	C-NAW3X-XX-XX	
NAW5X-XXXXXX	USB Type C Plug for USB 2.0 type	C-NAW5X-XX-XX	
NAS1X-XXXXXX	USB Type C Plug for USB 2.0 type	C-NAS1X-XX-XX	
NAR2X-XXXXXX	USB Type C Receptacle Receptacle USB 2.0 type	C-NAR2X-XX-XX	
NARAX-XXXXXX	USB Type C Receptacle Receptacle USB 2.0 type	C-NARAX-XX-XX	
NAP2X-XXXXXX	USB Type C Receptacle Connector for USB 2.0 waterproof type	C-NAP2X-XX-XX	
NBW3X-XXXXXX	USB Type C Plug for USB 3.1 type	C-NBW3X-XX-XX	
NBW5X-XXXXXX	USB Type C Plug for USB 3.1 type	C-NBW5X-XX-XX	
NBR2X-AXXXXX	USB Type C Receptacle Connector for USB 3.1 type	C-NBR2X-XX-XX	
NBR4X-AXXXXX	USB Type C Receptacle Connector for USB 3.1 type	C-NBR4X-XX-XX	
NBP2X-XXXXXX	USB Type C Receptacle Connector for USB 3.1	C-NBP2X-XX-XX	

This document and information contained herein are the property of Advanced Connectek Inc.,
copies are issued in strict confidence and shall not be reproduced or copied,
or used as the basic of manufacture or sale of apparatus without permission

	waterproof type		
NBS2X-AXXXXX	USB Type C Vertical Connector forUSB 3.1 type	C-NBS2X-XX-XX	
NDW3X-AXXXXX	USB Type C Plug for USB TBT3	C-NDW3X-XX-XX	
NDR2X-AXXXXX	USB Type C Receptacle Connector for TBT3	C-NDR2X-XX-XX	
NDS2X-AXXXXX	USB Type C Vertical Connector for TBT3	C-NDS2X-XX-XX	
NCR2X-AXXXXX	USB Type C Receptacle Connector for USB 3.0 type	C-NCR2X-XX-XX	
NCP2X-AXXXXX	USB Type C Receptacle Connector for USB 3.0 type waterproof type	C-NCP2X-XX-XX	

This document and information contained herein are the property of Advanced Connectek Inc.,
copies are issued in strict confidence and shall not be reproduced or copied,
or used as the basic of manufacture or sale of apparatus without permission

ACON ADVANCED CONNECTEK INC.

QUALIFICATION TEST REPORT

USB TYPE-C FULL FEATURE CONN

VERTIACL TYPE

SERIES：NDS21 SERIES

QAT-190013-A

TESTED BY : Ling Zi Wang

APPROVED BY: Biao Biao Peng

TABLE OF CONTENTS

Section	Description	Page
1.	Cover Page	1
2.	Table of Contents	2
3.	Test Sequence	3
4.	Test Summary	4
5.	Qualification Test	12
5.1	Examination of product	13
5.2.	LowLevelContactResistance	13
5.3	Insulation Resistance	14
5.4.	DielectricWithstandingVoltage	15
5.5.	Random Vibration	15
5.6.	Physical Shock	16
5.7.	Insertion Force	16
5.8.	Extraction Force	17
5.9.	Durability	17
5.10.	Thermal Shock	18
5.11.	Cyclic Humidity	19
5.12.	Salt Spray	19
5.13.	Temperature life	20
5.14.	Solder ability	20
5.15.	Thermal Cycling	20
5.16.	Resistanceto Solderability Heat	21

TEST SEQUENCE IDENTIFICATION

PART NAME：NDS21　　Type C

PART NUMBER：NDS21

TITLE OF TEST	Group A	Group B	Group C	Group D	Group E	Group F	Group H	Group J	Group K	Group N
Examination of product	1,12	1,15	1,8	1,12	1,13	1,3	1,6	1,5	1,3	1,15
Low Level Contact Resistance	2,7,11	2,7,12	2,5,7	2,7,9	2,8		2,5	2,4		2,10
Insulation Resistance		3,8,13		3,10	3,9					3,11
Dielectric Withstanding Voltage		4,9,14		4,11	4，10					4,12
Random Vibration			6				4			8
Physical Shock							3			9
Insertion Force	3,8				5,11					5，13
Extraction Force	4,9				6,12					6，14
Durability					7					7
Durability (see Note c)	5	5	3	5						
Durability (see Note d)	10	11								
Thermal Shock		6								
Cyclic Humidity		10								
Salt Spray								3		
Temperature life	6									
Temperature life (Preconditioning)			4	6						
Solder ability						2				
Thermal Cycling				8						
Resistance to Solderability Heat									2	

Note:

a.Samples shall be prepare in accordance with applicable manufacture’s instructions and shall be selected at random from current production.

b.The numbers in the table indicate sequence in which tests are performed.

c.Precondition samples with 5 cycles durability. (Durability Preconditioning)

d.Manually mating / unmating the connector 3 such cycle.(Reseating)

All the tests shall be performed in the sequence, indicated by the number in the columns.

TEST SUMMARY

TEST	SPECIFICATION REQUIRMENT	TEST RESULTS	REMARK

GROUP A-1 Examination of product	1).Outward appearance shall be good without such injurious problem 2).Structure shall be meet the design and dimensional requirements of drawing.	Appearance is good and no physical damage	OK
GROUP A-2 LLCR	Initial: 40mΩ Max	21.24~23.75mΩ	OK
GROUP A-3 Insertion Force	Insertion Force:5~20 N	9.4~11.1N	OK
GROUP A-4 Extraction Force	Initial 6th cycles of 8~20N (1~5 Insertion/Extraction preconditioning cycles)	17.6~18.4N	OK
GROUP A-5 Durability	Precondition samples with 5 cycles durability .	meet visual requirement and no physical damage.The functional and electrical requirements fulfilled	OK
GROUP A-6 Temperature life	105℃ without applied voltage for 120 hours.	Appearance is good and no physical damage Structure meet	OK
GROUP A-7 LLCR	After test: 50 mΩ Maximum	21.25~23.75mΩ	OK
GROUP A-8 Insertion Force	Insertion Force:5~20 N	8.6~12.1N	OK

GROUP A-9 Extraction Force	Durability 32th extraction force shall be 33% of the initial reading and within range 8~20N(6cycles additional 25 insertion/extraction cycles)	16.4~18.6N	OK
GROUP A-10 Durability	Manually mating&unmating the connector 3 such cycle .	meet visual requirement and no physical damage.The functional and electrical requirements fulfilled	OK
GROUP A-11 LLCR	After test: 50 mΩ Maximum	21.31~23.72mΩ	OK
GROUP A-12 Examination of product	1).Outward appearance shall be good without such injurious problem 2).Structure shall be meet the design and dimensional requirements of drawing.	Appearance is good and no physical damage	OK
GROUP B-1 Examination of product	1).Outward appearance shall be good without such injurious problem 2).Structure shall be meet the design and dimensional requirements of drawing.	Appearance is good and no physical damage	OK
GROUP B-2 LLCR	Initial: 40mΩ Max	21.25~23.72mΩ	OK
GROUP B-3 Insulation Resistance	Initial:100MΩ Min	>100MΩ	OK
GROUP B-4 Dielectric Withstanding Voltage	100VAC for 1 minute at sea level ,Leakage current :0.5mA Max.	No flashover or insulation breakdown	OK
GROUP B-5 Durability	Precondition samples with 5 cycles durability .	meet visual requirement and no physical damage.The functional and electrical requirements fulfilled	OK
GROUP B-6 Thermal Shock	Subject mated connectors to 10 cycles between –55℃ to +85℃. USB Type-C connector to exposure at extremes of high and low temperatures and to the shock of alternate exposures to these extremes, simulating the worst case conditions for storage, transportation and application.	meet visual requirement and no physical damage.	OK

GROUP B-7 LLCR	After test: 50 mΩ Maximum	21.24~23.73mΩ	OK
GROUP B-8 Insulation Resistance	After test: 100MΩ Min	>100MΩ	OK
GROUP B-9 Dielectric Withstanding Voltage	100VAC for 1 minute at sea level ,Leakage current :0.5mA Max.	No flashover or insulation breakdown	OK
GROUP B-10 Cyclic Humidity	Cycle the connector or socket between 25 °C ± 3 °C at 80 % ± 3% RH and 65 °C ± 3 °C at 50 % ± 3% RH. Ramp times should be 0.5 hour and dwell times should be 1.0 hour. Dwell times start when the temperature and humidity have stabilized within the specified levels. Perform 24 such cycles. The object of this test procedure is to detail a standard test method for the evaluation of the designs and materials used in USB Type-C connectors as the effects of high humidity and heat influences them.	meet visual requirement and no physical damage.	OK
GROUP B-11 Durability	Manually mating&unmating the connector 3 such cycle	meet visual requirement and no physical damage.The functional and electrical requirements fulfilled	OK
GROUP B-12 LLCR	After test: 50 mΩ Maximum	21.25~23.75mΩ	OK
GROUP B-13 Insulation Resistance	After test: 100MΩ Min	>100mΩ	OK
GROUP B-14 Dielectric Withstanding Voltage	100VAC for 1 minute at sea level ,Leakage current :0.5mA Max.	No flashover or insulation breakdown	OK
GROUP B-15 Examination of product	1).Outward appearance shall be good without such injurious problem 2).Structure shall be meet the design and dimensional requirements of drawing.	Appearance is good and no physical damage	OK

GROUP C-1 Examination of product	1).Outward appearance shall be good without such injurious problem 2).Structure shall be meet the design and dimensional requirements of drawing.	Appearance is good and no physical damage	OK
GROUP C-2 LLCR	Initial: 40mΩ Max	21.31~23.71mΩ	OK
GROUP C-3 Durability	Precondition samples with 5 cycles durability .	meet visual requirement and no physical damage.The functional and electrical requirements fulfilled	OK
GROUP C-4 Temperature Life	Preconditioning: 105℃ for 72 hours .	meet visual requirement and no physical damage.	OK
GROUP C-5 LLCR	After test: 50 mΩ Maximum	21.24~23.74mΩ	OK
GROUP C-6 Random Vibration	Subject mated connectors to 3.10 G's rms. Fifteen minutes in each of three mutually perpendicular planes.	1).No discontinuities of 1 μsec or longer duration 2).meet visual requirement and no physical damage.	OK
GROUP C-7 LLCR	After test: 50 mΩ Max	21.26~23.71mΩ	OK
GROUP C-8 Examination of product	1).Outward appearance shall be good without such injurious problem 2).Structure shall be meet the design and dimensional requirements of drawing.	Appearance is good and no physical damage	OK
GROUP D-1 Examination of product	1).Outward appearance shall be good without such injurious problem 2).Structure shall be meet the design and dimensional requirements of drawing.	Appearance is good and no physical damage	OK
GROUP D-2 LLCR	Initial: 40mΩ Max	21.24~23.74mΩ	OK
GROUP D-3 Insulation Resistance	Initial:100MΩ Min	>100MΩ	OK
GROUP D-4 Dielectric Withstanding Voltage	100VAC for 1 minute at sea level ,Leakage current :0.5mA Max.	No flashover or insulation breakdown	OK

GROUP D-5 Durability	Precondition samples with 5 cycles durability	meet visual requirement and no physical damage.The functional and electrical requirements fulfilled	OK
GROUP D-6 Temperature Life	Preconditioning: 105℃ for 72 hours .	meet visual requirement and no physical damage.	OK
GROUP D-7 LLCR	After test: 50 mΩ Max	21.25~23.74mΩ	OK
GROUP D-8 Thermal Cycling	Cycle Count: 500 Cycles Temperature High:+85℃± 3℃, uncontrolled humidity Temperature Low: +15℃± 3℃, uncontrolled humidity Ramp Rate: 2℃/min Dwell Time: 5 minutes at High and Low temperatures	meet visual requirement and no physical damage.	OK
GROUP D-9 LLCR	After test: 50 mΩ Max	21.24~23.74mΩ	OK
GROUP D-10 Insulation Resistance	After test: 100mΩ Min	>100mΩ	OK
GROUPD-11 Dielectric Withstanding Voltage	100VAC for 1 minute at sea level , Leakage current :0.5mA Max.	No flashover and insulation breakdown	OK
GROUP D-12 Examination of product	1).Outward appearance shall be good without such injurious problem 2).Structure shall be meet the design and dimensional requirements of drawing.	Appearance is good and no physical damage	OK
GROUP E-1 Examination of product	1).Outward appearance shall be good without such injurious problem 2).Structure shall be meet the design and dimensional requirements of drawing.	Appearance is good and no physical damage	OK
GROUP E-2 LLCR	Initial: 40mΩ Max	23.80~26.97mΩ	OK

GROUP E-3 Insulation Resistance	Initial:100MΩ Min	<100mΩ	OK
GROUP E-4 Dielectric Withstanding Voltage	100VAC for 1 minute at sea level ,Leakage current :0.5mA Max	No flashover or insulation breakdown	OK
GROUP E-5 Insertion Force	Insertion Force:5~20 N .	8.8~12.0N	
GROUP E-6 Extraction Force	Initial 6th cycles of 8~20N (1~5 Insertion/Extraction preconditioning cycles)	15.8~18.2N	OK
GROUP E-7 Durability	10,000 cycles at maximum rated of 500± 50 cycles per hour.	meet visual requirement and no physical damage.The functional and electrical requirements fulfilled	OK
GROUP E-8 LLCR	After test: 50 mΩ Max	24.23~28.57mΩ	OK
GROUP E-9 Insulation Resistance	After test: 100MΩ Min.	>100MΩ	OK
GROUP E-10 Dielectric Withstanding Voltage	100VAC for 1 minute at sea level , Leakage current :0.5mA Max.	No flashover and insulation breakdown	OK
GROUP E-11 Insertion Force	Insertion Force:5~20 N .	7.8~9.7N	OK

GROUP E-12 Extraction Force	1).Durability 32th extraction force shall be 33% of the initial reading and within range 8~20N(6cycles additional 25 insertion/extraction cycles) 2). After durability 10000 cycles of 6~20N	1).13.6~16.9N 2).6.0~8.1N	OK
GROUP E-13 Examination of product	1).Outward appearance shall be good without such injurious problem 2).Structure shall be meet the design and dimensional requirements of drawing.	Appearance is good and no physical damage	OK
GROUP F-1 Examination of product	1).Outward appearance shall be good without such injurious problem 2).Structure shall be meet the design and dimensional requirements of drawing.	Appearance is good and no physical damage	OK
GROUP F-2 Solder ability	1). Solder shall cover a minimum of 95% of the surface being immersed. 2). when soldered at temperature 255+/-5 for in immersion duration 5s.	Appearance is good and no physical damage	OK

GROUP F-3 Examination of product	1).Outward appearance shall be good without such injurious problem 2).Structure shall be meet the design and dimensional requirements of drawing.	Appearance is good and no physical damage	OK
GROUP H-1 Examination of product	1).Outward appearance shall be good without such injurious problem 2).Structure shall be meet the design and dimensional requirements of drawing.	Appearance is good and no physical damage	OK
GROUP H-2 LLCR	Initial: 40mΩ Max	21.24~23.74mΩ	
GROUP H-3 Physical Shock	Subject mated connectors to 30G's half-sine shock pulses of 2ms duration. Three shocks in each direction applied along three mutually perpendicular planes, 18 total shock.	1).No discontinuities of 1 μsec or longer duration. 2).meet visual requirement and no physical damage.	OK
GROUP H-4 Random Vibration	Subject mated connectors to 3.10 G's rms. Fifteen minutes in each of three mutually perpendicular planes.	1).No discontinuities of 1 μsec or longer duration 2).meet visual requirement and no physical damage.	OK
GROUP H-5 LLCR	After test: 50 mΩ Max	21.24~23.73mΩ	OK
GROUP H-6 Examination of product	1).Outward appearance shall be good without such injurious problem 2).Structure shall be meet the design and dimensional requirements of drawing.	Appearance is good and no physical damage	OK
GROUP J-1 Examination of product	1).Outward appearance shall be good without such injurious problem 2).Structure shall be meet the design and dimensional requirements of drawing.	Appearance is good and no physical damage	OK
GROUP J-2 LLCR	Initial: 40mΩ Max	22.54~24.72mΩ	OK
GROUP J-3 Salt Spray	Subject mated connectors to 48 hours at 35℃± 2℃ with 5%-Salt-solution concentration.	meet visual requirement and no physical damage.	OK

GROUP J-4 LLCR	After test: 50 mΩ Max	22.27~30.81mΩ	OK
GROUP J-5 Examination of product	1).Outward appearance shall be good without such injurious problem 2).Structure shall be meet the design and dimensional requirements of drawing.	Appearance is good and no physical damage	OK
GROUP K-1 Examination of product	1).Outward appearance shall be good without such injurious problem 2).Structure shall be meet the design and dimensional requirements of drawing.	Appearance is good and no physical damage	OK
GROUP K-2 Resistance to Solderability Heat	Pre-heat: 150 ± 10 ℃, 60 ~120 sec Temperature: 255 ± 5 ℃ Immersion duration: 30 ± 1 sec.	No mechanical defect on housing or other parts.	OK
GROUP K-3 Examination of product	1).Outward appearance shall be good without such injurious problem 2).Structure shall be meet the design and dimensional requirements of drawing.	Appearance is good and no physical damage	OK
GROUP N-1 Examination of product	1).Outward appearance shall be good without such injurious problem 2).Structure shall be meet the design and dimensional requirements of drawing.	Appearance is good and no physical damage	OK
GROUP N-2 LLCR	Initial: 40mΩ Max	21.23~23.73mΩ	OK
GROUP N-3 Insulation Resistance	Initial:100MΩ Min.	>100MΩ	OK
GROUP N-4 Dielectric Withstanding Voltage	100VAC for 1 minute at sea level , Leakage current :0.5mA Max.	No flashover and insulation breakdown	OK
GROUP N-5 Insertion Force	Insertion Force:5~20 N .	9.5~11.2N	OK

GROUP N-6 Extraction Force	nitial 6th cycles of 8~20N(1~5 Insertion/Extraction Cpreconditioning cycles)	17.6~19.7N	OK
GROUP N-7 Durability	10,000 cycles at maximum rated of 500± 50 cycles per hour.	meet visual requirement and no physical damage.The functional and electrical requirements fulfilled.	OK
GROUP N-8 Random Vibration	Subject mated connectors to 3.10 G's rms. Fifteen minutes in each of three mutually perpendicular planes.	1).No discontinuities of 1 μ sec or longer duration 2).meet visual requirement and no physical damage.	OK
GROUP N-9 Physical Shock	Subject mated connectors to 30G's half-sine shock pulses of 2ms duration. Three shocks in each direction applied along three mutually perpendicular planes, 18 total shock.	1).No discontinuities of 1 μ sec or longer duration. 2).meet visual requirement and no physical damage.	OK
GROUP N-10 LLCR	After test: 50 mΩ Max	21.26~23.74Ω	OK
GROUP N-11 Insulation Resistance	After test: 100MΩ Min.	>100MΩ	OK
GROUP N-12 Dielectric Withstanding Voltage	100VAC for 1 minute at sea level , Leakage current :0.5mA Max.	No flashover and insulation breakdown	OK
GROUP N-13 Insertion Force	Insertion Force:5~20 N .	7.5~8.4N	OK
GROUP N-14 Extraction Force	1).Durability 32th extraction force shall be 33% of the initial raeding and within range 8~20N (6cycles additional 25 instertion/ extraction cycles) 2). After durability 10000 cycles of 6~20N	1)15.6~18.4N 2)6.3~7.6N	OK

1.TEST: EXAMINATION OF THE CONNECTORS

UNIT: NIL

EQUIPMENT: VISUAL

SPECIFICATION:

1).Outward appearance shall be good without such injurious problem

2).Structure shall be meet the design and dimensional requirements of drawing.

PROCEDURE:

Shall be confirmed with eyes in accordance with each drawing.

Shall be confirmed by using proper measuring instruments.

RESULTS:

All the test samples met the requirements specified by the TYPE C specification.

2.TEST: LOW LEVEL CONTACT RESISTANCE

UNIT: MILLIOHM.

EQUIPMENT: MILLIOHMMETER.

SPECIFICATION:

The folliwing requirement apply to the power and signal contacts

1). Initial: 40mΩ Max

2). After test: 50 mΩ Max

PROCEDURE:

Subject mated contacts assembled in housing to 20mV maximum open circuit at 100 mA maximum

The object of this test is to detail a standard method to measure the electrical resistance across a pair of mated contacts such that the insulating films, if present, wll not be broken or asperity melting will not occur.

RESULTS:

All the test samples meet the standard as specified.The details are as follows:

Group ID.	Item	Maximum	Minimum	Average
A	Initial Contact Resistance : 40 mΩ Max.	23.75	21.24	22.58
	AfterTemperature Life test : 50mΩ Max.	23.75	21.25	22.58
	After Durability(see Note d) test	23.72	21.31	22.48
B	Initial Contact Resistance: 40 mΩ Max.	23.72	21.25	22.56
	AfterThermal Shock test : 50mΩ Max.	23.73	21.24	22.53
	After Cyclic Humidity test : 50mΩ Max.	23.75	21.25	22.59
C	Initial Contact Resistance: 40 mΩ Max.	23.58	21.31	22.59
	AfterTemperature Life(Preconditioning) test: 50mΩ Max.	23.74	21.24	22.53

	After Random Vibration test: 50mΩ Max.	23.71	21.26	22.42
D	Initial Contact Resistance : 40 mΩ Max.	23.74	21.24	22.43
	AfterTemperature Life(Preconditioning) test: 50mΩ Max.	23.74	21.25	22.51
	AfterThermal Cycling test: 50mΩ Max.	23.74	21.24	22.49
E	Initial Contact Resistance : 40 mΩ Max.	26.97	23.80	25.14
	After Durability test : 50mΩ Max.	28.57	24.23	25.83
H	Initial Contact Resistance : 40 mΩ Max.	23.74	21.24	22.39
	After Random Vibration test : 50mΩ Max.	23.73	21.24	22.52
J	Initial Contact Resistance : 40 mΩ Max.	24.72	22.59	23.73
	After Salt Spray test : 50mΩ Max.	30.81	22.27	24.05
N	After Mating&Unmating Force: 40 mΩ Max.	23.78	21.23	22.45
	After Random Vibration test : 50mΩ Max.	23.74	21.26	22.58

3.TEST: INSULATION RESISTANCE

UNIT: MEGAOHM
EQUIPMENT: MEGOHMMETER
SPECIFICATION:

100 MΩ Minimum .After test: 100MΩ Min.

PROCEDURE:

Test between adjacent contacts of mated and unmated connector.

This test procedure is used to determine the resistance offered by insulation connector to 500V DC potential current through or on the suface of the members.

RESULTS:

The insulation resistance of all test samples exceeded 100 MΩ .

4.TEST: Dielectric Withstanding Voltage

UNIT: VOLT.
EQUIPMENT: PUNCTURE/INSULATION TESTER.
SPECIFICATION:

1).No flashover or insulation breakdown

2).Leakage current: 0.5mA Maximum.

PROCEDURE:

Test between adjacent contacts of mated and unmated connector assemblies.

100 V AC for100 V AC for one minute at sea level

RESULTS:

All the test samples can withstand 100 V AC for one minute at sea level.

5.TEST: Random Vibration

UNIT: μS

EQUIPMENT: VIBRATION TESTER

SPECIFICATION:

1).No discontinuities of 1 μsec or longer duration

2).Shall meet visual requirement, show no physical damage.

PROCEDURE:

Subject mated connectors to 3.10 G’ srms. Fifteen minutes in each of three mutually perpendicular planes.

RESULTS:

1).After random vibration test no discontinuities of 1 μsec or longer duration.

2).After random vibration test structure meet the design and dimensional, no physical damage.

6.TEST: Physical Shock

UNIT : μS

EQUIPMENTT : Physical Shock TESTER (Gravity-type Shock Machine S/N.2S0907025C01)

INTERMITTENCE TESTER(TS-713)

SPECIFICATION :

No mechanical damage shall occur on the part. No current interruption greater than 1 microsecond discontinuity. Contact resistance : 50 mΩ Maximum

PROCEDURE :

Subject mated connectors to 30G’ s half-sine shock pulses of 11ms duration. Three shocks in each direction applied along three mutually perpendicular planes, 18 total shock.. The test method complies with EIA-364-27

RESULTS:

No discontinuities of 1 microsecond or longer duration while subjecting the test samples to the specified random vibration. The details are as follows:

Group	SPEC.	Maximum	Minimum	Average
H	Initial : 40 mΩ Max.	23.74	21.24	22.39
	After test : 50mΩ Max.	23.73	21.24	22.52
N	Initial : 40 mΩ Max.	23.78	21.23	22.45
	After test : 50mΩ Max.	23.74	21.26	22.58

7.TEST: Insertion Force

UNIT: N

EQUIPMENT: Mating and unmating force tester

SPECIFICATION:

Rang: 5N to 20N

(Before and after durability)

PROCEDURE:

1).Measure force necessary to unmate assemblies at maximum rate of

12.5mm per minute.

RESULTS:

All the test samples meet the standard as specified.The details are as follows:

Group ID.	Item	Maximum	Minimum	Average
A	Initial test:5-20N	11.10	9.40	10.26
	After Temperature Life test:Mating force :5~20N	12.10	8.60	10.02
E	Initial test:5-20N	12.00	8.80	10.14
	After 32 cycles durability test:5N to 20N	11.90	8.30	9.62
	After 10000 cycles durability test:5N to 20N	9.70	7.80	8.30
N	Initial test:5-20N	11.20	9.50	10.18
	After 32 cycles durability test:5~20N	10.40	8.30	9.00
	After 10000 cycles durability and Vibration&physical shock test:5~20N	8.40	7.50	7.94

8.TEST: Extraction Force

UNIT: N

EQUIPMENT: Mating and unmating force tester

SPECIFICATION:

1).Initial 6th cycles of 8~20N(1~5 Insertion/Extraction Cpreconditioning cycles)

2).Durability 32th extraction force shall be 33% of the initial raeding and within range 8~20N (6cycles additional 25 instertion/ extraction cycles)

3). After durability 10000 cycles of 6~20N

PROCEDURE:

1).Measure force necessary to unmate assemblies at maximum rate of 12.5mm per minute.

RESULTS:

All the test samples meet the standard as specified.The details are as follows:

Group ID.	Item	Maximum	Minimum	Average
A	Initial test:5-20N	18.40	17.60	17.94
	After Temperature Life test:Mating force :5~20N	18.60	16.80	17.58
E	Initial test:5-20N	18.20	17.20	17.26
	After 32 cycles durability test:5N to 20N	16.90	13.60	15.58
	After 10000 cycles durability test:5N to 20N	8.10	6.00	6.70
N	Initial test:5-20N	19.70	17.60	18.34
	After 32 cycles durability test:5~20N	18.4	15.60	17.18
	After 10000 cycles durability and Vibration&physical shock test:5~20N	7.60	6.3	6.76

9.TEST: Durability

UNIT: N

EQUIPMENT: Manually Durability

SPECIFICATION:

Shall meet visual requirement, show no physical damage.

2).Machine insertion 10000 times, manpower insertion 10000 times

3).Forward and reverse of each 5000 times

PROCEDURE:

1).Automatic equipment: 500± 50 cycles.

RESULTS:

1).Appearance is good and no physical damage .

2).All test Samples meet product requirements.

10.TEST:Thermal Shock

UNIT: DEGREE-CENTIGRADE

EQUIPMENT: Thermal Shock TESTER

SPECIFICATION:

1). Shall meet visual requirement, show no physical damage.

2). Shall meet requirements of additional tests as specified in TEST SEQUENCE in Section 5.

PROCEDURE:

-55℃ (30min.), +85℃ (30min.);

5Cycles; Transfer Time -30 seconds maximum

RESULTS:

Appearance is good and no physica damage found

11.TEST: Cyclic Humidity

UNIT: DEGREE CENTIGRADE

EQUIPMENT: Humidity Tester

SPECIFICATION:

Shall meet visual requirement, show no physical damage.

PROCEDURE:

Cycle the connector or socket between 25 °C ± 3 °C at 80 % ± 3% RH and 65 °C ± 3 °C at 50 % ± 3% RH.

Ramp times should be 0.5 hour and dwell times should be 1.0 hour. Dwell times start when the temperature and humidity have stabilized within the specified levels. Perform 24 such cycles.

The object of this test procedure is to detail a standard test method for the evaluation of the designs and materials used in USB Type-C connectors as the effects of high humidity and heat influences them.

RESULTS:

1). No evidence of physical damage after humidity test.

2).All test Samples meet product requirements.

12.EQUIPMENT : Salt Spray (KSON) Salt Spray Tester

Equipment No. :20110709

SPECIFICATION :

There shall be no evidence of physical damage. Contact resistance shall not exceed 50 milliohms.

PROCEDURE :

Subject mated connectors to 48 hours at 35℃± 2℃ with 5%-Salt-solution concentration.

RESULTS:

No evidence of physical damage after humidity test. The contact resistance after test is as follows:

Group	SPEC.	Maximum	Minimum	Average
J	Initial Contact Resistance :40 mΩ Max.	24.72	22.59	23.73
	After Salt Spray test ,Contact Resistance :50mΩ Max.	30.81	22.27	24.05

13.TEST: Temperature Life

UNIT: DEGREECENTIGRADE, MILLIOHM

EQUIPMENT: High Temperature Oven Tester

SPECIFICATION:

1).Shall meet visual requirement, show no physical damage.

2).Shall meet requirements of additional tests as specified in TEST SEQUENCE in Section 5

PROCEDURE:

105℃ without applied voltage for 120hours..

RESULTS:

Appearance is good and no physical damage Structure meet the design and dimensional .

14.Solder Ability

UNIT: COATED SURFACES

EQUIPMENT: K.C SOLDER POT

SPECIFICATION :

The contact solder tail should be covered by a continuous new solder coating for a minimum of 95% of affected area.

PROCEDURE :

After one hour steam aging.Steam Aging .Solder Temperature: 255 ±5°C.Solder Immersion Time: 5 ±0.5 s. The test method complies with EIA 364-52 .

RESULTS:

All solder tails passed solderability test with 95% coverage after one hour steam aging

15.TEST: Thermal Cycling

UNIT: DEGREE CENTIGRADE
EQUIPMENT : Thermal Shock TESTER (KSON)

SPECIFICATION :

There shall be no evidence of physical damage. Contact resistance shall not exceed 50 milliohms.

PROCEDURE :

Cycle Count: 500 Cycles Temperature High:+85℃± 3℃,uncontrolled humidity uncontrolled humidity

Ramp Rate: 2℃/min

Dwell Time: 5 minutes at High and Low temperatures

RESULTS:

No evidence of physical damage after humidity test. The contact resistance after test is as follows:

Group	SPEC.	Maximum	Minimum	Average
D	Initial Contact Resistance:40 mΩ Max.	23.74	21.24	22.43
	AfterThermal Cycling test ,Contact Resistance :50 mΩ Max.	23.74	21.24	22.49

16.TEST: RESISTANCE TO SOLDERING HEAT.

UNIT: VISUAL
EQUIPMENT: SOLDER POT

SPECIFICATION :

The contact solder tail should be covered by a continuous new solder coating for a minimum of 95% of affected area.

PROCEDURE :

Test connector on PCB, Pre-heat: 150 ± 10 ℃, 60 ~120 sec Temperature: 255 ± 5 ℃

Immersion duration: 30 ± 1 sec. The test method complies with EIAJ RCX-0101/102.

RESULTS:

No physical damage to connector per visual inspection at 24inches. No magnification