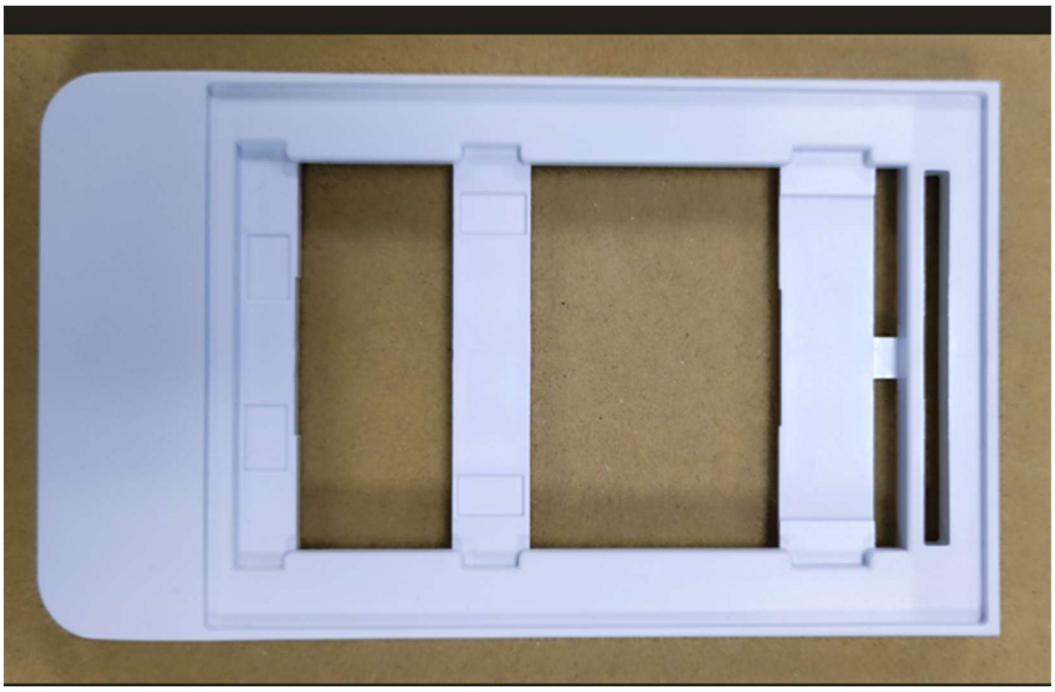

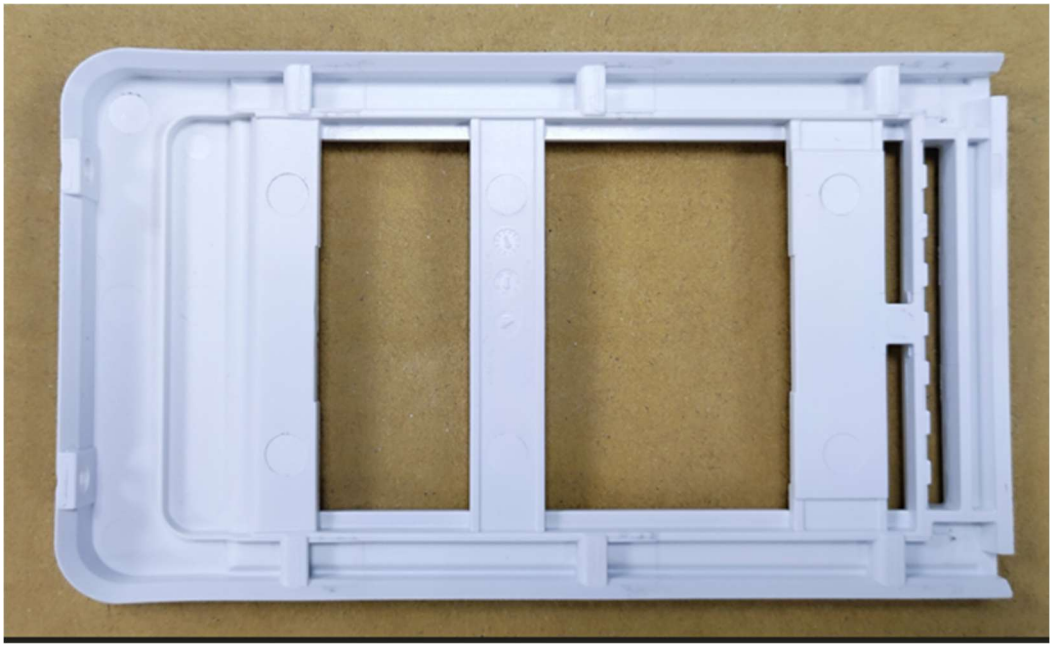

設計驗證
工程課
2025 -04- 07
發行

创意塑胶工业（苏州）有限公司

承 認 書

日　　期　：　2025.2.11

廠　　牌　：　YPI Plastic Industry (Suzhou) Co., Ltd

DIVA料號　：　3MD672P1010 (M3507)

YPI P/N　：　GE0641IN1Y3C（5867868）

廠　　商　：　创意塑胶工业（苏州）有限公司

地　　址　：　中国江苏省苏州市枫桥工业园158-18号

業務代表　：　李秀明

客戶名稱　：　DIVA Laboratories. Ltd.

設計驗證
工程課
2025 -04- 07
發行
鈺緯科技開發股份有限公司

結　　論　：

☐ 初審認可,進行測試
☐ 廠商認可依樣交貨
☐ 依備註條改後,直接認可
☐ 依備註條改後,重新送樣
☐ 不予承認,列入禁用
☐ 其他:

備　　註：

經　　理	主　　管	經　　辦

Document Information for: 5867868DDW

Type	Drawing Print
Name	5867868DDW
Revision	5
State	Released
ECO	MR2385065
Description	BEZEL FRONT -S
Originator	212029866_scott__inman

File List
1. 5867868DDW_rev5.pdf

Approval Information		
Person	**Action**	**Date and Time**
	Approved	
	Approved	
212041600_joe__bexson	Approved	8/7/2024 1:52:26 PM
212029866_scott__inman	Approved	8/9/2024 1:27:25 PM
212042870_michael__jones	Approved	8/8/2024 4:17:44 PM
212564784_adriana__jimenez avalos	Approved	8/19/2024 1:13:50 PM
212737401_alexandre__moulin	Approved	8/9/2024 4:02:27 PM
212781509_rafael__rodriguez	Approved	8/20/2024 2:07:20 PM
212576425_jeffrey__brown	Approved	8/13/2024 1:33:44 PM
212050530_mark__frowein	Approved	8/9/2024 9:28:02 PM
212029749_scott__komplin	Approved	8/15/2024 2:16:06 PM
223079159_holly__gile	Approved	8/13/2024 6:07:28 PM
223079159_holly__gile	Approved	8/13/2024 6:07:28 PM
223079159_holly__gile	Approved	8/13/2024 6:07:28 PM
223079159_holly__gile	Approved	8/13/2024 6:07:28 PM
223105848_meg__mulvihill	Approved	8/20/2024 4:11:19 PM

This page is generated automatically by the GEHC MyWorkshop System.
Printed documents are for Reference Only and may be out-of-date.
Check the database to ensure you have the correct revision.

State - Released (Production) Release Date (02-Apr-2024) MR2385065
Approval details stored in the electronic master, the Global MWS PLM System

5867868

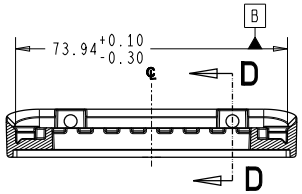

SECTION C-C

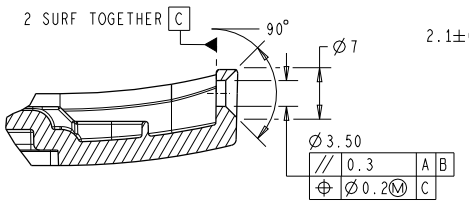

SECTION D-D
SCALE 2/1
2 PLACES

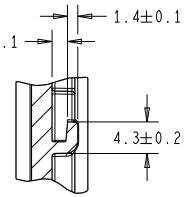

DETAIL A
SCALE 2/1
6 PLACES

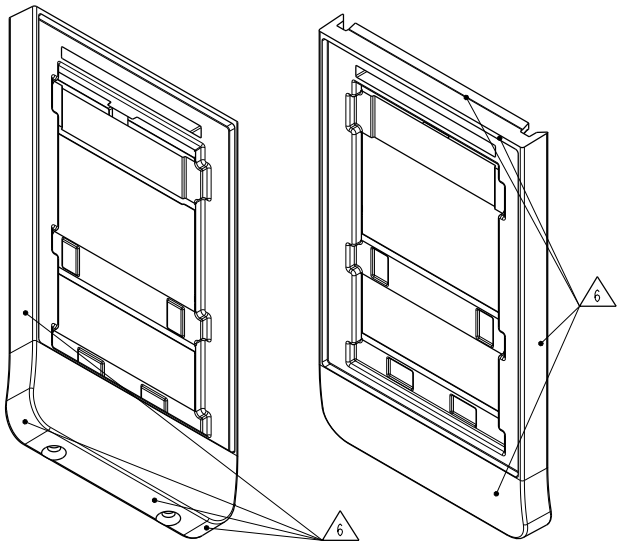

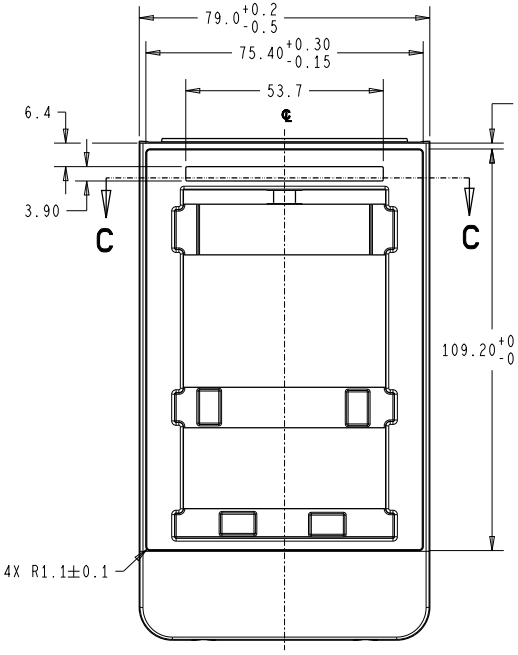

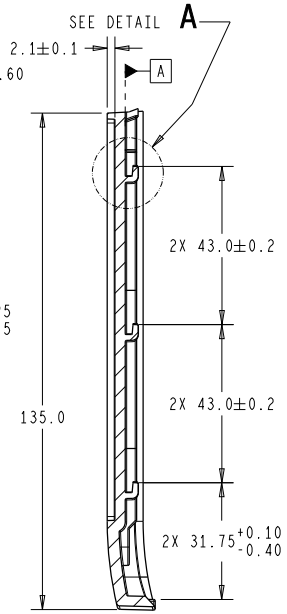

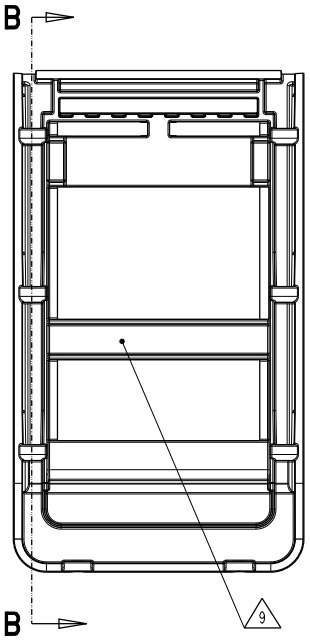

SECTION B-B

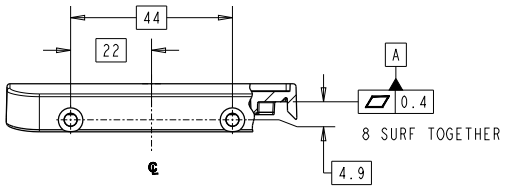

NOTES:

1. COMPLETE PART DEFINED BY GEHC Pro/ENGINEER DATABASE WHICH CONSISTS OF THIS DRAWING AND THE CAD MODEL. CAD DATA TO BE FURNISHED BY GEHC AND PART NUMBER, REVISION AND REVISION DATE LABELING MUST CORRELATE TO DRAWING
2. TOLERANCES FOR UNDIMENSIONED FEATURES SHALL BE EQUAL TO COMMERICAL TOLERANCES AS SPECIFIED BY THE SOCIETY OF PLASTICS INDUSTRY, INC
3. MATERIAL: PPA6/6 PEMARON 660G6 03 30%GF WHITE MUNSELL N9
4. ALL DIMENSIONS +DRAFT UNLESS OTHERWISE SPECIFIED
5. NO SHARP EDGES OR CORNERS: 0.3-0.5 BREAK
6. SURFACE FINISH GRADE 1 OR BETTER WITH TEXTURE PER MOLD TECH MT-1055-1 ON INDICATED SURFACES. ALL OTHER SURFACE FINISH GRADE 2 OR BETTER UNLESS OTHERWISE SPECIFIED PER 1010-0196-000
7. MAXIMUM FLASH PERMISSIBLE 0.1 WIDE X 0.1 HIGH
8. EJECTOR PIN AND GATE HEIGHTS TO BE FLUSH TO 0.5 RECESSED
9. ON SURFACE INDICATED PART TO BE MARKED WITH ">PA6/6+30GF<", PART NUMBER, DATE CODE INDICATING MONTH AND YEAR OF MANUFACTURE. ALL NUMBERS OR CHARACTERS RAISED 0.4 MAXIMUM
10. GATES, PARTING LINES AND EJECTOR PIN LOCATIONS MUST BE APPROVED BY GEHC
11. RoHS COMPLIANCE PER 5240305GSP - DOCUMENTATION LEVEL 3 OR HIGHER

設計驗證
工程課
2025 -04- 07
發行
鈺緯科技開發股份有限公司

3MD672P1010(M3507)

5	(D4) WAS 79.0+0.1/-0.4 (D4) WAS 73.94±0.15 (B3) WAS 31.75±0.25 (A3) FLATNESS WAS 0.5	12-MAR-2024 SAI
Rev	(Zone) Revisions	Change No

46-274914	PART AND CONFORMANCE MARKING
5240305GSP	RoHS REQUIREMENTS
1010-0196-000	SPEC MANUFACTURING PRACTICES

DRAWN BY: SAI	DATE: 06-DEC-2020	GE HealthCare
SCALE: 1/1	SHEET: 1 OF 1	Copyright © 2024 GE HealthCare
INSP. KEY: ITEMS INDICATED TO BE PART OF SUPPLIER INSPECTION PLAN.	THIRD ANGLE PJTN	DWG SIZE: C
TITLE: BEZEL FRONT -S		
MATERIAL: SEE NOTES		PART NUMBER: 5867868

DO NOT SCALE DRAWING
METRIC DRAWING
DIMENSIONS ARE MILLIMETERS UNLESS OTHERWISE SPECIFIED
TOLERANCES AND FINISHES UNLESS OTHERWISE SPECIFIED:
1) X ±0.5
X.X ±0.3
X.XX ±0.15
∠ ±1°
2) MACH $\sqrt{}$ 3.2

THIS DOCUMENT CONTAINS CONFIDENTIAL OR PROPRIETARY INFORMATION OF GE HealthCare OR ITS AFFILIATES. NEITHER THE DOCUMENT NOR THE INFORMATION THEREIN IS TO BE REPRODUCED, DISTRIBUTED, USED OR DISCLOSED, EITHER IN WHOLE OR PART, EXCEPT AS SPECIFICALLY AUTHORIZED IN WRITING BY GE HealthCare AND MUST BE RETURNED UPON REQUEST. GE IS A REGISTERED TRADEMARK OF GENERAL ELECTRIC COMPANY USED UNDER TRADEMARK LICENSE.

State - Released (Production) Release Date (02-Apr-2024) MR2385065
Approval details stored in the electronic record, the Global MWS PLM System

5867868

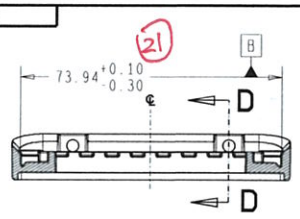

SECTION C-C

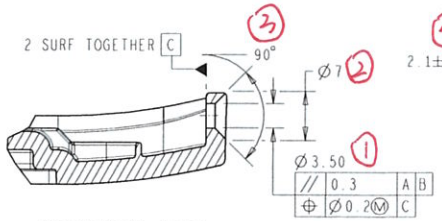

SECTION D-D
SCALE 2/1
2 PLACES

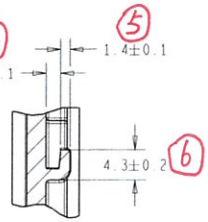

DETAIL A
SCALE 2/1
6 PLACES

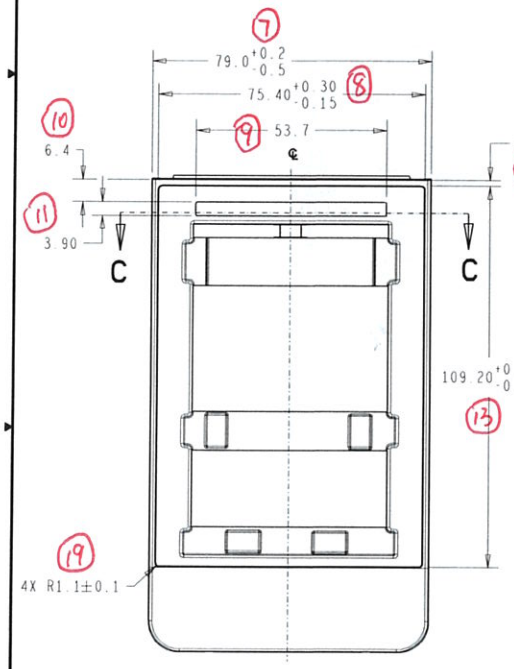

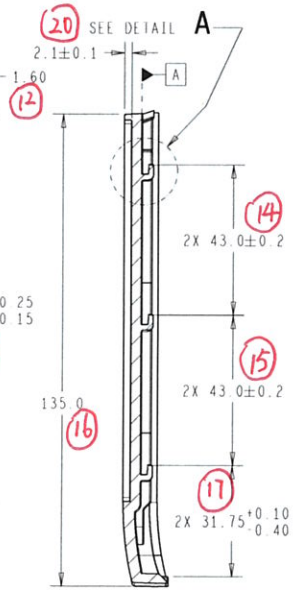

SECTION B-B

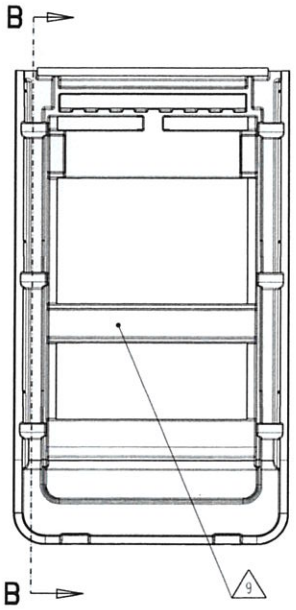

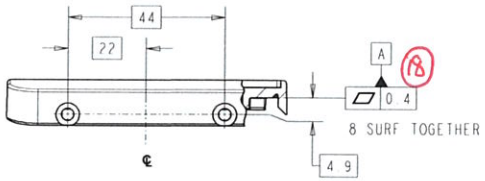

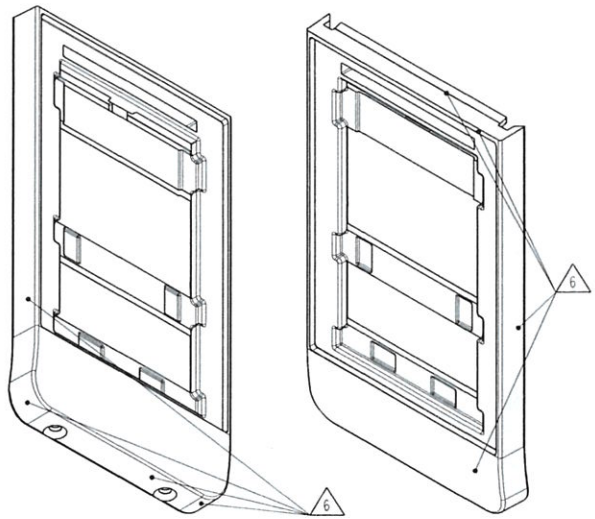

NOTES:

1. COMPLETE PART DEFINED BY GEHC Pro/ENGINEER DATABASE WHICH CONSISTS OF THIS DRAWING AND THE CAD MODEL. CAD DATA TO BE FURNISHED BY GEHC AND PART NUMBER, REVISION AND REVISION DATE LABELING MUST CORRELATE TO DRAWING
2. TOLERANCES FOR UNDIMENSIONED FEATURES SHALL BE EQUAL TO COMMERICAL TOLERANCES AS SPECIFIED BY THE SOCIETY OF PLASTICS INDUSTRY, INC
3. MATERIAL: PPA6/6 PEMARON 660G6 03 30%GF WHITE MUNSELL N9
4. ALL DIMENSIONS +DRAFT UNLESS OTHERWISE SPECIFIED
5. NO SHARP EDGES OR CORNERS: 0.3-0.5 BREAK
6. SURFACE FINISH GRADE 1 OR BETTER WITH TEXTURE PER MOLD TECH MT-1055-1 ON INDICATED SURFACES. ALL OTHER SURFACE FINISH GRADE 2 OR BETTER UNLESS OTHERWISE SPECIFIED PER 1010-0196-000
7. MAXIMUM FLASH PERMISSIBLE 0.1 WIDE X 0.1 HIGH
8. EJECTOR PIN AND GATE HEIGHTS TO BE FLUSH TO 0.5 RECESSED
9. ON SURFACE INDICATED PART TO BE MARKED WITH ">PA6/6+30GF<", PART NUMBER, DATE CODE INDICATING MONTH AND YEAR OF MANUFACTURE. ALL NUMBERS OR CHARACTERS RAISED 0.4 MAXIMUM
10. GATES, PARTING LINES AND EJECTOR PIN LOCATIONS MUST BE APPROVED BY GEHC
11. RoHS COMPLIANCE PER 5240305GSP - DOCUMENTATION LEVEL 3 OR HIGHER

Rev	(Zone)	Revisions	Change No
5		(D4) WAS 79.0+0.1/-0.4 (D4) WAS 73.94±0.15 (B3) WAS 31.75±0.25 (A3) FLATNESS WAS 0.5	12-MAR-2024 SAI

46-274914	PART AND CONFORMANCE MARKING
5240305GSP	RoHS REQUIREMENTS
1010-0196-000	SPEC MANUFACTURING PRACTICES

DRAWN BY: SAI	DATE: 06-DEC-2020	GE HealthCare	
SCALE: 1/1	SHEET: 1 OF 1	Copyright © 2024 GE HealthCare	
DO NOT SCALE DRAWING METRIC DRAWING DIMENSIONS ARE MILLIMETERS UNLESS OTHERWISE SPECIFIED TOLERANCES AND FINISHES UNLESS OTHERWISE SPECIFIED .1 X ±0.5 .X ±0.3 .XX ±0.15 ANGLES ±1° .21 MACH µm 3.2√	INSP KEY ITEMS INDICATED TO BE PART OF SUPPLIER INSPECTION PLAN	THIRD ANGLE PROJECTION	DWG SIZE: C TITLE: BEZEL FRONT -S MATERIAL: SEE NOTES PART NUMBER: 5867868

THIS DOCUMENT CONTAINS CONFIDENTIAL OR PROPRIETARY INFORMATION OF GE HealthCare OR ITS AFFILIATES. NEITHER THE DOCUMENT NOR THE INFORMATION THEREIN IS TO BE REPRODUCED, DISTRIBUTED, USED OR DISCLOSED, EITHER IN WHOLE OR PART, EXCEPT AS SPECIFICALLY AUTHORIZED IN WRITING BY GE HealthCare AND MUST BE RETURNED UPON REQUEST. GE IS A REGISTERED TRADEMARK OF GENERAL ELECTRIC COMPANY USED UNDER A TRADEMARK LICENSE.

Status - Released (Development). Release Date: 02-Apr-2024. ERO: 15856
Approval details stored in the electronic rather, the Global MVS PLM System